COLOR LASERJET ENTERPRISE CP4020/CP4520

SERIES PRINTER

Service Manual

CP4025n
CP4025dn
CP4525n
CP4525dn
CP4525xh

HP Color LaserJet Enterprise CP4020-CP4520 Series Printers

Service Manual

Copyright and License

© 2009 Copyright Hewlett-Packard Development Company, L.P.

Reproduction, adaptation, or translation without prior written permission is prohibited, except as allowed under the copyright laws.

The information contained herein is subject to change without notice.

The only warranties for HP products and services are set forth in the express warranty statements accompanying such products and services. Nothing herein should be construed as constituting an additional warranty. HP shall not be liable for technical or editorial errors or omissions contained herein.

Part number: CC489-90936

Edition 1, 10/2009

Trademark Credits

Adobe®, Acrobat®, and PostScript® are trademarks of Adobe Systems Incorporated.

Corel® is a trademark or registered trademark of Corel Corporation or Corel Corporation Limited.

Intel® Core™ is a trademark of Intel Corporation in the U.S. and other countries.

Java™ is a US trademark of Sun Microsystems, Inc.

Microsoft®, Windows®, Windows® XP, and Windows Vista® are U.S. registered trademarks of Microsoft Corporation.

PANTONE® is Pantone, Inc's check-standard trademark for color.

UNIX® is a registered trademark of The Open Group.

ENERGY STAR and the ENERGY STAR mark are registered U.S. marks.

Conventions used in this guide

TIP: Tips provide helpful hints or shortcuts.

NOTE: Notes provide important information to explain a concept or to complete a task.

CAUTION: Cautions indicate procedures that you should follow to avoid losing data or damaging the product.

WARNING! Warnings alert you to specific procedures that you should follow to avoid personal injury, catastrophic loss of data, or extensive damage to the product.

Table of contents

1 Theory of operation

Basic operation 2
Sequence of operation 3
Engine-control system 4
DC controller 5
Solenoids 5
Clutches 6
Switches 6
Sensors 7
Motors 8
Fans 9
High-voltage power supply 10
Low-voltage power supply 12
Overcurrent/overvoltage protection 13
Safety 13
Voltage detection 13
Sleep (powersave) mode 13
Low-voltage power supply failure 13
Fuser control 14
Fuser temperature control 15
Fuser sleeve temperature protection 15
Failure detection 16
Fuser unit identification 17
Fuser unit life detection 17
Laser/scanner system 18
Laser/scanner failure 19
Protective-glass cleaners 19
Image-formation system 21
Image-formation process 22
Step 1: Pre-exposure 24
Step 2: Primary charging 24
Step 3: Laser-beam exposure 25
Step 4: Development 25
Step 5: Primary transfer 26

Step 6: Secondary transfer 26
Step 7: Separation 27
Step 8: Fusing 27
Step 9: ITB cleaning 28
Step 10: Drum cleaning 28
Print cartridge 28
Developing-roller engagement and disengagement 30
Intermediate transfer belt (ITB) unit 31
Primary-transfer-roller engagement and disengagement 32
ITB cleaning 34
Calibration 34
Color-misregistration control 35
Image-stabilization control 35
Pickup, feed, and delivery system 37
Pickup-and-feed unit 41
Cassette pickup 41
Cassette-presence detection 42
Cassette lift operation and cassette paper-presence detection 43
Cassette multiple-feed prevention 43
Multipurpose tray pickup 44
Paper feed 45
Skew-feed prevention 46
Paper detection 47
Feed speed control 48
Fusing and delivery unit 48
Loop control 49
Pressure-roller pressurization control 50
Duplexing unit (HP Color LaserJet CP4525dn, HP Color LaserJet CP4025dn, and HP Color LaserJet CP4525xh only) 52
Duplexing reverse and feed control 52
Duplex print operation 53
Jam detection 55
Optional paper feeder 57
Motor control 59
Paper-feeder pickup and feed operation 60
Paper-size detection and cassette-presence detection 62
Paper-feeder cassette lift operation 63
Paper feeder jam detection 64

2 Removal and replacement

Introduction 68
Removal and replacement strategy 68
Electrostatic discharge 69
Required tools 69

Before performing service 70
After performing service 70
Post-service test 71
Print-quality test 71
Parts removal order 72
Customer self repair (CSR) components 74
Print cartridges 74
Toner-collection unit 76
Formatter PCA 78
Hard drive 79
Remove the hard drive 79
Memory DIMM 81
Remove the memory DIMM 81
Enable memory 82
Tray 84
Fuser 85
Feed and separation rollers (Trays 2-5) 86
Pickup roller (Tray 1) 87
Secondary transfer roller 90
Reinstall the transfer roller 91
Intermediate transfer belt (ITB) 92
External panels, covers, and doors 95
Identification and location 95
Upper-left cover 96
Power-supply cover 98
Left cover 99
Remove the left cover 99
Front-top cover 100
Remove the front-top cover 100
Rear-top cover 102
Remove the rear-top cover 102
Right-front cover 103
Remove the right-front cover 103
Reinstall the power button 104
Control-panel assembly 105
Remove the control-panel assembly 105
Front-door assembly 107
Remove the front-door assembly 107
Right-rear cover 110
Remove the right-rear cover 110
Rear cover 112
Remove the rear cover 112
Right-door assembly 113
Internal assemblies 118

Cassette feed guide 118
Secondary transfer assembly 119
Reinstall the secondary transfer assembly 120
Separation pad (Tray 1) 121
Remove the separation pad (Tray 1) 121
Registration density (RD) sensor assembly 124
Remove the RD sensor assembly 124
Registration assembly 128
Remove the registration assembly 129
Residual-toner-feed motor 133
Remove the residual-toner-feed motor 133
Residual-toner duct and feed assembly 134
Remove the residual-toner duct and feed assembly 134
Cartridge fan and environmental sensor 137
Remove the cartridge fan and environmental sensor 137
Toner-collection sensor and scanner-thermistor assembly 141
Remove the toner-collection sensor and scanner-thermistor assembly 141
Delivery fan 143
Remove the delivery fan 143
Delivery assembly 145
Remove the delivery assembly 145
Reinstall the delivery assembly 149
Duplex-drive assembly 151
Remove the duplex-drive assembly 151
Power-supply fan 152
Remove the power-supply fan 152
Interconnect board (ICB) 153
Remove the ICB 153
DC controller PCA only 155
Remove the DC controller PCA only 155
Low-voltage power supply (LVPS) 157
Remove the low-voltage power supply 157
DC controller PCA and tray 161
Remove the DC controller PCA and tray 161
High-voltage power supply lower (HVPS-D) 163
Remove the high-voltage power supply lower 163
Reinstall the high-voltage power supply lower 167
Developing-disengagement motor 168
Remove the developing-disengagement motor 168
Exhaust fan and fan duct 169
Remove the exhaust fan and fan duct 169
Reinstall the exhaust fan and fan duct 171
Pickup motor 172
Remove the pickup motor 172

Lifter-drive assembly 173
Remove the lifter-drive assembly 173
Lifter base assembly 175
Remove the lifter base assembly 175
Reinstall the lifter base assembly 176
Tray-pickup drive assembly 178
Remove the tray-pickup drive assembly 178
Tray-pickup assembly 180
Remove the tray-pickup assembly 180
Laser/scanner assembly (Y/M) 186
Remove the laser/scanner assembly (Y/M) 187
Laser/scanner assembly (C/Bk) 190
Remove the laser/scanner assembly (C/Bk) 191
Reinstall the protective glass cleaner (PGC) actuators 193
High-voltage power supply upper (HVPS-T) 196
Remove the high-voltage power supply upper 196
Reinstall the high-voltage power supply upper 198
Yellow, magenta, cyan, and black drum motors 199
Remove the yellow, magenta, cyan, and black drum motors 199
Fuser motor 200
Remove the fuser motor 201
ITB motor 202
Remove the ITB motor 202
Main-drive assembly 203
Remove the main-drive assembly 204
Reinstall the main-drive assembly 207
Fuser-drive assembly 211
Remove the fuser-drive assembly 212
Reinstall the fuser-drive assembly 215
Optional paper feeder assemblies (1 x 500-sheet and 3 x 500-sheet) 216
Front door (optional paper feeder) 216
Rear cover (optional paper feeder) 218
Right-front cover (optional paper feeder) 219
Right door (optional paper feeder) 220
Left cover (optional paper feeder) 222
Remove the left cover (optional paper feeder) 222
Right cover (optional paper feeder) 224
Remove the right cover (optional paper feeder) 224
Rear-right cover (optional paper feeder) 225
Remove the rear-right cover (optional paper feeder) 225
Pickup assembly (optional paper feeder) 226
Remove the pickup assembly (optional paper feeder) 226
Lifter assembly (optional paper feeder) 229
Remove the lifter assembly (optional paper feeder) 229

Lifter-drive assembly (optional paper feeder) 230
Remove the lifter-drive assembly (optional paper feeder) 230
Pickup motor assembly (optional paper feeder) 231
Remove the pickup motor (optional paper feeder) assembly 231
Controller PCA (optional paper feeder) 232
Remove the controller PCA (optional paper feeder) 232

3 Solve problems

Solve problems checklist 234
Menu map 236
Troubleshooting process 237
Determine the problem source 237
Pre-troubleshooting checklist 237
Troubleshooting flowchart 239
Power subsystem 240
Power-on checks 240
Power-on troubleshooting overview 240
Tools for troubleshooting 242
Individual component diagnostics 242
LED diagnostics 242
Understand lights on the formatter 242
Engine diagnostics 243
Defeating interlocks 243
Disable cartridge check 244
Engine-test button 244
Paper-path test 245
Manual sensor test (special-mode test) 246
A TOP (top of page) sensor 247
B and C loop sensors 248
D fuser delivery sensor 249
E duplex re-pickup sensor 250
F output bin full sensor 251
I developer alienation 252
J fuser pressure-release sensor 253
K primary transfer-roller-disengagement sensor 254
L media sensor 256
M front-door switch 257
N right-door switch 258
Manual sensor test 2 (special-mode test) 259
O Tray 1 paper present sensor 261
P Tray 2 paper present sensor 262
Q Tray 2 paper surface 1 and 2 sensors 263
R Tray 2 paper size switches 264

S Tray 3 paper present sensor 265
T Tray 3 feed sensor 265
U Tray 3 paper surface 1 and 2 sensors 265
V Tray 3 paper size switches 265
W Tray 4 paper present sensor 265
X Tray 4 feed sensor 265
Y Tray 4 paper surface 1 and 2 sensors 265
Z Tray 4 paper size switches 266
a Tray 5 paper present sensor 266
b Tray 5 feed sensor 266
c Tray 5 paper surface 1 and 2 sensors 266
d Tray 5 paper size switches 266
5V laser and 24V interlock and logic switches (and power switch) 267
New ITB sensor 271
Tray 3, 4, and 5 right door switch 272
Paper-path sensors test 273
Print/stop test 273
Component tests 274
Component test (special-mode test) 274
Diagrams 277
Block diagrams 277
Plug/jack locations 280
Location of connectors 281
DC controller connector locations 281
Controller PCA (1 x 500-sheet and 3 x 500-sheet optional paper feeders) 283
Locations of major components 284
General timing chart 294
Circuit diagrams 294
HP Easy Printer Care 298
Open the HP Easy Printer Care software 299
HP Easy Printer Care software sections 299
Internal print-quality test pages 302
Print-quality-troubleshooting pages 302
Diagnostics page 305
Cleaning page 306
Configuration page 307
Configuration page 307
HP embedded Jetdirect page 309
Embedded protocol page 310
Finding important information on the configuration pages 311
Color-band test 311
Print-quality troubleshooting tools 312

Repetitive defects ruler ... 312
Calibrate the product ... 313
Control panel menus ... 314
Control panel menus ... 314
Show Me How menu ... 314
Retrieve job menu ... 314
Information menu ... 317
Paper handling menu ... 317
Manage supplies menu ... 318
Configure device menu ... 321
Diagnostics menu ... 342
Service menu ... 344
Interpret control-panel messages ... 345
Control-panel message types ... 345
Control-panel messages ... 345
Event log messages ... 376
Print an event log ... 376
Show an event log ... 376
Sample event log ... 377
Clear the event log ... 377
Event log message table ... 378
Clear paper jams ... 383
Common causes of jams ... 383
Jam locations ... 386
Clear jams in the right door ... 387
Clear jams in the output bin area ... 390
Clear jams in Tray 1 ... 390
Clear jams in Tray 2 or optional Trays 3, 4, or 5 ... 392
Clear jams in the lower right door (Tray 3, 4, or 5) ... 393
Jam causes and solutions ... 394
Jams in the output bin ... 394
Jams in the fuser and transfer area ... 394
Jams in the duplex area (HP Color LaserJet CP4525dn, HP Color LaserJet CP4025dn, and HP Color LaserJet CP4525xh only) ... 397
Jams in Tray 1, Tray 2 and internal paper path ... 399
Jams in Tray 3, 4, and 5 ... 400
Change jam recovery ... 402
Solve paper-handling problems ... 403
Product feeds multiple sheets ... 403
Product feeds incorrect page size ... 403
Product pulls from incorrect tray ... 403
Paper does not feed automatically ... 404
Paper does not feed from Tray 2, 3, 4, or 5 ... 404
Transparencies or glossy paper will not feed ... 405

Envelopes jam or will not feed in the product 405
Output is curled or wrinkled 406
Product will not duplex or duplexes incorrectly 406
Use manual print modes 408
Solve image-quality problems 410
Image defects table 410
Clean the product 416
Clean the paper path 416
Solve performance problems 417
Solve connectivity problems 418
Solve direct-connect problems 418
Solve network problems 418
Service mode functions 420
Service menu 420
Product resets 423
Restore factory-set defaults 423
Hard disk initialization (optional) 423
NVRAM initialization 423
Product cold reset 424
Product updates 424

4 Parts and diagrams

Order parts, accessories, and supplies 426
Part numbers 427
Accessories 427
Print cartridges and toner collection unit 427
Memory 427
Cables and interfaces 427
Customer self repair (CSR) parts 428
Service maintenance kits 428
Unique components 429
Screws 430
How to use the parts lists and diagrams 431
External covers, panels, and doors 432
Right door assembly 434
Front door assembly 436
Internal components 438
Internal components (1 of 7) 438
Internal components (2 of 7) 440
Internal components (3 of 7) 442
Internal components (4 of 7) 444
Internal components (5 of 7) 446
Internal components (6 of 7) 448

Internal components (7 of 7) 450
Cassettes 2-5 452
Paper pickup assembly 454
Tray 1 paper pickup assembly 456
Registration assembly 458
Secondary transfer assembly 460
Delivery assembly 462
Fuser assembly 464
PCAs 466
Assessories 468
Paper feeders 468
Paper feeder external covers, panels, and doors 470
1 X 500 paper feeder main body 472
3 X 500 paper feeder main body 474
Alphabetical parts list 476
Numerical parts list 484

Appendix A Service and support

Hewlett-Packard limited warranty statement 494
HP's Premium Protection Warranty: LaserJet print cartridge limited warranty statement 495
HP Color LaserJet Fuser Kit Limited Warranty Statement 496
End User License Agreement 497
Customer self-repair warranty service 499
Customer support 500

Appendix B Product specifications

Physical specifications 502
Performance specifications 502
Electrical specifications 502
Acoustic specifications 503
Environmental specifications 503
Skew specifications 504

Appendix C Regulatory information

FCC regulations 506
Environmental product stewardship program 507
Protecting the environment 507
Ozone production 507
Power consumption 507
Toner consumption 507
Paper use 507
Plastics 507
HP LaserJet print supplies 507

Return and recycling instructions 508
United States and Puerto Rico 508
Multiple returns (more than one cartridge) 508
Single returns 508
Shipping 508
Non-U.S. returns 508
Paper 508
Material restrictions 509
Disposal of waste equipment by users in private households in the European Union 509
Chemical substances 509
Material Safety Data Sheet (MSDS) 510
For more information 510
Declaration of Conformity 511
Safety statements 512
Laser safety 512
Canadian DOC regulations 512
VCCI statement (Japan) 512
Power cord instructions 512
Power cord statement (Japan) 512
EMC statement (China) 513
EMC statement (Korea) 513
EMI statement (Taiwan) 513
Laser statement for Finland 513
GS statement (Germany) 514
Substances Table (China) 514
Restriction on Hazardous Substances statement (Turkey) 514

Index 515

List of tables

Table 1-1 Sequence of operation ... 3
Table 1-2 Solenoids ... 5
Table 1-3 Switches ... 6
Table 1-4 Sensors ... 7
Table 1-5 Motors ... 8
Table 1-6 Fans ... 9
Table 1-7 High-voltage power supply circuits ... 10
Table 1-8 Converted DC voltages ... 12
Table 1-9 Fuser components ... 14
Table 1-10 Primary-transfer-roller engagement states ... 32
Table 1-11 Image-stabilization controls ... 36
Table 1-12 Switches and sensors for the pickup, feed, and delivery system ... 38
Table 1-13 Motors and solenoids for the pickup, feed, and delivery system ... 39
Table 1-14 Print mode and feed speed ... 48
Table 1-15 Paper sizes ... 53
Table 1-16 Jams that the product detects ... 56
Table 1-17 Electrical components for the paper feeder ... 59
Table 1-18 Pickup feed components (1 x 500-sheet paper feeder) ... 60
Table 3-1 Pre-troubleshooting checklist ... 237
Table 3-2 Troubleshooting flowchart ... 239
Table 3-3 Manual sensor diagnostic tests ... 246
Table 3-4 Default state of bits ... 246
Table 3-5 Manual sensor test 2 diagnostic tests ... 259
Table 3-6 Default state of bits ... 260
Table 3-7 Paper-path sensors diagnostic tests ... 273
Table 3-8 Component test details ... 274
Table 3-9 Formatter PCA ... 280
Table 3-10 DC controller connectors ... 281
Table 3-11 Controller PCA connectors ... 283
Table 3-12 Important information on the configuration pages ... 311
Table 3-13 Embedded Jetdirect menu ... 334
Table 3-14 Control-panel messages ... 345
Table 3-15 Common causes of jams (by area) ... 385
Table 3-16 Causes and solutions for delivery delay jam ... 394

Table 3-17 Causes and solutions for fuser delivery delay jams 394
Table 3-18 Causes and solutions for wrapping jams 394
Table 3-19 Causes and solutions for fuser delivery stationary jams 395
Table 3-20 Causes and solutions for residual media jams 396
Table 3-21 Causes and solutions for pickup delay jams 2 396
Table 3-22 Causes and solutions for pickup stationary jams 397
Table 3-23 Causes and solutions for duplexing reverse jams 397
Table 3-24 Causes and solutions for duplex repick jams 397
Table 3-25 Causes and solutions for residual media jams 398
Table 3-26 Causes and solutions for pickup delay jam 1: tray pickup 399
Table 3-27 Causes and solutions for pickup stationary jams 400
Table 3-28 Causes and solutions for pickup delay and pickup stationary jams 400
Table 3-29 Causes and solutions for residual media jams 401
Table 3-30 MP modes under the **ADJUST PAPER TYPES** sub menu 408
Table 3-31 MP modes under the **OPTIMIZE** submenu 409
Table 4-1 Maintenance kits 428
Table 4-2 110V and 220V unique components 429
Table 4-3 Simplex and duplex unique components 429
Table 4-4 Common fasteners 430
Table 4-5 External covers, panels, and doors; 433
Table 4-6 Right door assembly 435
Table 4-7 Front door assembly 437
Table 4-8 Internal components (1 of 7) 439
Table 4-9 Internal components (2 of 7) 441
Table 4-10 Internal components (3 of 7) 443
Table 4-11 Internal components (4 of 7) 445
Table 4-12 Internal components (5 of 7) 447
Table 4-13 Internal components 6 of 7 449
Table 4-14 Internal components 7 of 7 451
Table 4-15 Cassette 453
Table 4-16 Paper pickup assembly 455
Table 4-17 Tray 1 paper pickup assembly 457
Table 4-18 Registration assembly 459
Table 4-19 Secondary Transfer assembly 461
Table 4-20 Delivery assembly 463
Table 4-21 Fuser assembly 465
Table 4-22 PCAs 467
Table 4-23 Paper feeders 469
Table 4-24 Paper feeder external covers, panels, and doors 471
Table 4-25 1 X 500 paper feeder main body 473
Table 4-26 3 X 500 paper feeder main body 475
Table 4-27 Alphabetical parts list 476
Table 4-28 Numerical parts list 484
Table B-1 Product dimensions 502

Table B-2 Product dimensions, with all doors and trays fully opened 502
Table B-3 Power requirements 503
Table B-4 Power consumption (average, in watts)[1246] 503
Table B-5 HP Color LaserJet Enterprise CP4020-CP4520 Series[13] 503
Table B-6 Media registration and image placement accuracy 504

List of figures

Figure 1-1 Relationship between the main product systems 2
Figure 1-2 Engine-control system 4
Figure 1-3 DC controller block diagram 5
Figure 1-4 High-voltage power supply circuits 10
Figure 1-5 Low-voltage power-supply circuit 12
Figure 1-6 Fuser components 14
Figure 1-7 Fuser temperature-control circuit 15
Figure 1-8 Laser/scanner system 18
Figure 1-9 Protective-glass cleaners (PGCs) 20
Figure 1-10 Image-formation system 21
Figure 1-11 Image-formation drive system 22
Figure 1-12 Image-formation process 23
Figure 1-13 Pre-exposure 24
Figure 1-14 Primary charging 24
Figure 1-15 Laser-beam exposure 25
Figure 1-16 Development 25
Figure 1-17 Primary transfer 26
Figure 1-18 Secondary transfer 26
Figure 1-19 Separation 27
Figure 1-20 Fusing 27
Figure 1-21 ITB cleaning 28
Figure 1-22 Drum cleaning 28
Figure 1-23 Print-cartridge system 29
Figure 1-24 Developing-roller engagement and disengagement control 30
Figure 1-25 ITB unit 31
Figure 1-26 Three states of primary-transfer-roller engagement and disengagement 33
Figure 1-27 ITB cleaning process 34
Figure 1-28 Toner patterns for calibration 35
Figure 1-29 Paper path 37
Figure 1-30 Switches and sensors for the pickup, feed, and delivery system 38
Figure 1-31 Motors and solenoids for the pickup, feed, and delivery system 39
Figure 1-32 Three main units of the pickup, feed, and delivery system 40
Figure 1-33 Pickup-and-feed unit 41
Figure 1-34 Cassette-pickup mechanism 42

Figure 1-35 Cassette lift mechanism 43
Figure 1-36 Multiple-feed prevention 44
Figure 1-37 Multipurpose tray pickup mechanism 45
Figure 1-38 Paper-feed mechanism 46
Figure 1-39 Skew-feed prevention 47
Figure 1-40 Fuser and delivery unit 49
Figure 1-41 Loop-control mechanism 50
Figure 1-42 Pressure-roller pressurization control 51
Figure 1-43 Duplexing unit 52
Figure 1-44 Duplex reverse and feed control 53
Figure 1-45 Jam detection sensors 55
Figure 1-46 1 x 500 optional paper feeder 57
Figure 1-47 3 x 500-sheet optional paper feeder 58
Figure 1-48 Signals for the paper feeder 58
Figure 1-49 Paper-feeder pickup and feed operation 60
Figure 1-50 Paper-feeder cassette lift 63
Figure 1-51 Jam detection (1 x 500-sheet paper feeder) 64
Figure 1-52 Jam detection (3 x 500-sheet paper feeder) 65
Figure 2-1 Phillips and pozidrive screwdriver comparison 69
Figure 2-2 Parts removal order (1 of 2) 72
Figure 2-3 Parts removal order (2 of 2) 73
Figure 2-4 Remove the print cartridge (1 of 2) 74
Figure 2-5 Remove the print cartridge (2 of 2) 75
Figure 2-6 Remove the toner-collection unit (1 of 4) 76
Figure 2-7 Remove the toner-collection unit (2 of 4) 76
Figure 2-8 Remove the toner-collection unit (3 of 4) 77
Figure 2-9 Remove the toner-collection unit (4 of 4) 77
Figure 2-10 Remove the formatter 78
Figure 2-11 Remove the hard drive (1 of 3) 79
Figure 2-12 Remove the hard drive (2 of 3) 79
Figure 2-13 Remove the hard drive (3 of 3) 80
Figure 2-14 Remove the memory DIMM (1 of 2) 81
Figure 2-15 Remove the memory DIMM (2 of 2) 82
Figure 2-16 Remove the tray (1 of 2) 84
Figure 2-17 Remove the tray (2 of 2) 84
Figure 2-18 Remove the fuser (1 of 2) 85
Figure 2-19 Remove the fuser (2 of 2) 85
Figure 2-20 Remove the Pickup and feed rollers (Trays 2-5) 86
Figure 2-21 Remove the pickup roller (Tray 1) (1 of 5) 87
Figure 2-22 Remove the pickup roller (Tray 1) (2 of 5) 87
Figure 2-23 Remove the pickup roller (Tray 1) (3 of 5) 88
Figure 2-24 Remove the pickup roller (Tray 1) (4 of 5) 88
Figure 2-25 Remove the pickup roller (Tray 1) (5 of 5) 89
Figure 2-26 Remove the transfer roller (1 of 3) 90

Figure 2-27 Remove the transfer roller (2 of 3) 90
Figure 2-28 Remove the transfer roller (3 of 3) 91
Figure 2-29 Reinstall the transfer roller 91
Figure 2-30 Remove the intermediate transfer belt (1 of 4) 92
Figure 2-31 Remove the intermediate transfer belt (2 of 4) 92
Figure 2-32 Remove the intermediate transfer belt (3 of 4) 93
Figure 2-33 Remove the intermediate transfer belt (4 of 4) 94
Figure 2-34 External panels, covers, and doors; identification and location 95
Figure 2-35 Remove the upper-left cover (1 of 3) 96
Figure 2-36 Remove the upper-left cover (2 of 3) 96
Figure 2-37 Remove the upper-left cover (3 of 3) 97
Figure 2-38 Remove the power-supply cover 98
Figure 2-39 Remove the left cover (1 of 2) 99
Figure 2-40 Remove the left cover (2 of 2) 99
Figure 2-41 Remove the front-top cover (1 of 3) 100
Figure 2-42 Remove the front-top cover (2 of 3) 100
Figure 2-43 Remove the front-top cover (3 of 3) 101
Figure 2-44 Remove the rear-top cover (1 of 2) 102
Figure 2-45 Remove the rear-top cover (2 of 2) 102
Figure 2-46 Remove the right-front cover (1 of 3) 103
Figure 2-47 Remove the right-front cover (2 of 3) 103
Figure 2-48 Remove the right-front cover (3 of 3) 104
Figure 2-49 Reinstall the power button 104
Figure 2-50 Remove the control-panel assembly (1 of 2) 105
Figure 2-51 Remove the control-panel assembly (2 of 2) 106
Figure 2-52 Remove the front-door assembly (1 of 5) 107
Figure 2-53 Remove the front-door assembly (2 of 5) 108
Figure 2-54 Remove the front-door assembly (3 of 5) 108
Figure 2-55 Remove the front-door assembly (4 of 5) 109
Figure 2-56 Remove the front-door assembly (5 of 5) 109
Figure 2-57 Remove the right-rear cover (1 of 2) 110
Figure 2-58 Remove the right-rear cover (2 of 2) 111
Figure 2-59 Remove the rear cover 112
Figure 2-60 Remove the right-door assembly (1 of 9) 113
Figure 2-61 Remove the right-door assembly (2 of 9) 113
Figure 2-62 Remove the right-door assembly (3 of 9) 114
Figure 2-63 Remove the right-door assembly (4 of 9) 114
Figure 2-64 Remove the right-door assembly (5 of 9) 115
Figure 2-65 Remove the right-door assembly (6 of 9) 115
Figure 2-66 Remove the right-door assembly (7 of 9) 116
Figure 2-67 Remove the right-door assembly (8 of 9) 116
Figure 2-68 Remove the right-door assembly (9 of 9) 117
Figure 2-69 Remove the cassette feed guide (1 of 2) 118
Figure 2-70 Remove the cassette feed (2 of 2) 118

Figure 2-71 Remove the secondary transfer assembly (1 of 3) 119
Figure 2-72 Remove the secondary transfer assembly (2 of 3) 119
Figure 2-73 Remove the secondary transfer assembly (3 of 3) 120
Figure 2-74 Reinstall the secondary transfer assembly 120
Figure 2-75 Remove the separation pad (1 of 6) 121
Figure 2-76 Remove the separation pad (2 of 6) 121
Figure 2-77 Remove the separation pad (3 of 6) 122
Figure 2-78 Remove the separation pad (4 of 6) 122
Figure 2-79 Remove the separation pad (5 of 6) 123
Figure 2-80 Remove the separation pad (6 of 6) 123
Figure 2-81 Remove the RD sensor assembly (1 of 7) 124
Figure 2-82 Remove the RD sensor assembly (2 of 7) 124
Figure 2-83 Remove the RD sensor assembly (3 of 7) 125
Figure 2-84 Remove the RD sensor assembly (4 of 7) 125
Figure 2-85 Remove the RD sensor assembly (5 of 7) 126
Figure 2-86 Remove the RD sensor assembly (6 of 7) 126
Figure 2-87 Remove the RD sensor assembly (7 of 7) 127
Figure 2-88 Remove the registration assembly (1 of 8) 129
Figure 2-89 Remove the registration assembly (2 of 8) 129
Figure 2-90 Remove the registration assembly (3 of 8) 130
Figure 2-91 Remove the registration assembly (4 of 8) 130
Figure 2-92 Remove the registration assembly (5 of 8) 131
Figure 2-93 Remove the registration assembly (6 of 8) 131
Figure 2-94 Remove the registration assembly (7 of 8) 132
Figure 2-95 Remove the registration assembly (8 of 8) 132
Figure 2-96 Remove the residual-toner-feed motor 133
Figure 2-97 Remove the residual-toner duct and feed assembly (1 of 4) 134
Figure 2-98 Remove the residual-toner duct and feed assembly (2 of 4) 135
Figure 2-99 Remove the residual-toner duct and feed assembly (3 of 4) 135
Figure 2-100 Remove residual-toner duct and feed assembly (4 of 4) 136
Figure 2-101 Remove the cartridge fan and environmental sensor (1 of 7) 137
Figure 2-102 Remove the cartridge fan and environmental sensor (2 of 7) 138
Figure 2-103 Remove the cartridge fan and environmental sensor (3 of 7) 138
Figure 2-104 Remove the cartridge fan and environmental sensor (4 of 7) 139
Figure 2-105 Remove the cartridge fan and environmental sensor (5 of 7) 139
Figure 2-106 Remove the cartridge fan and environmental sensor (6 of 7) 140
Figure 2-107 Remove the cartridge fan and environmental sensor (7 of 7) 140
Figure 2-108 Remove the toner-collection sensor and scanner-thermistor assembly (1 of 3) 141
Figure 2-109 Remove the toner-collection sensor and scanner-thermistor assembly (2 of 3) 142
Figure 2-110 Remove the toner-collection sensor and scanner-thermistor assembly (3 of 3) 142
Figure 2-111 Remove the delivery fan (1 of 2) 143
Figure 2-112 Remove the delivery fan (2 of 2) 144
Figure 2-113 Remove the delivery assembly (1 of 7) 145
Figure 2-114 Remove the delivery assembly (2 of 7) 146

Figure 2-115 Remove the delivery assembly (3 of 7) 146
Figure 2-116 Remove the delivery assembly (4 of 7) 147
Figure 2-117 Remove the delivery assembly (5 of 7) 147
Figure 2-118 Remove the delivery assembly (6 of 7) 148
Figure 2-119 Remove the delivery assembly (7 of 7) 148
Figure 2-120 Reinstall the delivery assembly (1 of 4) 149
Figure 2-121 Reinstall the delivery assembly (2 of 4) 149
Figure 2-122 Reinstall the delivery assembly (3 of 4) 150
Figure 2-123 Reinstall the delivery assembly (4 of 4) 150
Figure 2-124 Remove the duplex-drive assembly 151
Figure 2-125 Remove the power-supply fan 152
Figure 2-126 Remove the ICB (1 of 2) 153
Figure 2-127 Remove the ICB (2 of 2) 154
Figure 2-128 Remove the DC controller PCA only (1 of 2) 155
Figure 2-129 Remove the DC controller PCA only (2 of 2) 156
Figure 2-130 Remove the low-voltage power supply (1 of 6) 157
Figure 2-131 Remove the low-voltage power supply (1 of 6) 158
Figure 2-132 Remove the low-voltage power supply (2 of 6) 158
Figure 2-133 Remove the low-voltage power supply (3 of 6) 159
Figure 2-134 Remove the low-voltage power supply (4 of 6) 159
Figure 2-135 Remove the low-voltage power supply (5 of 6) 160
Figure 2-136 Remove the low-voltage power supply (6 of 6) 160
Figure 2-137 Remove the DC controller PCA and tray (1 of 3) 161
Figure 2-138 Remove the DC controller PCA and tray (2 of 3) 162
Figure 2-139 Remove the DC controller PCA and tray (3 of 3) 162
Figure 2-140 Remove the high-voltage power supply lower (1 of 7) 163
Figure 2-141 Remove the high-voltage power supply lower (2 of 7) 164
Figure 2-142 Remove the high-voltage power supply lower (3 of 7) 165
Figure 2-143 Remove the high-voltage power supply lower (4 of 7) 165
Figure 2-144 Remove the high-voltage power supply lower (5 of 7) 166
Figure 2-145 Remove the high-voltage power supply lower (6 of 7) 166
Figure 2-146 Remove the high-voltage power supply lower (7 of 7) 167
Figure 2-147 Reinstall the high-voltage power supply lower 167
Figure 2-148 Remove the developing-disengagement motor 168
Figure 2-149 Remove the exhaust fan and fan duct (1 of 3) 169
Figure 2-150 Remove the exhaust fan and fan duct (2 of 3) 170
Figure 2-151 Remove the exhaust fan and fan duct (3 of 3) 170
Figure 2-152 Reinstall the exhaust fan and fan duct 171
Figure 2-153 Remove the pickup motor 172
Figure 2-154 Remove the lifter-drive assembly (1 of 2) 173
Figure 2-155 Remove the lifter-drive assembly (2 of 3) 174
Figure 2-156 Remove the lifter-drive assembly (3 of 3) 174
Figure 2-157 Remove the lifter base assembly (1 of 2) 175
Figure 2-158 Remove the lifter base assembly (2 of 2) 176

Figure 2-159 Reinstall the lifter base assembly (1 of 2) 176
Figure 2-160 Reinstall the lifter base assembly (2 of 2) 177
Figure 2-161 Remove the tray-pickup drive assembly (1 of 3) 178
Figure 2-162 Remove the tray-pickup drive assembly (2 of 3) 179
Figure 2-163 Remove the tray-pickup drive assembly (3 of 3) 179
Figure 2-164 Remove the tray-pickup assembly (1 of 11) 180
Figure 2-165 Remove the tray-pickup assembly (2 of 11) 181
Figure 2-166 Remove the tray-pickup assembly (3 of 11) 181
Figure 2-167 Remove the tray-pickup assembly (4 of 11) 182
Figure 2-168 Remove the tray-pickup assembly (5 of 11) 182
Figure 2-169 Remove the tray-pickup assembly (6 of 11) 183
Figure 2-170 Remove the tray-pickup assembly (7 of 11) 183
Figure 2-171 Remove the tray-pickup assembly (8 of 11) 184
Figure 2-172 Remove the tray-pickup assembly (9 of 11) 184
Figure 2-173 Remove the tray-pickup assembly (10 of 11) 185
Figure 2-174 Remove the tray-pickup assembly (11 of 11) 185
Figure 2-175 Remove the laser/scanner assembly (Y/M) (1 of 5) 187
Figure 2-176 Remove the laser/scanner assembly (Y/M) (2 of 5) 187
Figure 2-177 Remove the laser/scanner assembly (Y/M) (3 of 5) 188
Figure 2-178 Remove the laser/scanner assembly (Y/M) (4 of 5). 189
Figure 2-179 Remove the laser/scanner assembly (Y/M) (5 of 5) 189
Figure 2-180 Remove the laser/scanner assembly (C/Bk) (1 of 5) 191
Figure 2-181 Remove the laser/scanner assembly (C/Bk) (2 of 5) 191
Figure 2-182 Remove the laser/scanner assembly (C/Bk) (3 of 5) 192
Figure 2-183 Remove the laser/scanner assembly (C/Bk) (4 of 5) 192
Figure 2-184 Remove the laser/scanner assembly (C/Bk) (5 of 5) 193
Figure 2-185 Reinstall the PGC actuators (1 of 5) 193
Figure 2-186 Reinstall the PGC actuators (2 of 5) 194
Figure 2-187 Reinstall the PGC actuators (3 of 5) 194
Figure 2-188 Reinstall the PGC actuators (4 of 5) 195
Figure 2-189 Reinstall the PGC actuators (5 of 5) 195
Figure 2-190 Remove the high-voltage power supply upper (1 of 2) 196
Figure 2-191 Remove the high-voltage power supply upper (2 of 2) 197
Figure 2-192 Reinstall the high-voltage power supply upper 198
Figure 2-193 Remove the yellow, magenta, cyan, and black drum motors 199
Figure 2-194 Remove the fuser motor 201
Figure 2-195 Remove the ITB motor (1 of 2) 202
Figure 2-196 Remove the main-drive assembly (1 of 6) 204
Figure 2-197 Remove the main-drive assembly (2 of 6) 204
Figure 2-198 Remove the main-drive assembly (3 of 6) 205
Figure 2-199 Remove the main-drive assembly (4 of 6) 205
Figure 2-200 Remove the main-drive assembly (5 of 6) 206
Figure 2-201 Remove the main-drive assembly (6 of 6) 206
Figure 2-202 Reinstall the main-drive assembly (1 of 7) 207

Figure 2-203 Reinstall the main-drive assembly (2 of 7) 207
Figure 2-204 Reinstall the main-drive assembly (3 of 7) 208
Figure 2-205 Reinstall the main-drive assembly (4 of 7) 209
Figure 2-206 Reinstall the main-drive assembly (5 of 7) 209
Figure 2-207 Reinstall the main-drive assembly (6 of 7) 210
Figure 2-208 Reinstall the main-drive assembly (7 of 7) 210
Figure 2-209 Remove the fuser-drive assembly (1 of 7) 212
Figure 2-210 Remove the fuser-drive assembly (2 of 7) 212
Figure 2-211 Remove the fuser-drive assembly (3 of 7) 213
Figure 2-212 Remove the fuser-drive assembly (4 of 7) 213
Figure 2-213 Remove the fuser-drive assembly (5 of 7) 214
Figure 2-214 Remove the fuser-drive assembly (6 of 7) 214
Figure 2-215 Remove the fuser-drive assembly (7 of 7) 215
Figure 2-216 Reinstall the fuser-drive assembly 215
Figure 2-217 Remove the front door (optional paper feeder) (1 of 2) 216
Figure 2-218 Remove the front door (optional paper feeder) (2 of 2) 217
Figure 2-219 Remove the rear cover (optional paper feeder) 218
Figure 2-220 Remove the right-front cover (optional paper feeder) 219
Figure 2-221 Remove the right door (optional paper feeder) (1 of 3) 220
Figure 2-222 Remove the right door (optional paper feeder) (2 of 3) 220
Figure 2-223 Remove the right door (optional paper feeder) (3 of 3) 221
Figure 2-224 Remove the left cover (optional paper feeder) (1 of 3) 222
Figure 2-225 Remove the left cover (optional paper feeder) (2 of 3) 223
Figure 2-226 Remove the left cover (optional paper feeder) (3 of 3) 223
Figure 2-227 Remove the right cover (optional paper feeder) 224
Figure 2-228 Remove the rear-right cover (optional paper feeder) 225
Figure 2-229 Remove the pickup assembly (optional paper feeder) (1 of 5) 226
Figure 2-230 Remove the pickup assembly (optional paper feeder) (2 of 5) 227
Figure 2-231 Remove the pickup assembly (optional paper feeder) (3 of 5) 227
Figure 2-232 Remove the pickup assembly (optional paper feeder) (4 of 5) 228
Figure 2-233 Remove the pickup assembly (optional paper feeder) (5 of 5) 228
Figure 2-234 Remove the lifter assembly (optional paper feeder) (1 of 2) 229
Figure 2-235 Remove the lifter assembly (optional paper feeder) (2 of 2) 229
Figure 2-236 Remove the lifter-drive assembly (optional paper feeder) (1 of 2) 230
Figure 2-237 Remove the lifter-drive assembly (optional paper feeder) (2 of 2) 230
Figure 2-238 Remove the pickup motor assembly (optional paper feeder) (1 of 2) 231
Figure 2-239 Remove the pickup motor assembly (optional paper feeder) (2 of 2) 231
Figure 2-240 Remove the controller PCA (optional paper feeder) (1 of 2) 232
Figure 2-241 Remove the controller PCA (optional paper feeder) (2 of 2) 232
Figure 3-1 Diagnostic test (1 of 2) 243
Figure 3-2 Diagnostic test (2 of 2) 244
Figure 3-3 Engine-test button 245
Figure 3-4 Test the TOP sensor (1 of 2) 247
Figure 3-5 Test the TOP sensor (2 of 2) 247

Figure 3-6 Test the loop sensors 248
Figure 3-7 Test the fuser delivery sensor (1 of 2) 249
Figure 3-8 Test the fuser delivery sensor (2 of 2) 249
Figure 3-9 Test the duplex re-pickup sensor 250
Figure 3-10 Test the output-bin-full sensor 251
Figure 3-11 Test the fuser pressure-release sensor 253
Figure 3-12 Test the primary transfer-roller-disengagement sensor (1 of 4) 254
Figure 3-13 Test the primary transfer-roller-disengagement sensor (2 of 4) 254
Figure 3-14 Test the primary transfer-roller-disengagement sensor (3 of 4) 255
Figure 3-15 Test the primary transfer-roller-disengagement sensor (4 of 4) 255
Figure 3-16 Media sensor 256
Figure 3-17 Test the front-door switch 257
Figure 3-18 Test the right door switch 258
Figure 3-19 Test the Tray 1 media-present sensor 261
Figure 3-20 Test the tray 2 paper-present sensor 262
Figure 3-21 Tray 2 paper surface 1 and 2 263
Figure 3-22 Test the Tray 2 paper size switches 264
Figure 3-23 Test the Tray 3 feed sensor 265
Figure 3-24 Test the new ITB sensor 271
Figure 3-25 Test the new ITB sensor 271
Figure 3-26 Test the right door switch 272
Figure 3-27 Product cross section 277
Figure 3-28 Optional paper feeder (1 x 500-sheet) 278
Figure 3-29 Optional paper feeder (3 x 500-sheet) 279
Figure 3-30 Formatter PCA 280
Figure 3-31 DC controller connector locations 281
Figure 3-32 Controller PCA connectors 283
Figure 3-33 External component locations 284
Figure 3-34 Major component locations (1 of 3) 285
Figure 3-35 Major component locations (2 of 3) 286
Figure 3-36 Major component locations (3 of 3) 287
Figure 3-37 Motors, fans, and rollers component locations 288
Figure 3-38 PCA component locations 289
Figure 3-39 Optional paper feeder (1 x 500-sheet) component locations (1 of 2) 290
Figure 3-40 Optional paper feeder (1 x 500-sheet) component locations (2 of 2) 291
Figure 3-41 Optional paper feeder (3 x 500-sheet) component locations (1 of 2) 292
Figure 3-42 Optional paper feeder (3 x 500-sheet) component locations (2 of 2) 293
Figure 3-43 General timing chart 294
Figure 3-44 General circuit diagram (1 of 2) 295
Figure 3-45 General circuit diagram (1 of 2) 295
Figure 3-46 Paper feeder circuit diagram (1 X 500-sheet) 296
Figure 3-47 Paper feeder circuit diagram (3 X 500-sheet) 297
Figure 3-48 Print-quality troubleshooting procedure 302
Figure 3-49 Yellow print-quality troubleshooting page 303

Figure 3-50 Yellow comparison page 303
Figure 3-51 Black print-quality troubleshooting page 304
Figure 3-52 Configuration page 307
Figure 3-53 HP embedded Jetdirect page 309
Figure 3-54 Embedded protocol page 310
Figure 3-55 Repetitive defects ruler 312
Figure 3-56 Sample event log 377
Figure 3-57 Common causes of jams (by area) 384
Figure 3-58 Jam locations 386
Figure 4-1 External covers, panels, and doors 432
Figure 4-2 Right door assembly 434
Figure 4-3 Front door assembly 436
Figure 4-4 Internal components 1 of 7 438
Figure 4-5 Internal components 2 of 7 440
Figure 4-6 Internal components 3 of 7 442
Figure 4-7 Internal components 4 of 7 444
Figure 4-8 Internal components 5 of 7 446
Figure 4-9 Internal components 6 of 7 448
Figure 4-10 Internal components 7 of 7 450
Figure 4-11 Cassettes 2-5 452
Figure 4-12 Paper pickup assembly 454
Figure 4-13 Tray 1 paper pickup assembly 456
Figure 4-14 Registration assembly 458
Figure 4-15 Secondary transfer assembly 460
Figure 4-16 Delivery assembly 462
Figure 4-17 Fuser assembly 464
Figure 4-18 PCAs 466
Figure 4-19 Paper feeders 468
Figure 4-20 Paper feeder external covers, panels, and doors 470
Figure 4-21 1 X 500 paper feeder main body 472
Figure 4-22 3 X 500 paper feeder main body 474

1 Theory of operation

- Basic operation
- Engine-control system
- Laser/scanner system
- Image-formation system
- Pickup, feed, and delivery system
- Jam detection
- Optional paper feeder

Basic operation

The product routes all high-level processes through the formatter, which stores font information, processes the print image, and communicates with the host computer.

The basic product operation comprises the following systems:

- The engine-control system, which includes the power supply and the DC controller printed circuit assembly (PCA)
- The laser/scanner system, which forms the latent image on the photosensitive drum
- The image-formation system, which transfers a toner image onto the paper
- The media feed system, which uses a system of rollers and belts to transport the paper through the product
- Option (optional paper feeder)

Figure 1-1 Relationship between the main product systems

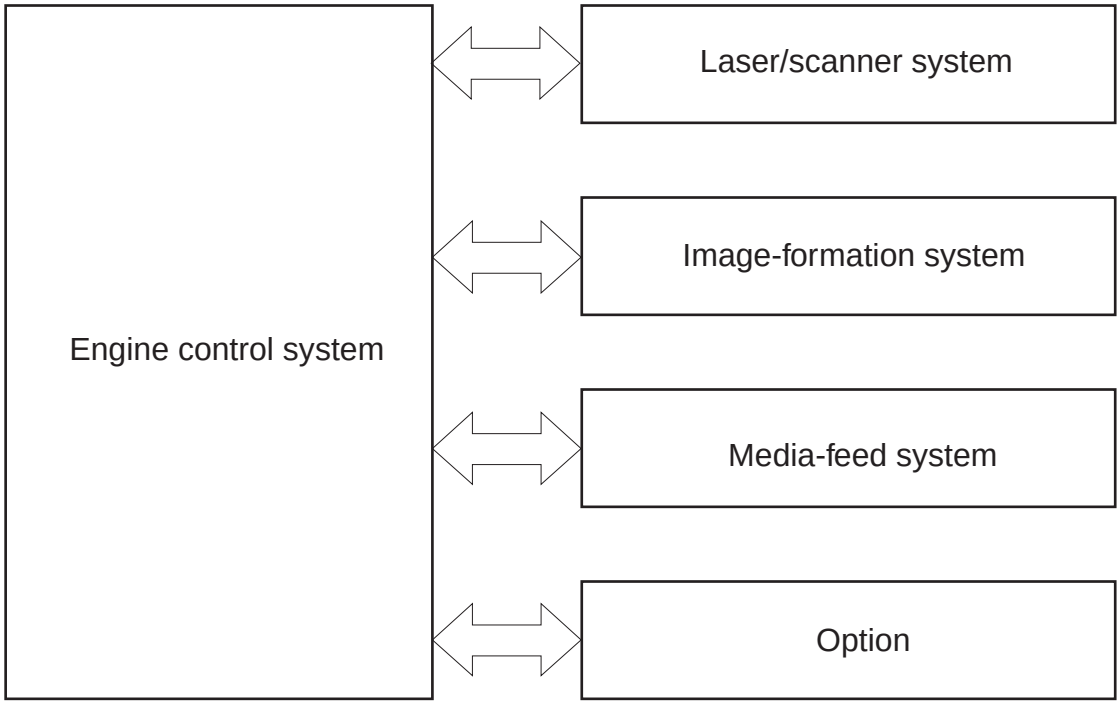

Sequence of operation

The DC controller PCA controls the operating sequence, as described in the following table.

Table 1-1 Sequence of operation

Period	Duration	Description
Waiting	From the time the power is turned on, the door is closed, or when the product exits Sleep mode until the product is ready for printing	• Heats the fuser sleeve in the fuser • Pressurizes the pressure roller in the fuser • Detects the print cartridges • Moves the ITB and developing unit to the home position • Cleans the ITB and secondary transfer roller
Standby	From the end of the waiting sequence or the last rotation until the formatter receives a print command or until the product is turned off	• The product is in the **READY** state. • The product enters Sleep mode if the sleep command is received from the formatter. • The product calibrates if it is time for an automatic calibration.
Initial rotation	From the time the formatter receives a print command until the paper enters the paper path	• Activates the high-voltage power supply • Prepares each laser/scanner unit • Warms the fuser to the correct temperature
Printing	From the time the first sheet of paper enters the paper path until the last sheet has passed through the fuser	• Forms the image on the photosensitive drums • Transfers the toner to the paper • Fuses the toner image onto the paper
Last rotation	From the time the last sheet of paper exits the fuser until the motors stop rotating	• Moves the last printed sheet into the output bin • Stops the high-voltage power supply • Stops each laser/scanner unit • If another print command is received, the product enters the initial rotation period when the last rotation is complete.

Engine-control system

The engine-control system receives commands from the formatter and interacts with the other main systems to coordinate all product functions. The engine-control system consists of the following components:

- DC controller
- Low-voltage power supply
- High-voltage power supply
- Fuser control

Figure 1-2 Engine-control system

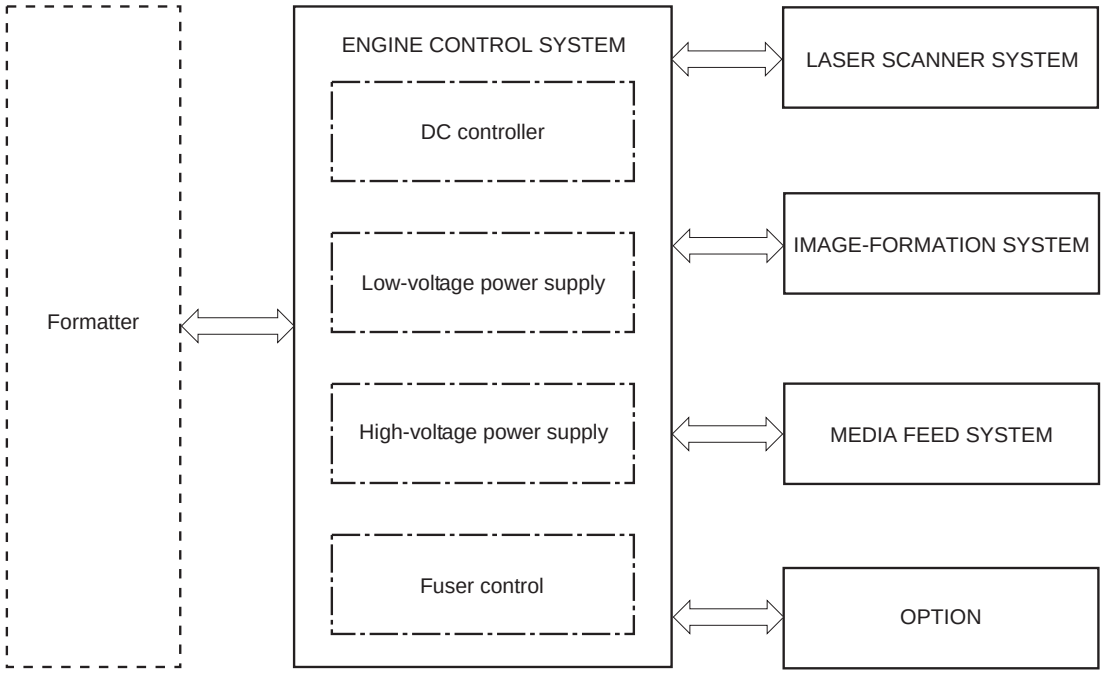

DC controller

The DC controller controls the operational sequence of the product.

Figure 1-3 DC controller block diagram

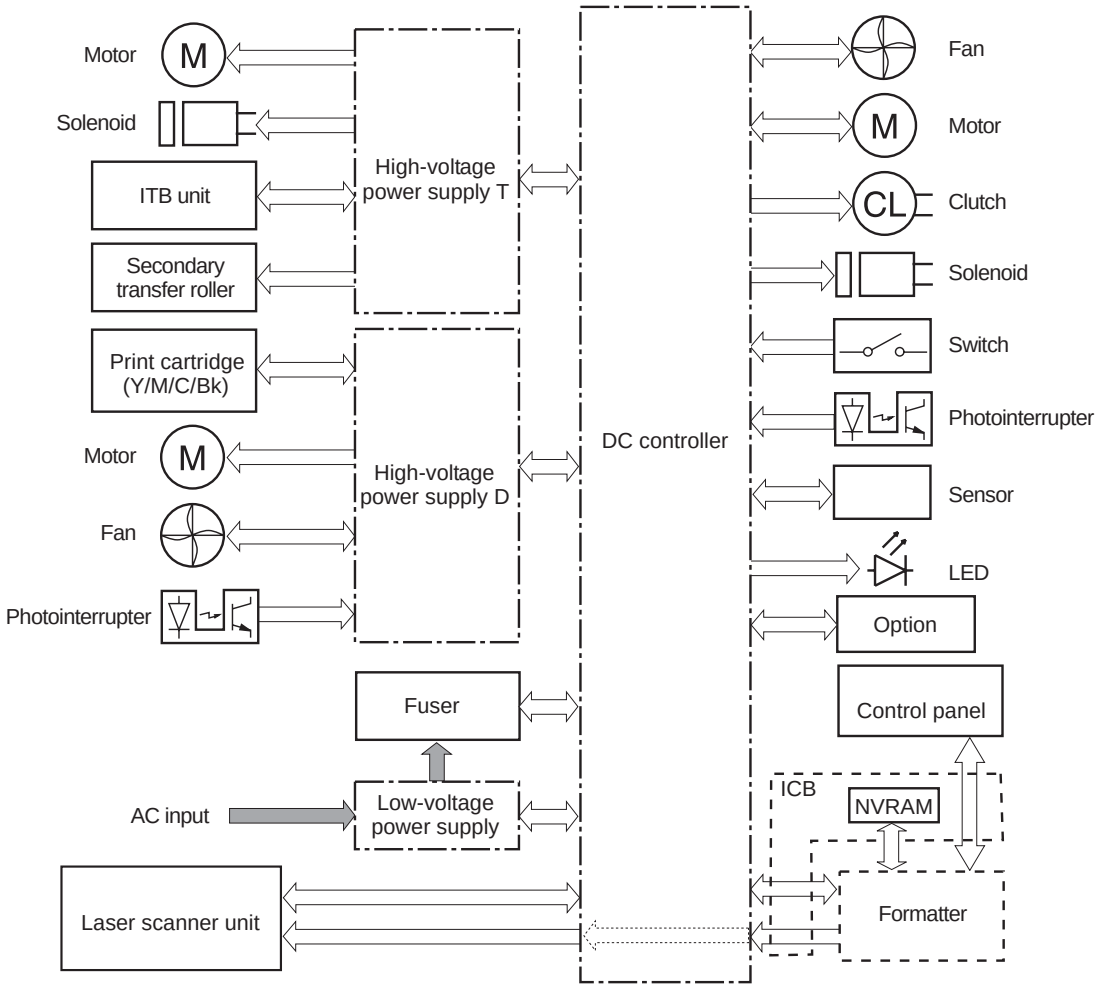

Solenoids

Table 1-2 Solenoids

Component abbreviation	Component name
SL1	Primary transfer roller disengagement solenoid
SL2	Duplex reverse solenoid (HP Color LaserJet CP4525dn, HP Color LaserJet CP4025dn, and HP Color LaserJet CP4525xh only)
SL3	Multipurpose-tray pickup solenoid
SL4	Cassette pickup solenoid

Clutches

Component abbreviation	Component name
CL1	Duplex re-pickup clutch (HP Color LaserJet CP4525dn, HP Color LaserJet CP4025dn, and HP Color LaserJet CP4525xh only)

Switches

Table 1-3 Switches

Component abbreviation	Component name
SW1	5V interlock switch
SW2	24V interlock switch
SW3	Power switch
SW4	Cassette media size switch
SW5	Front door switch
SW6	Right door switch
	Test print switch

Sensors

Table 1-4 Sensors

Component abbreviation	Component name
NPLED	Media sensor
SR1	Yellow drum home position sensor
SR2	Magenta drum home position sensor
SR3	Cyan drum home position sensor
SR4	Black drum home position sensor
SR5	Fuser delivery sensor
SR6	Output bin full sensor
SR7	Fuser pressure release sensor
SR8	MP-tray-media-presence sensor
SR9	Primary-transfer-roller disengagement sensor
SR10	New ITB sensor
SR11	Developer alienation sensor
SR14	Loop sensor 1
SR15	Loop sensor 2
SR20	TOP (top of page) sensor
SR22	Duplex re-pickup sensor (HP Color LaserJet CP4525dn, HP Color LaserJet CP4025dn, and HP Color LaserJet CP4525xh only)
SR23	Tray 2 paper surface 1 sensor
SR24	Tray 2 paper surface 2 sensor
SR25	Tray 2 paper present sensor
	RD sensor
	Environment sensor (temperature and humidity)
	Yellow toner-level sensor
	Magenta toner-level sensor
	Cyan toner-level sensor
	Black toner-level sensor
	Residual toner full sensor
TH4	Laser scanner temperature sensor

Motors

The product has 13 motors. The motors drive the components in the paper-feed and image-formation systems.

Table 1-5 Motors

Abbreviation	Name	Purpose	Failure detection
M1	ITB motor	Drives the ITB and residual toner feed screw	Yes
M2	Fuser motor	Drives the fuser sleeve, pressure roller, fuser pressure roller, and primary transfer roller disengagement	Yes
M3	Y drum motor	Drives the photosensitive drum (yellow), developing roller (yellow), and primary charging roller (yellow)	Yes
M4	M drum motor	Drives the photosensitive drum (magenta), developing roller (magenta), and primary charging roller (magenta)	Yes
M5	C drum motor	Drives the photosensitive drum (cyan), developing roller (cyan), and primary charging roller (cyan)	Yes
M6	Bk drum motor	Drives the photosensitive drum (black), developing roller (black), and primary charging roller (black)	Yes
M7	Lifter motor	Drives the lifter for the cassette	Yes
M8	Cyan/black scanner motor	Drives the scanner mirror in the cyan/black laser scanner	Yes
M9	Yellow/magenta scanner motor	Drives the scanner mirror in the yellow/magenta laser scanner	Yes
M10	Developing disengagement motor	Drives the developing unit disengagement	No
M11	Duplex reverse motor (HP Color LaserJet CP4525dn, HP Color LaserJet CP4025dn , and HP Color LaserJet CP4525xh only)	Drives the duplex reverse roller and duplex feed roller	No
M12	Residual toner-feed motor	Drives the residual toner feed screw	Yes
M13	Pickup motor	Drives the cassette pickup roller, MP tray pickup roller, feed roller, and cassette separation roller	No

The DC controller determines if a motor has failed and notifies the formatter when it encounters the following conditions:

- Startup failure: the motor does not reach a specified speed within a specified time from when the motor starts.
- Rotational failure: the rotational speed of the motor is not in the specified range for a specified time after the motor reaches a specified speed.
- Lock detection (for the residual toner feed motor): the value of the motor drive signal voltage is not in the specified range for a specified time.

Fans

The product has four fans for preventing the temperature from rising in the product.

Table 1-6 Fans

Abbreviation	Name	Cooling area	Type	Speed
FM1	Power supply fan	Around the power supply unit	Intake	Full/half
FM2	Cartridge fan	Around the cartridges	Intake	Full/half
FM3	Delivery fan	Around the delivery unit	Intake	Full/half
FM4	Exhaust fan 1	Around the cartridge	Exhaust	Full/half

The DC controller determines if there is a fan failure and notifies the formatter if the fan locks for a specified time from when the fan starts.

High-voltage power supply

The DC controller controls the high-voltage power supply to generate biases. The high-voltage power supply delivers the high-voltage biases to the following components used to transfer toner during the image-formation process:

- Primary-charging roller (in the cartridge)
- Developing roller (in the cartridge)
- Primary-transfer roller
- Secondary-transfer roller

Figure 1-4 High-voltage power supply circuits

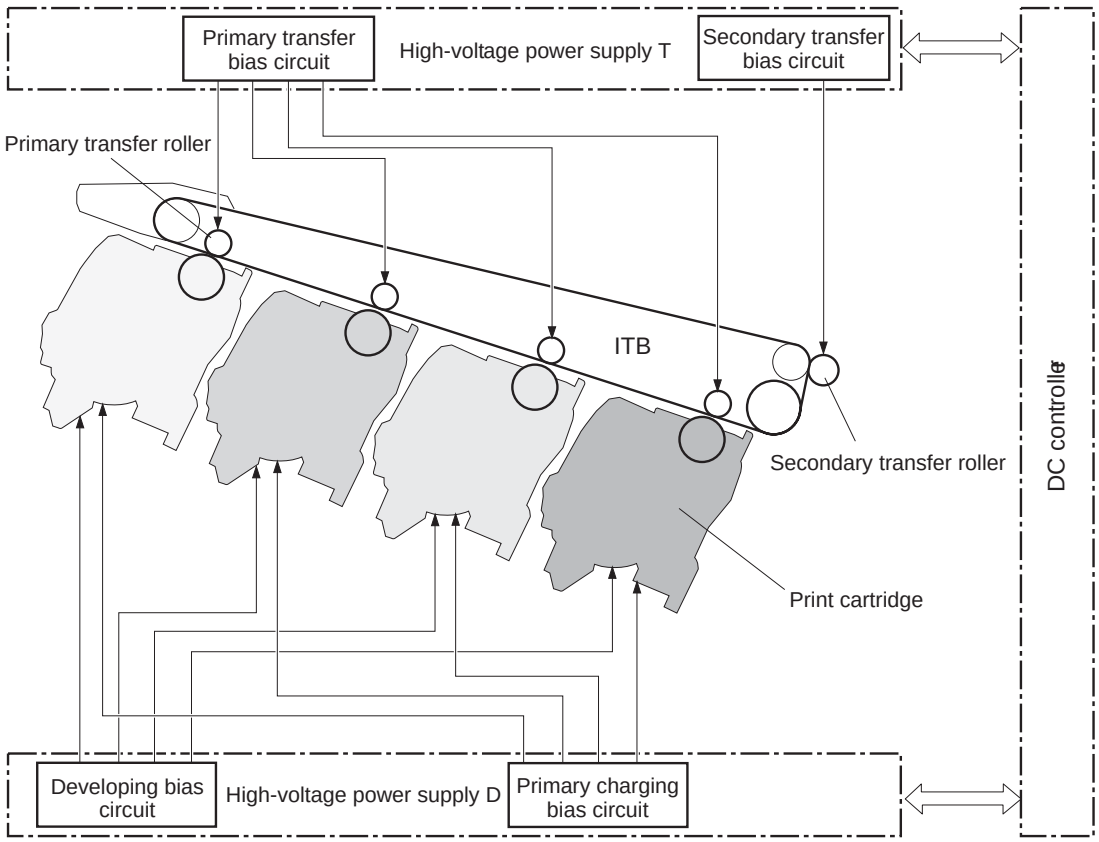

The high-voltage power supply contains several separate circuits.

Table 1-7 High-voltage power supply circuits

Circuit	Description
Primary-charging-bias generation	The primary charging bias negatively charges the surface of the photosensitive drum to prepare for image formation. The primary-charging-bias circuit in the high-voltage power supply generates the biases for each color.
Developing-bias generation	The developing bias adheres toner to an electrostatic latent image formed on the photosensitive drum. The developing-bias circuit in the high-voltage power supply generates the biases for each color.

Table 1-7 High-voltage power supply circuits (continued)

Circuit	Description
Primary-transfer-bias generation	The primary transfer bias transfers the toner from each photosensitive drum onto the ITB. The primary transfer bias circuit in the high-voltage power supply generates the biases for each color.
Secondary-transfer-bias generation	The secondary transfer bias transfers the toner image from the ITB onto the paper. The secondary transfer bias circuit in the high-voltage power supply generates the bias. The reversed bias transfers residual toner on the secondary transfer roller back to the ITB. The residual toner on the ITB is deposited in the toner collection box.

Low-voltage power supply

The low-voltage power-supply circuit converts the AC power from the wall receptacle into the DC voltage that the product components use. The product has two low-voltage power-supplies for 110 Volt or 220 Volt input.

Figure 1-5 Low-voltage power-supply circuit

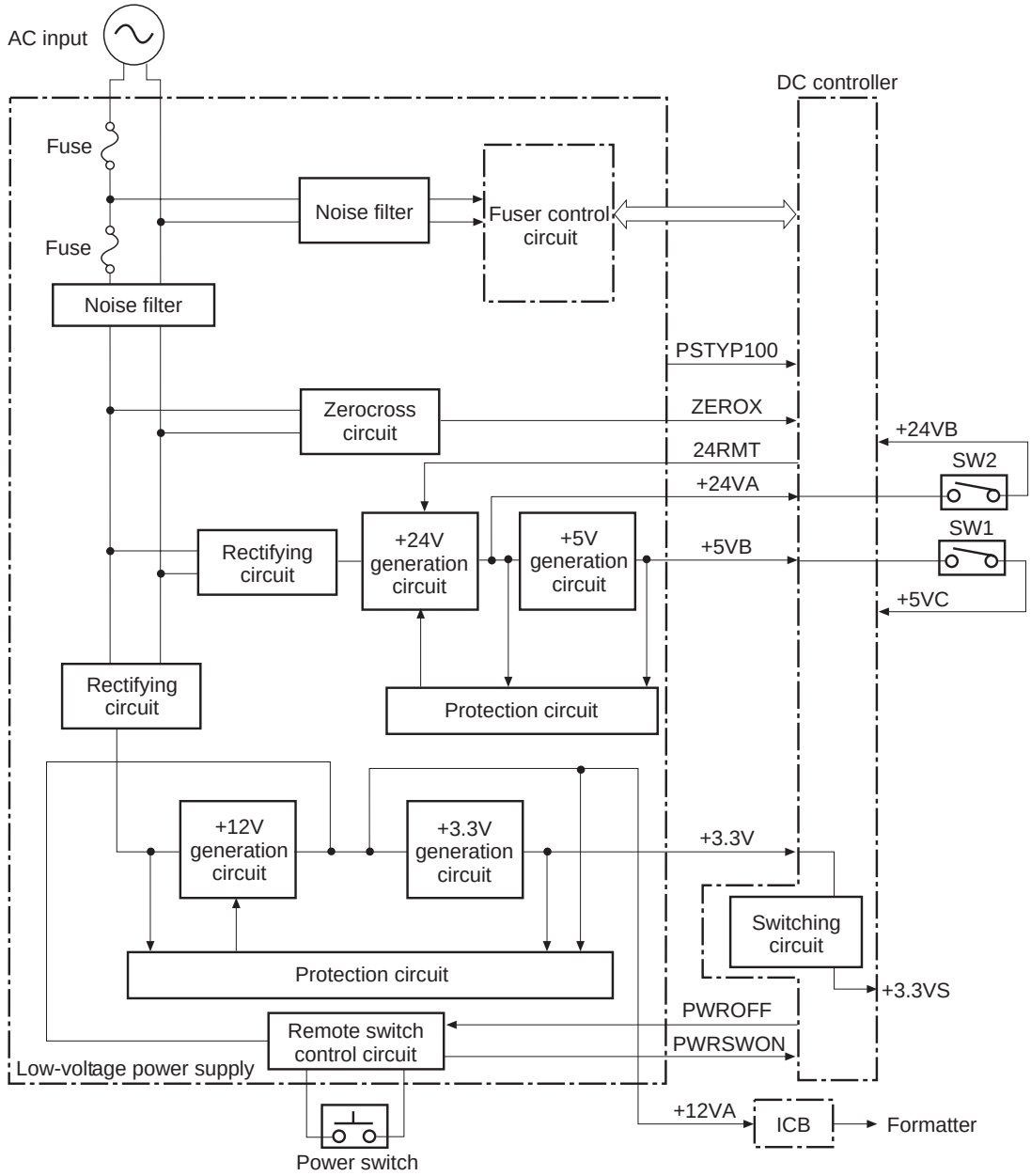

The low-voltage power supply converts the AC power into three DC voltages, which it then subdivides, as described in the following table.

Table 1-8 Converted DC voltages

Main DC voltage	Sub-voltage	Behavior
+24 V	+24 VA	Constantly supplied

Table 1-8 **Converted DC voltages (continued)**

Main DC voltage	Sub-voltage	Behavior
	+24 VB	Interrupted when the front door or right door open
+5 V	+5 VB	Constantly supplied
	+5 VC	Interrupted when the front door or right door open
+3.3 V	3.3 V	Constantly supplied
	3.3 VS	Stopped during Sleep (powersave) mode

Overcurrent/overvoltage protection

The low-voltage power supply stops supplying the DC voltage to the product components whenever it detects excessive current or abnormal voltage from the power source. If DC voltage is not being supplied from the low-voltage power supply, the protective function might be running. In this case, turn the power off and unplug the power cord. Do not turn the power switch on until the root cause is found. The DC controller notifies the formatter of a low-voltage power supply failure when the protective function is activated. In addition, the low-voltage power supply circuit and the fuser control unit have a fuse to protect against overcurrent. If overcurrent flows into the AC line, the fuse blows to stop AC power.

Safety

For personal safety, the product interrupts 24 VB power to the fuser, high-voltage power supply, and motors, in addition to +5 VC to the laser scanners when the front or right door is opened. The power switch is on the dc line so that the ac power flows even if the power switch is turned off. Unplug the power cord before disassembling the product.

Voltage detection

The product detects the power supply voltage that is connected to the product. The DC controller monitors the POWER SUPPLY VOLTAGE (PSTYP100) signal and detects power supply voltage, whether 100 V or 200 V, to control the fuser operation.

Sleep (powersave) mode

Sleep mode conserves energy by stopping the power to several components when the product is idle. If the DC controller detects voltage that is too high when the product is in Sleep mode, it determines that the low-voltage power supply has failed, and it notifies the formatter.

Low-voltage power supply failure

The DC controller determines a low-voltage power supply failure and notifies the formatter when the low-voltage power supply does not supply +24 V.

Fuser control

The fuser heater-control circuit and the fuser heater safety circuit control the fuser temperature according to commands from the DC controller.

Figure 1-6 Fuser components

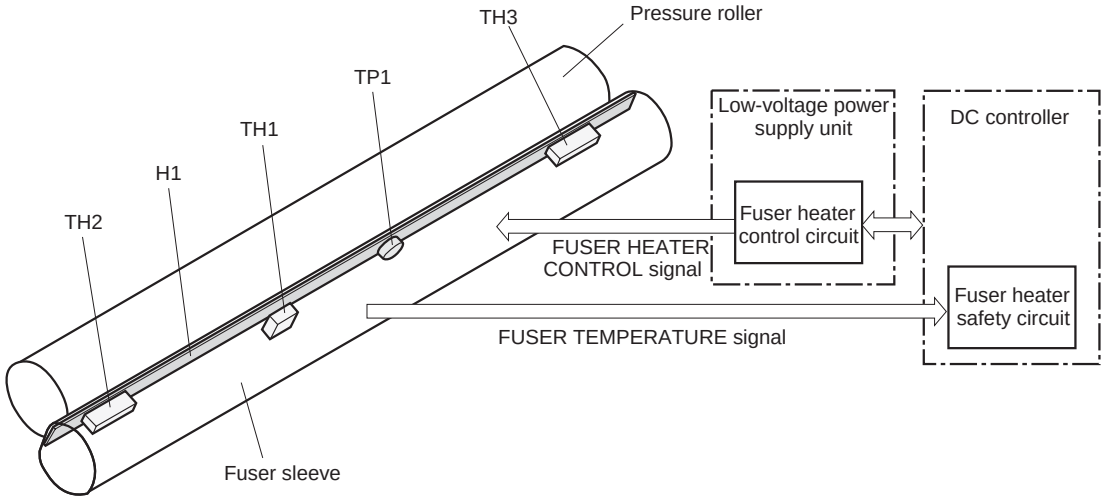

Table 1-9 Fuser components

Type of component	Abbreviation	Name	Function
Heaters	H1	Fuser heater	Heats the fuser sleeve.
Thermistors (Contact type)	TH1	Main thermistor	Detects the center temperature of the fuser sleeve.
	TH2	Sub thermistor 1	Detects the temperature at one end of the fuser heater.
	TH3	Sub thermistor 2	
Thermoswitches (Contact type)	TP1	For the fuser heater	Controls the fuser-roller main heater

Fuser temperature control

The fuser temperature control maintains the target surface temperature of the fuser sleeve.

Figure 1-7 Fuser temperature-control circuit

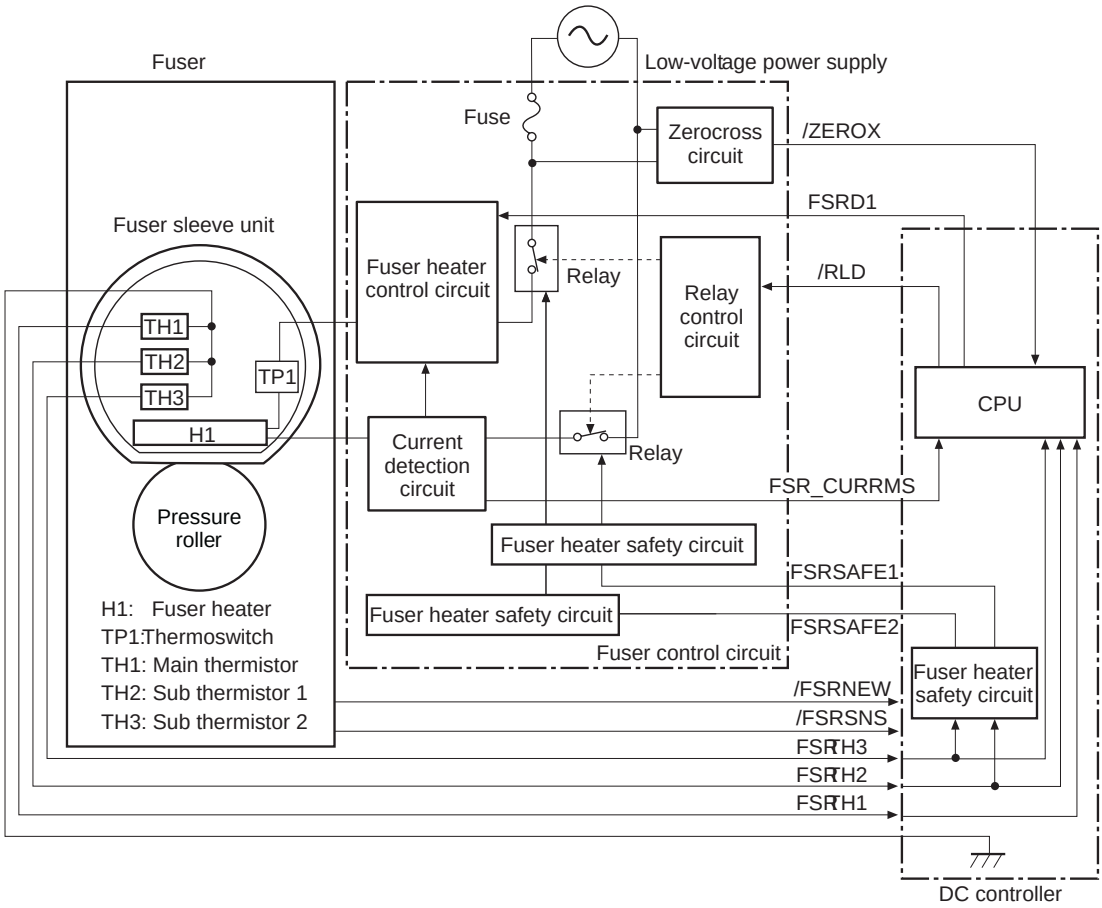

Fuser sleeve temperature protection

The fuser heater controls the temperature of the fuser sleeve. The DC controller detects the center area temperature by monitoring the main thermistor. The DC controller controls the FIXING HEATER CONTROL (FSRD1) signal, so that the fuser sleeve remains at the targeted temperature.

- **Protective function**: The protective function detects rising temperatures in the fuser and interrupts power to the fuser heater. The following four protective components prevent the fuser sleeve and pressure roller from excessive rising temperature:
  - DC controller
  - Fuser heater safety circuit

- Current detection circuit
- Thermoswitch

- **DC controller**: The DC controller monitors the detected temperature of the main thermistor and sub thermistors. The DC controller deactivates the FIXING HEATER CONTROL signal and releases the relay to interrupt power supply to the fuser heater under the following conditions:
  - TH1: 230° C (446° F) or higher
  - TH2: 285° C (545° F) or higher
  - TH3: 285° C (545° F) or higher
- **Fuser-heater safety circuit**: The fuser heater safety circuit monitors the detected temperature of the sub thermistors. The fuser heater safety circuit releases the relay to interrupt power supply to the fuser heater under the following conditions:
  - TH2: 290° C (554° F) or higher
  - TH3: 290° C (554° F) or higher
- **Current-detection protection circuit**: The current detection circuit monitors the current flowing through the fuser heater control circuit. The current detection circuit deactivates the fuser heater control circuit to interrupt power supply to the fuser heater when it detects the current higher than a specified value.
- **Thermoswitch**: If the temperature in the heaters is abnormally high, and the temperature in the thermoswitches exceeds a specified value, the contact to the thermoswitch breaks. Following are the thresholds for each thermoswitch:
  - TP1: 270° C (518° F) or higher

NOTE: When the thermoswitches reach this temperature, the temperature on the fuser rollers is about 320° C (608° F).

Failure detection

The DC controller determines a fuser unit failure, deactivates the FIXING HEATER CONTROL signal, releases the relay to interrupt power supply to the fuser heater, and notifies the formatter of a failure status when it encounters any of following conditions:

- **Abnormally high temperatures**: Temperatures are too high for any of the following components, at any time:
  - TH1: 230° C (446° F) or higher
  - TH2: 285° C (545° F) or higher
  - TH3: 285° C (545° F) or higher
- **Abnormally low temperatures**: Temperatures are too low at any of the following components after the product has initialized.
  - TH1: 120° C (248° F) or lower
  - TP2 or TP3: 100° C (212° F) or lower
- **Abnormal temperature rise**: The DC controller determines an abnormal temperature rise if the detected temperature of TH1 does not rise 2° C within a specified time after the fuser motor is

turned on, or if the detected temperature of the thermistors does not rise to a specified temperature for a specified time after the fuser motor is turned on.

- **Thermistor open**: The DC controller determines a thermistor open if:
  - The detected temperature of TH1 is kept at 12° C (53° F) or lower for a specified time after the fuser motor is turned on.
  - The detected temperature of TH2 is kept at 4° C (39° F) or lower for a specified time.
  - The detected temperature of TH3 is kept at 4° C (39° F) or lower for a specified time.
- **Drive-circuit failure**: The DC controller determines a drive-circuit failure:
  - If the detected power supply frequency is out of a specified range when the product is turned on or during the standby period
  - If the current detection circuit detects an out of specified current value
- **Fuser discrepancy**: The DC controller determines a fuser type mismatch when it detects an unexpected power supply voltage.

Fuser unit identification

The product detects the type and presence of the fuser. The DC controller detects whether the fuser is installed and its type by monitoring the FIXING UNIT IDENTIFICATION (FSRSNS) signal when the product is turned on or when the right door is closed. The DC controller determines a low-voltage power supply failure and notifies the formatter when it fails to detect the type or presence of the fuser.

NOTE: This product detects if the correct fuser for the product is installed. The fuser from a different product (for example, the HP Color LaserJet CP 3525 Series printer) can be installed in this product, but it will not correctly function.

Fuser unit life detection

The product detects the remaining life of a fuser. The DC controller recognizes a new fuser from the NEW FIXING UNIT (/FSRNEW) signal. The DC controller determines a fuser's end of life and then notifies the formatter when a specified number of pages has been printed after the fuser was replaced.

NOTE: The product detects a new fuser using a fusible link that blows after 100 pages of printing. If a new fuser is installed for troubleshooting purposes, be sure to remove it before printing 100 pages.

Laser/scanner system

The laser/scanner system forms the latent electrostatic image on the photosensitive drums according to the VIDEO signals sent from the formatter. The product has two laser/scanners: one for yellow and magenta and the other for cyan and black.

The main components of the laser/scanner system are the laser unit and the scanner motor unit, which are controlled by the signals sent from the DC controller.

Figure 1-8 Laser/scanner system

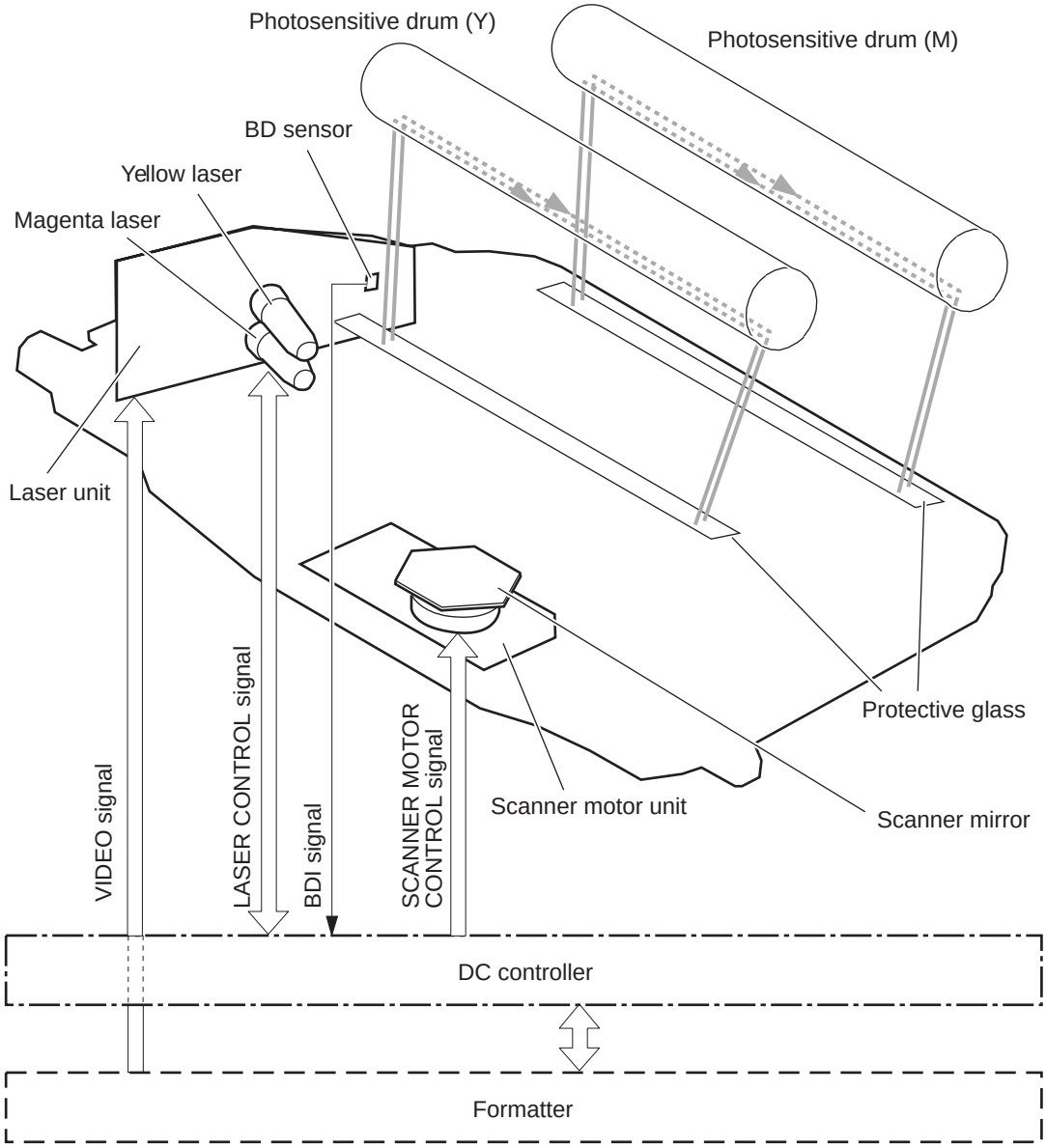

Laser/scanner failure

The DC controller determines that a laser/scanner has failed when any of the following conditions occurs:

- **Laser failure**: The detected laser intensity does not match a specified value when the product initializes.
- **Scanner motor startup failure**: The scanner motor does not reach a specified rotation within a specified period from when the laser scanner starts driving.
- **Scanner-motor abnormal rotation**: When a specified BD interval is not detected during a print operation, a BD error is determined. If the BD interval does not recover within a specified period after the BD error occurs, the product determines a scanner motor abnormal rotation.

The laser/scanner system does not have a mechanical laser shutter. For safety reason, the product has a interlock switch. The interlock switch is turned off to interrupt +5 V power supply to the laser/scanner system, when the front or right door is open.

Protective-glass cleaners

Each laser/scanner has two openings which allow the laser beam to pass to the surface of the photosensitive drum. These openings are covered by protective glass. When the protective glass gets dirty (for example, by paper dust or toner) a protective-glass cleaner (PGC) cleans them.

NOTE: When a glass is dirty, streaks appear on the printed page in the process direction.

The PGC is a cleaning pad which slides along the laser shutter. With the front door open, the laser shutter is positioned over the glass. As a print cartridge is inserted, the cleaning pad is pushed down and wipes the glass. When the front door is closed after cartridge insertion, the laser shutter (and PGC) move away from the glass which allows the laser beam to pass through the glass.

When the front door is opened, the laser shutter and PGC move back into position over the glass. When the cartridge is pulled out, the cleaning pad is returned to its starting position at the front of the cartridge opening.

Figure 1-9 Protective-glass cleaners (PGCs)

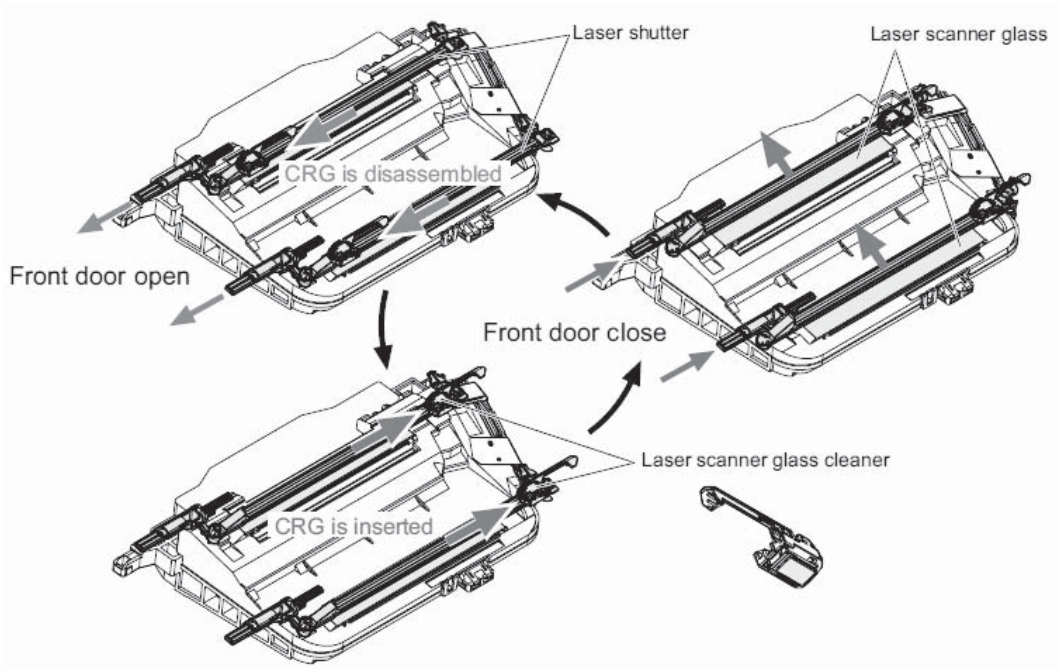

Image-formation system

The image-formation system creates the printed image on the paper. The system consists of the following components:

- Print cartridges
- ITB
- Secondary transfer roller
- Fuser
- Laser /scanner units

The DC controller controls the laser scanner unit and each of the high-voltage power supplies to form the toner image on the photosensitive drum surface, according to the VIDEO signals. The toner image is then transferred to the print-media and fused.

Figure 1-10 Image-formation system

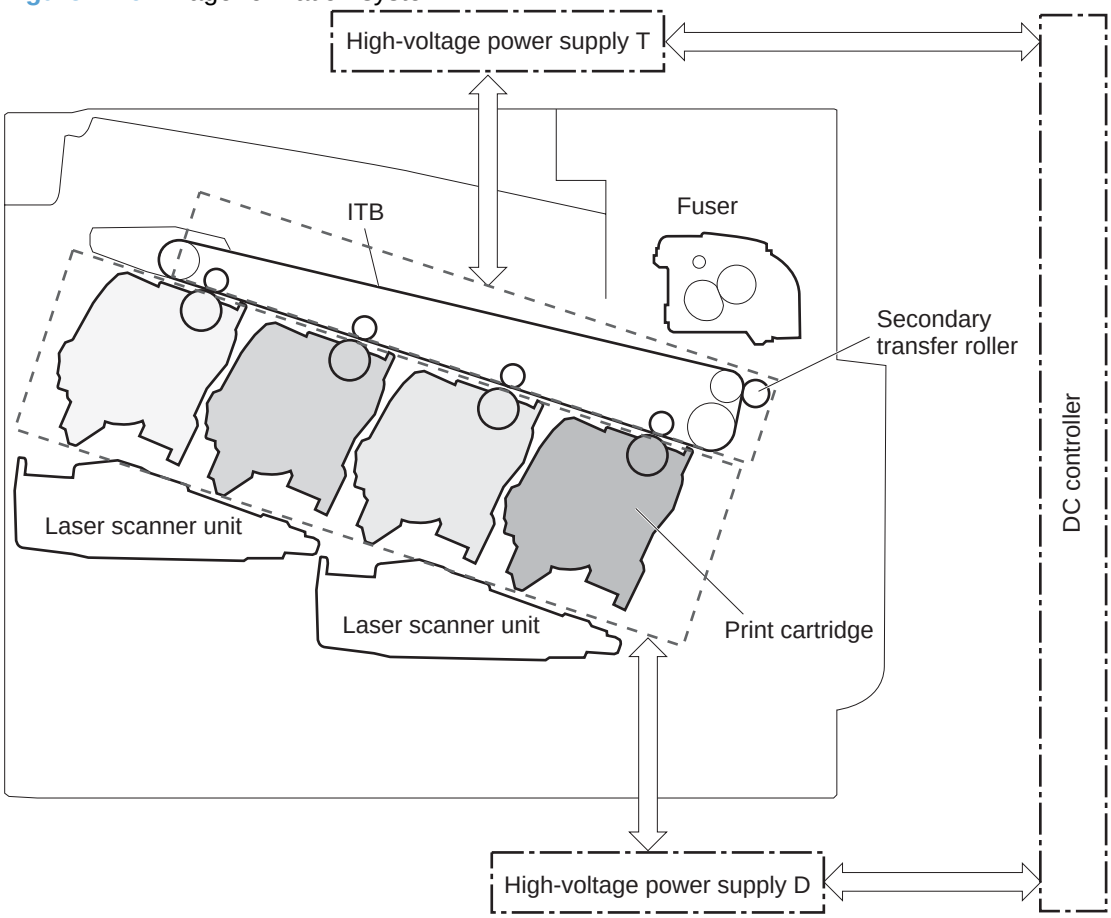

Figure 1-11 Image-formation drive system

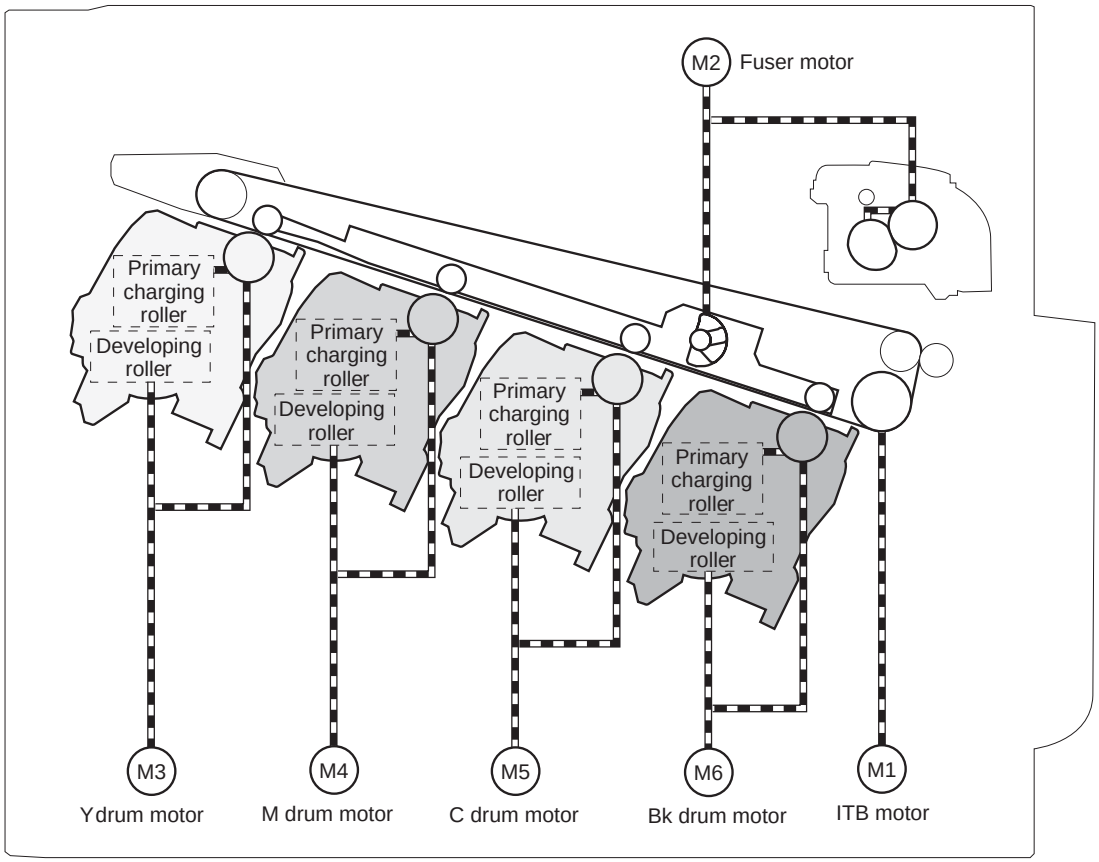

Image-formation process

The image-formation system consists of ten steps divided into six functional blocks.

Figure 1-12 Image-formation process

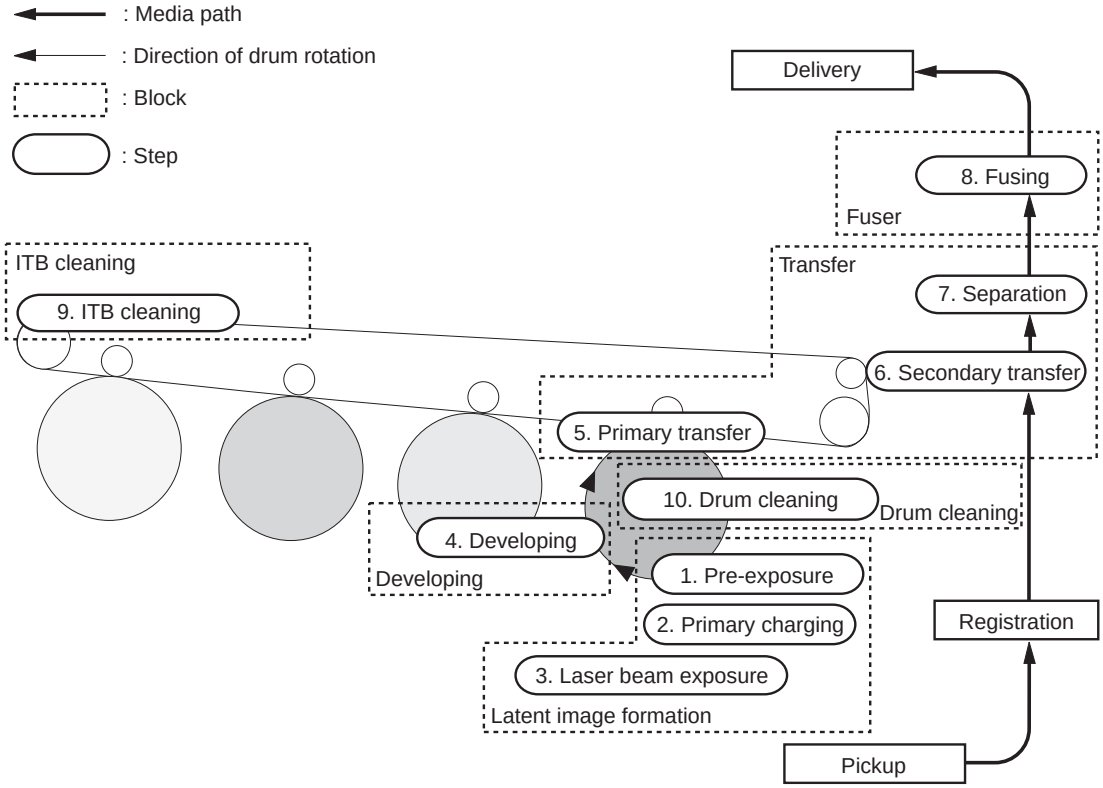

Functional block	Steps	Description
Latent image formation	1. Pre-exposure 2. Primary charging 3. Laser-beam exposure	An invisible latent image forms on the surface of the photosensitive drums.
Development	4. Development	Toner adheres to the electrostatic latent image on the photosensitive drums.
Transfer	5. Primary transfer 6. Secondary transfer 7. Separation	The toner image transfers to the ITB and later to the paper.
Fusing	8. Fusing	The toner fuses to the paper to make a permanent image.
ITB cleaning	9. ITB cleaning	Residual toner is removed from the ITB.
Drum cleaning	10. Drum cleaning	Residual toner is removed from the photosensitive drums.

Step 1: Pre-exposure

Light from the pre-exposure LED strikes the surface of the photosensitive drum to remove any residual electrical charges from the drum surface.

Figure 1-13 Pre-exposure

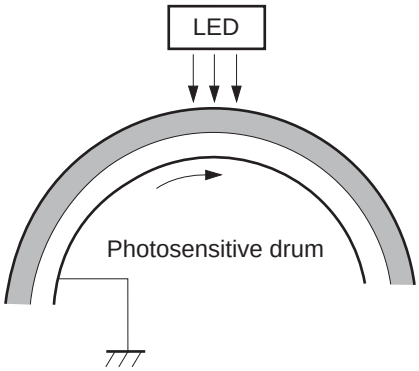

Step 2: Primary charging

The primary-charging roller contacts the photosensitive drum and charges the drum with negative potential.

Figure 1-14 Primary charging

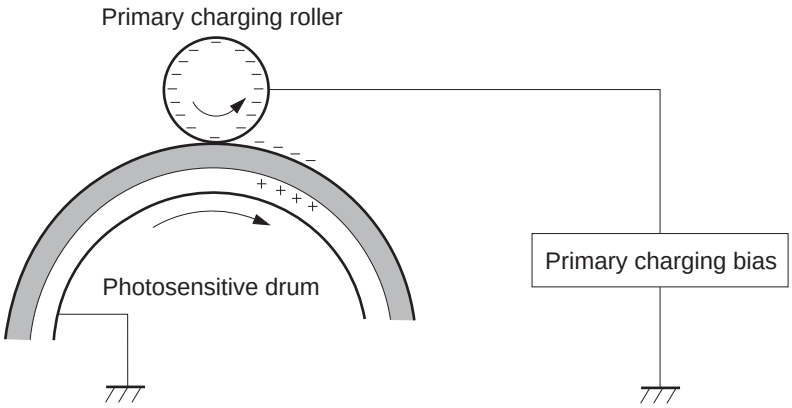

Step 3: Laser-beam exposure

The laser beam strikes the surface of the photosensitive drum in the areas where the image will form. The negative charge neutralizes in those areas, which are then ready to accept toner.

Figure 1-15 Laser-beam exposure

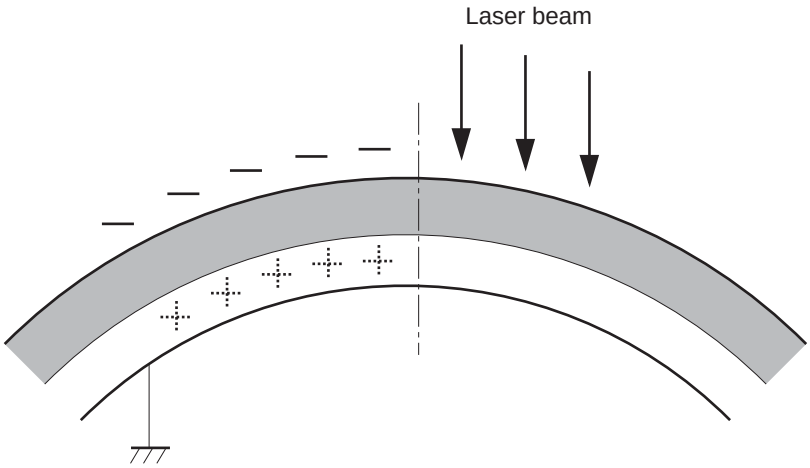

Step 4: Development

Toner acquires a negative charge as the developing cylinder contacts the developing blade. Because the negatively charged surface of the photosensitive drums have been neutralized where they have been struck by the laser beam, the toner adheres to those areas on the drums. The latent image becomes visible on the surface of each drum.

Figure 1-16 Development

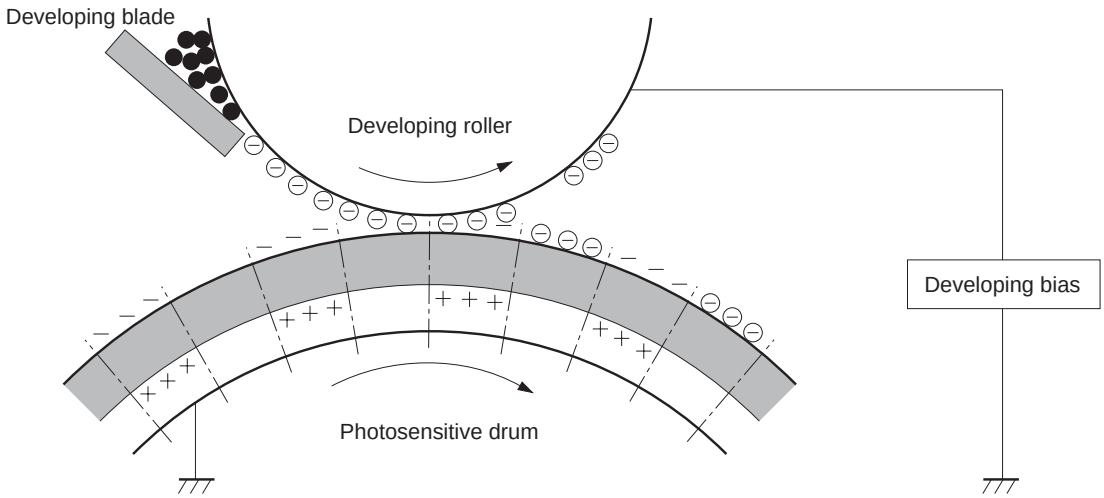

Step 5: Primary transfer

The positively charged primary-transfer rollers contact the ITB, giving the ITB a positive charge. The ITB attracts the negatively charged toner from the surface of each photosensitive drum, and the complete toner image transfers onto the ITB.

Figure 1-17 Primary transfer

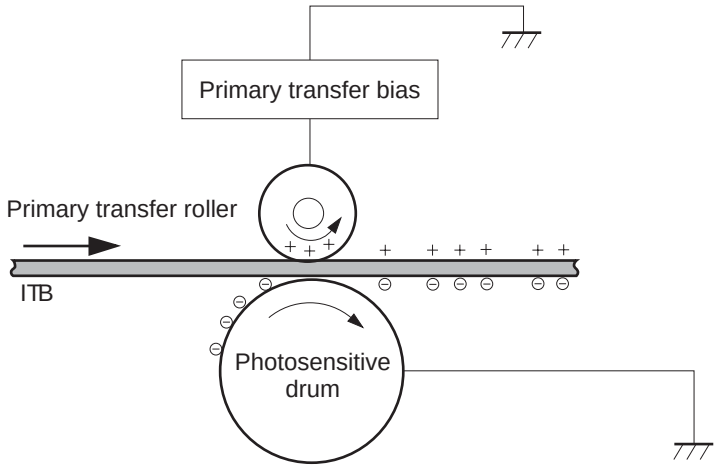

Step 6: Secondary transfer

The paper acquires a positive charge from the secondary-transfer roller, and so it attracts the negatively charged toner from the surface of the ITB. The complete toner image transfers onto the paper.

Figure 1-18 Secondary transfer

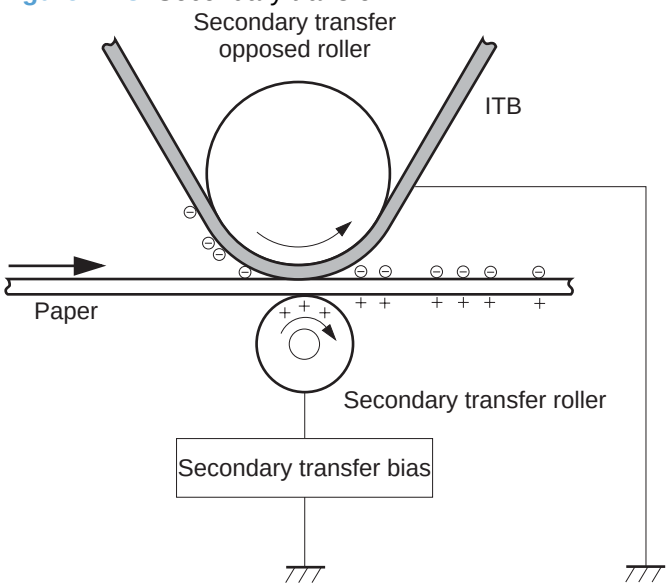

Step 7: Separation

The stiffness of the paper causes it to separate from the ITB as the ITB bends. The static-charge eliminator removes excess charge from the paper to make sure that the toner fuses correctly.

Figure 1-19 Separation

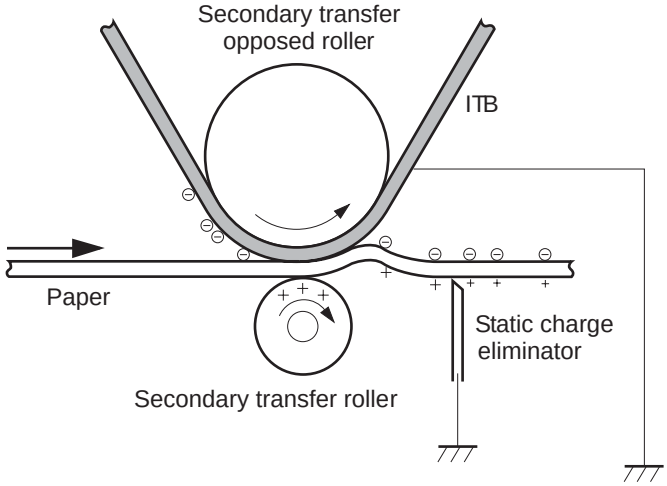

Step 8: Fusing

To create the permanent image, the paper passes through heated, pressurized rollers to melt the toner onto the page.

Figure 1-20 Fusing

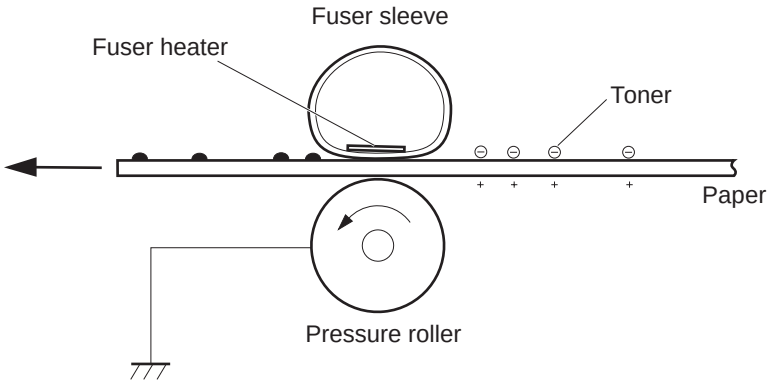

Step 9: ITB cleaning

The cleaning blade scrapes the residual toner off the surface of the ITB. The residual toner feed screw deposits residual toner in the toner collection box.

Figure 1-21 ITB cleaning

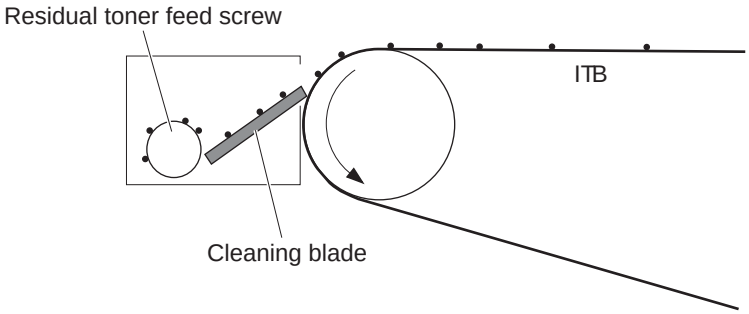

Step 10: Drum cleaning

The cleaning blade scrapes the residual toner off the surface of the photosensitive drum, and toner is deposited in the toner collection box in the cartridge.

Figure 1-22 Drum cleaning

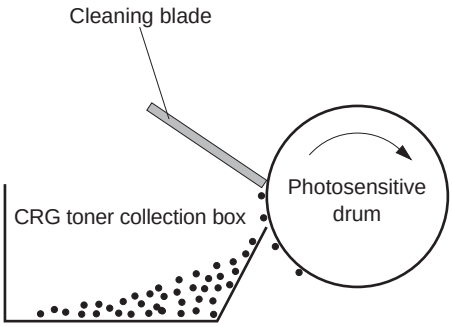

Print cartridge

Each print cartridge is filled with toner and consists of the following components:

- Photosensitive drum
- Developing unit
- Developing roller
- Primary-charging roller

The DC controller rotates the drum motor to drive the photosensitive drum, developing roller, and the primary-charging roller.

Figure 1-23 Print-cartridge system

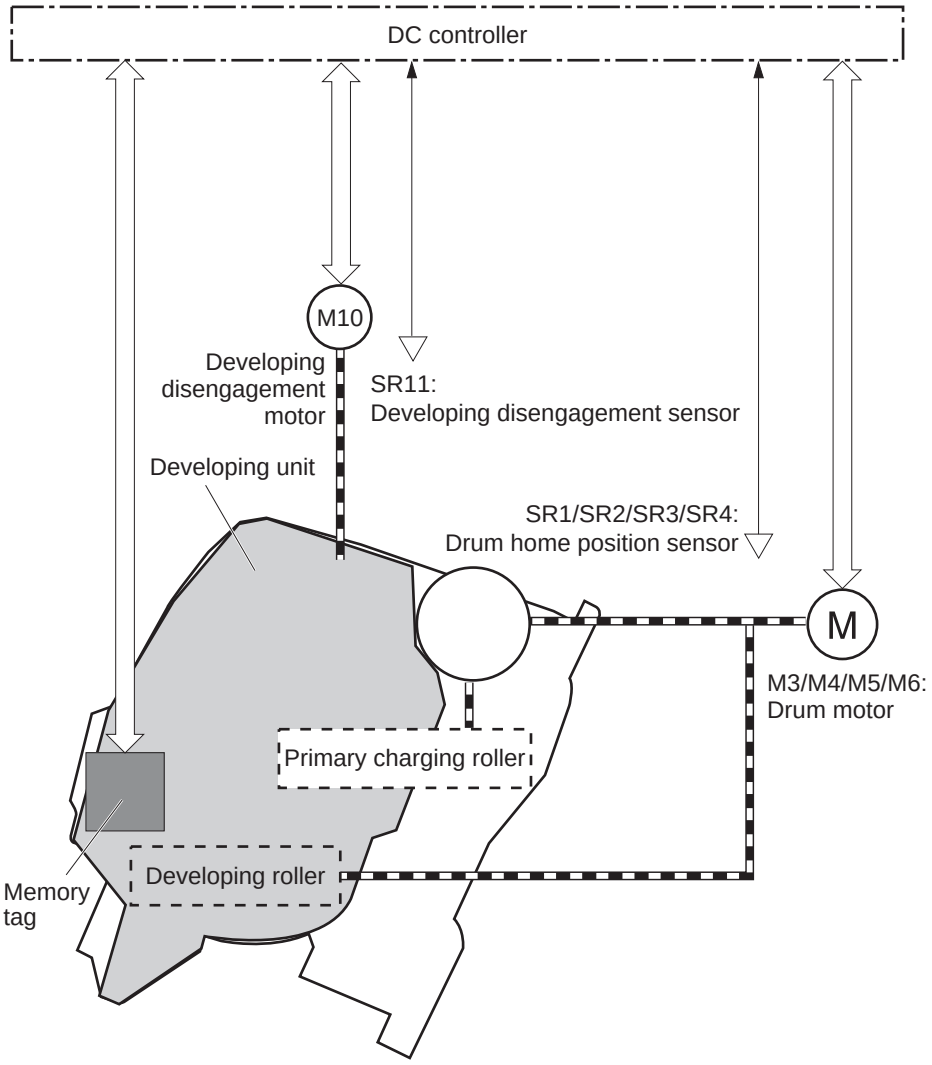

The DC controller rotates the drum motor to drive the photosensitive drum, developing unit, and primary charging roller.

The memory tag is a non-volatile memory chip that stores information about the usage for the print cartridge. The product reads and writes the data in the memory tag.

The DC controller determines a memory tag error and notifies the formatter when it fails to either read from or write to the memory tag.

- Cartridge presence detection: The DC controller detects the presence of the cartridges by monitoring the memory tag. The DC controller notifies the formatter when a cartridge is missing or installed in the incorrect slot.
- Toner level detection: The DC controller detects the remaining toner in a cartridge by the optical detection method and then notifies the formatter of the remaining toner level.
- Cartridge life detection: The DC controller detects the cartridge life by monitoring the total operating time or remaining toner level of the print cartridge. The DC controller determines a cartridge end of life and notifies the formatter when total operating time of the cartridge reaches a specified time or the cartridge runs out of toner.

Developing-roller engagement and disengagement

The product can print in full-color mode or in black-only mode. To print in black-only mode, the product disengages the developing rollers in the cyan, magenta, and yellow print cartridges which maximizes the life of the cartridges.

Figure 1-24 Developing-roller engagement and disengagement control

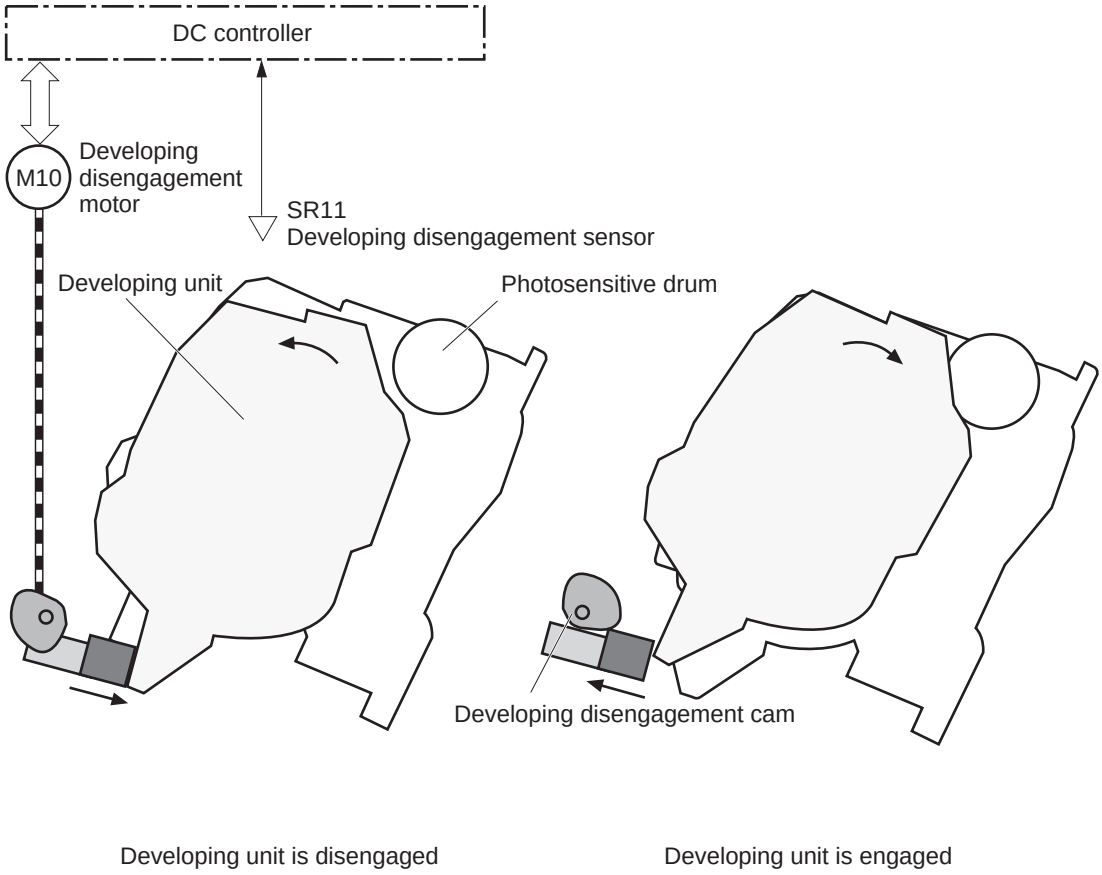

The developing-roller engagement and disengagement control operates as follows: When the product is turned on and when each print job is completed, all four of the developing units are disengaged from the photosensitive drums.

- The drive of the developing disengagement motor rotates the developing disengagement cam.
- As the cam rotates, the developing unit engages with or separates from the photosensitive drum.

When the print mode is full color, the developing units engage with the drums. When the print mode is black-only, only the black developing units engages with the drum.

The DC controller determines a developing disengagement motor failure and notifies the formatter when it does not detect a specified signal from the developing disengagement sensor during the developing unit engagement and disengagement operation.

Intermediate transfer belt (ITB) unit

The ITB unit accepts the toner images from the photosensitive drums and transfers the completed image to the paper. The ITB unit has the following main components:

- ITB
- ITB drive roller
- ITB-drive roller
- Primary-transfer roller
- ITB cleaner

The ITB motor drives the ITB drive roller, which rotates the ITB. The motion of the ITB causes the primary transfer rollers to rotate. The ITB cleaner cleans the ITB surface.

Figure 1-25 ITB unit

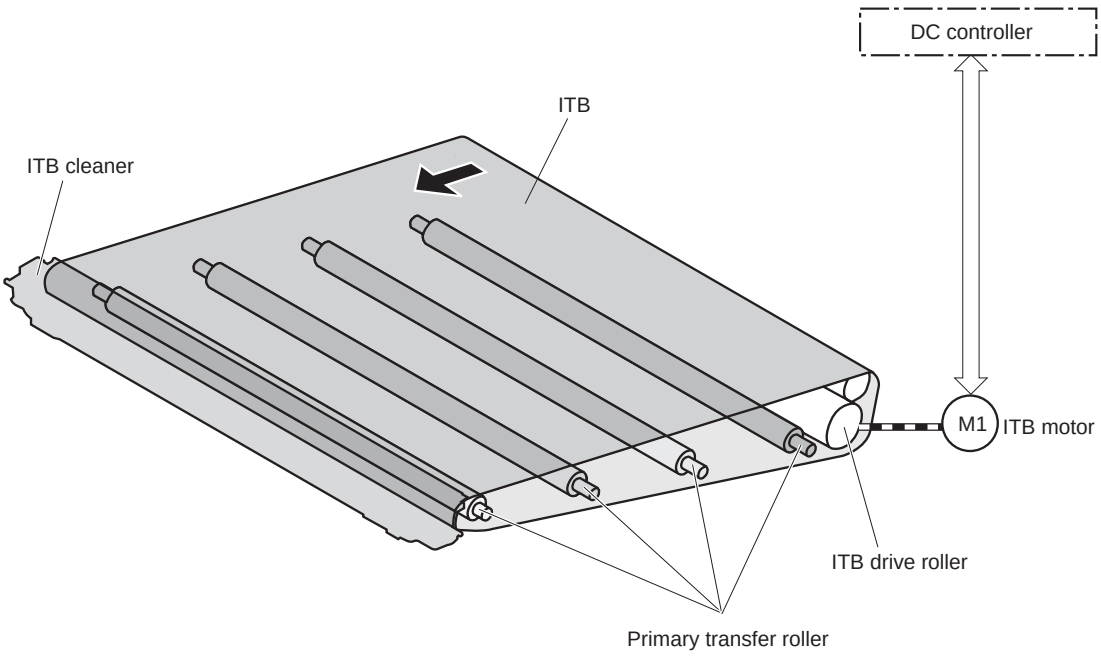

Primary-transfer-roller engagement and disengagement

The sequence of the primary-transfer-roller engagement and disengagement control is as follows:

1. The fuser motor turns on the primary-transfer disengagement solenoid and rotates the primary-transfer-roller disengagement cam.
2. As the cam rotates, the Y/M/C primary-transfer-roller slide plate or the Bk primary-transfer-roller slide plate moves to the right or left, which causes the primary-transfer roller to move up or down.
3. The ITB engages with or separates from the photosensitive drum depending on the movement of the primary-transfer rollers.

Depending on the requirements of the print job, the primary-transfer rollers engage with the ITB so it can receive toner from the photosensitive drums. The primary-transfer roller has three engagement states.

Table 1-10 Primary-transfer-roller engagement states

All rollers disengaged	The ITB is disengaged from all the four photosensitive drums. This state is the home position for the ITB unit.
All rollers engaged	The ITB is engaged with all four photosensitive drums. The state for full-color printing.
Black roller engaged	The ITB is engaged with only the black photosensitive drum. The state for black-color mode printing .

The DC controller determines a primary-transfer-roller disengagement failure and notifies the formatter when it does not detect a signal from the primary-transfer disengagement sensor even though the primary-transfer disengagement solenoid is turned on.

If the DC controller does not receive the expected signal from the ITB home-position sensor when the primary-transfer-roller engages or disengages, but the primary-transfer-roller disengagement motor is rotating, the DC controller determines that the primary-transfer-disengagement mechanism has failed, and notifies the formatter.

The DC controller detects whether the ITB unit is new by monitoring the new ITB unit sensor. The DC controller determines the ITB unit is at end of life and notifies the formatter when a specified number of pages are printed after the ITB unit is replaced. If swapping ITB units between two products for troubleshooting purposes, be sure to return the ITB units to their original products to maintain the correct life count.

NOTE: A new ITB has a flag that causes the ITB life counter to be reset. When an ITB is installed in the product, it cannot be removed and used again as a new ITB.

The DC controller detects the presence of an ITB unit by monitoring the primary-transfer-roller disengagement sensor. The DC controller turns on the primary-transfer disengagement solenoid for specified times during an initial rotation period when the following events occur:

- The product is turned on.
- The product exits sleep mode.
- The door is closed.

The DC controller determines the absences of an ITB unit and notifies the formatter when it does not detect a specified signal from the new primary transfer-roller disengagement sensor.

Figure 1-26 Three states of primary-transfer-roller engagement and disengagement

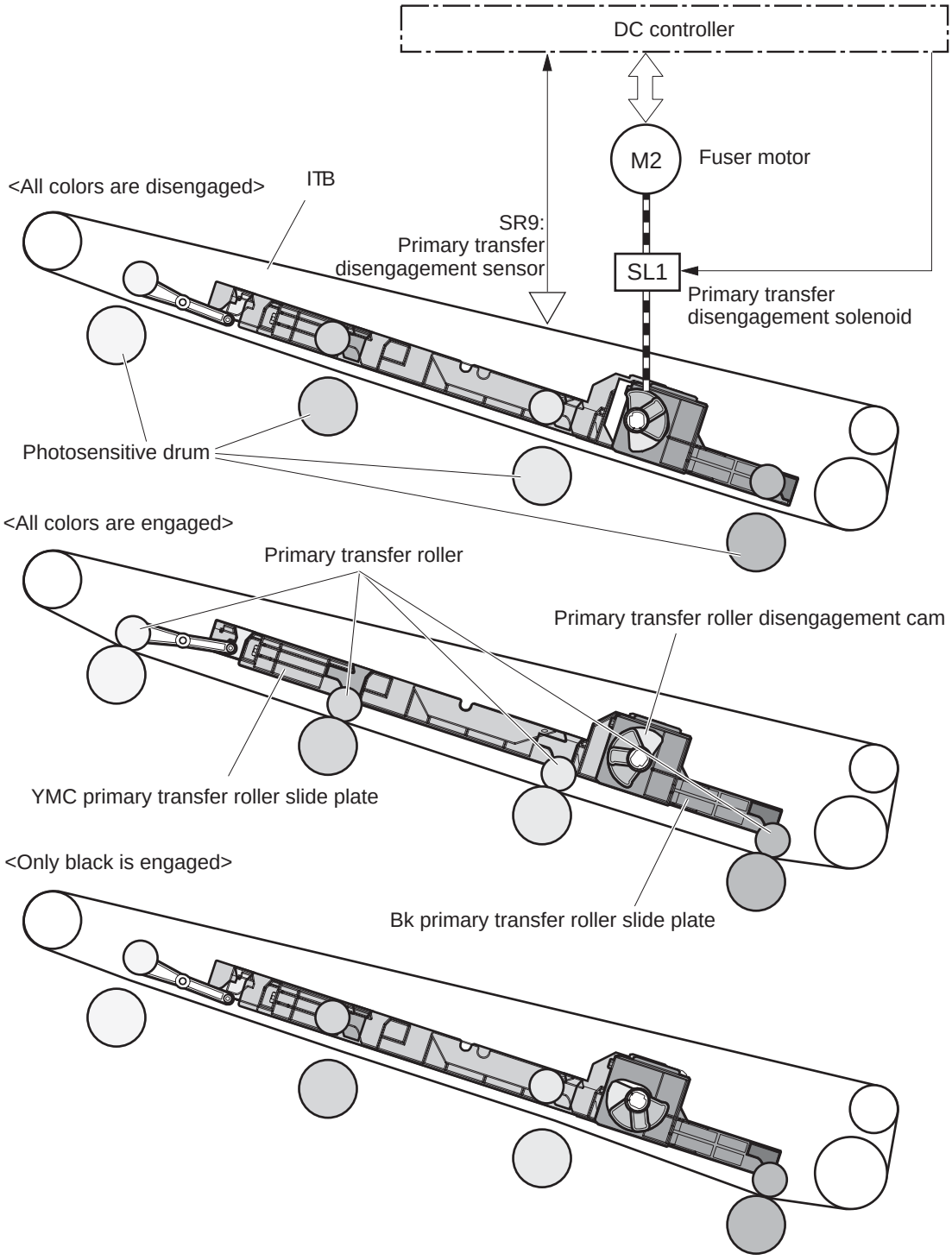

ITB cleaning

The cleaning blade in the ITB cleaner scrapes the residual toner off the ITB surface. The residual toner feed screw deposits the residual toner to the residual toner feed unit. The ITB motor and the residual toner feed motor drive the screw. The DC control detects whether the toner collection box is full, using the residual-toner full sensor, and then notifies the formatter.

Figure 1-27 ITB cleaning process

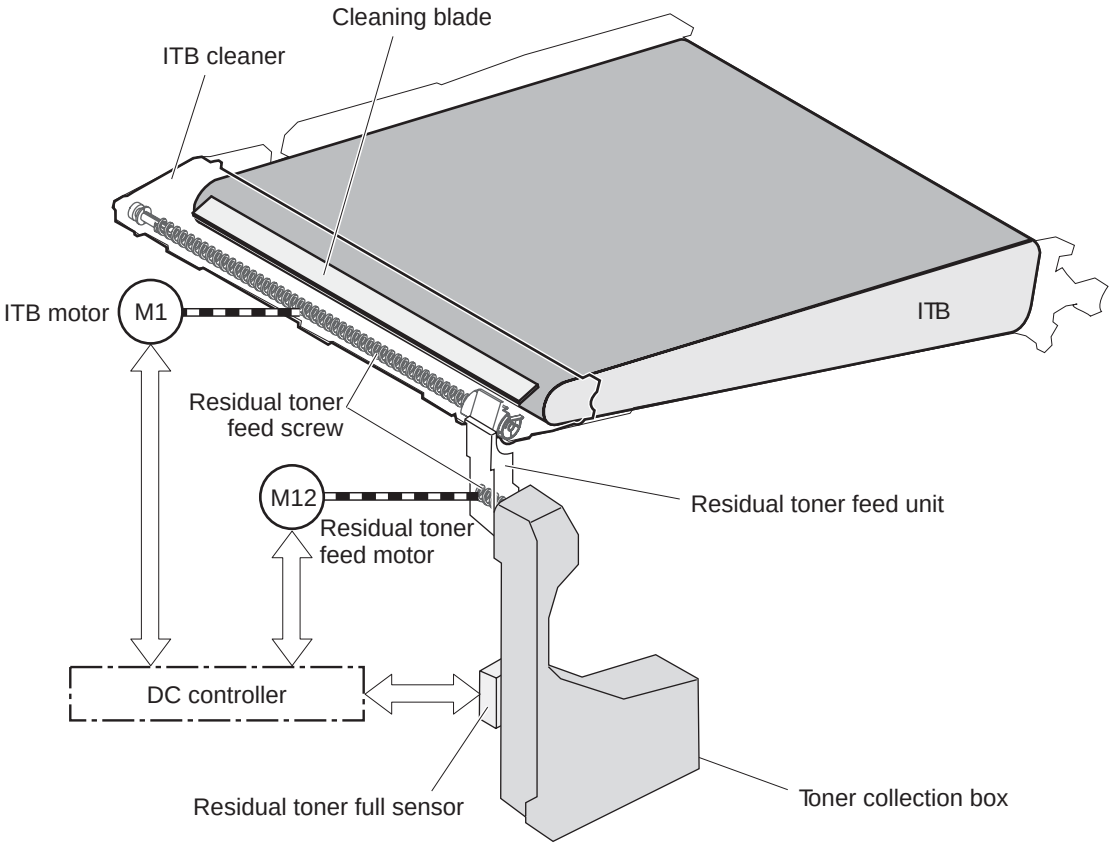

Calibration

The product calibrates itself to maintain excellent print quality. Calibration corrects color-misregistration and color-density variation.

During calibration, the product places a specific pattern of toner on the surface of the ITB. Sensors at the end of the ITB read the toner pattern to determine if adjustments are necessary.

NOTE: The product performs a drum-speed adjustment (DSA) during the full calibration operation. The DSA compensates for variations between each drum and the speed of the ITB surface.

Color-misregistration control

Internal variations in the laser/scanners can cause the toner images to become misaligned. The color-misregistration control corrects the following problems:

- Horizontal scanning start position
- Horizontal scanning magnification
- Vertical scanning start position

The DC controller forms a pattern of toner on the surface of the ITB and measures a misaligned length with the RD sensor.

Figure 1-28 Toner patterns for calibration

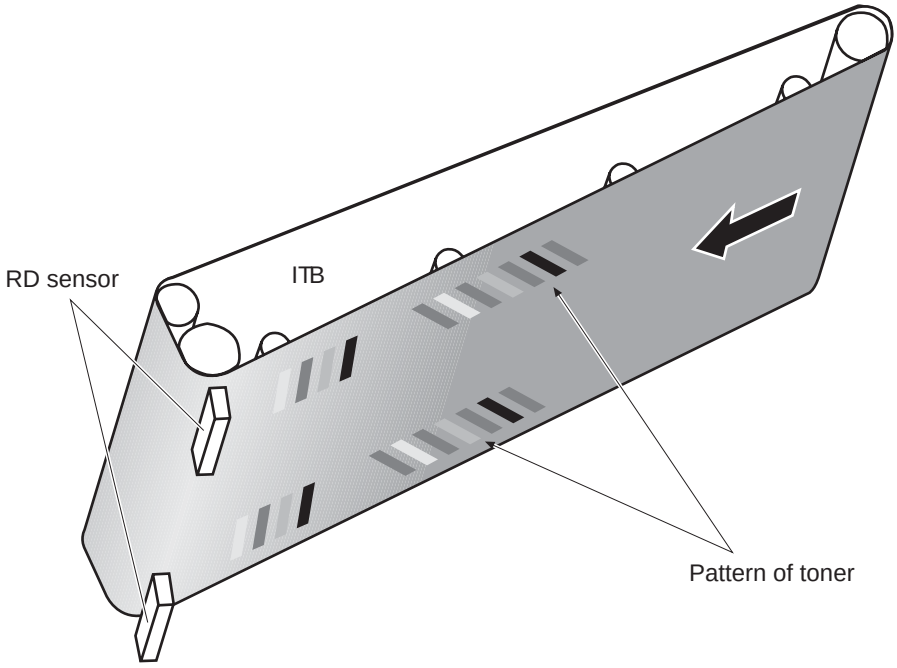

The DC controller signals the formatter to perform the color-misregistration control when one of the following events occur:

- A cartridge or the ITB is replaced.
- A specified number of pages have printed.
- The formatter sends a command.

The DC controller determines an RD sensor failure and notifies the formatter if it detects data from the RD sensor that is not in a specified range, when the product is turned on or when the color-misregistration control starts.

Image-stabilization control

NOTE: The product contains a thermal sensor, located within the TCU level detection sensor, which monitors the temperature in the cartridge area and uses this information to make adjustments during CPR control.

Environmental changes or deterioration of the photosensitive drums and toner can cause variations in the image density. The image-stabilization control reduces these fluctuations.

Table 1-11 Image-stabilization controls

Image density control (DMAX)	This control corrects variations in image density related to deterioration of the photosensitive drum or the toner. The DC controller adjusts the high-voltage biases to correct the problem under the following conditions: The image-stabilization control calibrates each high-voltage bias to stabilize the fluctuations in image density caused by deterioration of the photosensitive drums or toner or because of environmental changes. The DC controller determines the product's environment based on the surrounding temperature and humidity data from the environment sensor. The DC controller calibrates the biases according to the detected environment and usage condition of the print cartridge to obtain an appropriate image. The DC controller determines an environment sensor failure and notifies the formatter when it detects environmental data from the environment sensor with out of specified value. The DC controller commands the formatter to control the image density under the following conditions • The temperature of the main thermistor is too low when the product is turned on. • A print cartridge or the ITB is replaced. • A specified number of pages have printed. • After a specific period of the completion of a previous DMAX • The environment changes for a specified condition after a previous DMAX.
Image halftone control (DHALF)	The formatter performs this control to calibrate the halftone, based on the halftone-density measurements, under the following conditions: • The formatter sends a command. • DMAX is completed. The DC controller determines an RD sensor failure and notifies the formatter if it detects data from the RD sensor out of a specified range.

The DC controller determines a RD sensor failure and notifies the formatter if it detects an out-of-specified-data value from the RD sensor when the product is turned on or when the color misregistration control starts.

Pickup, feed, and delivery system

The pickup, feed, and delivery system uses a series of rollers to move the paper through the product.

Figure 1-29 Paper path

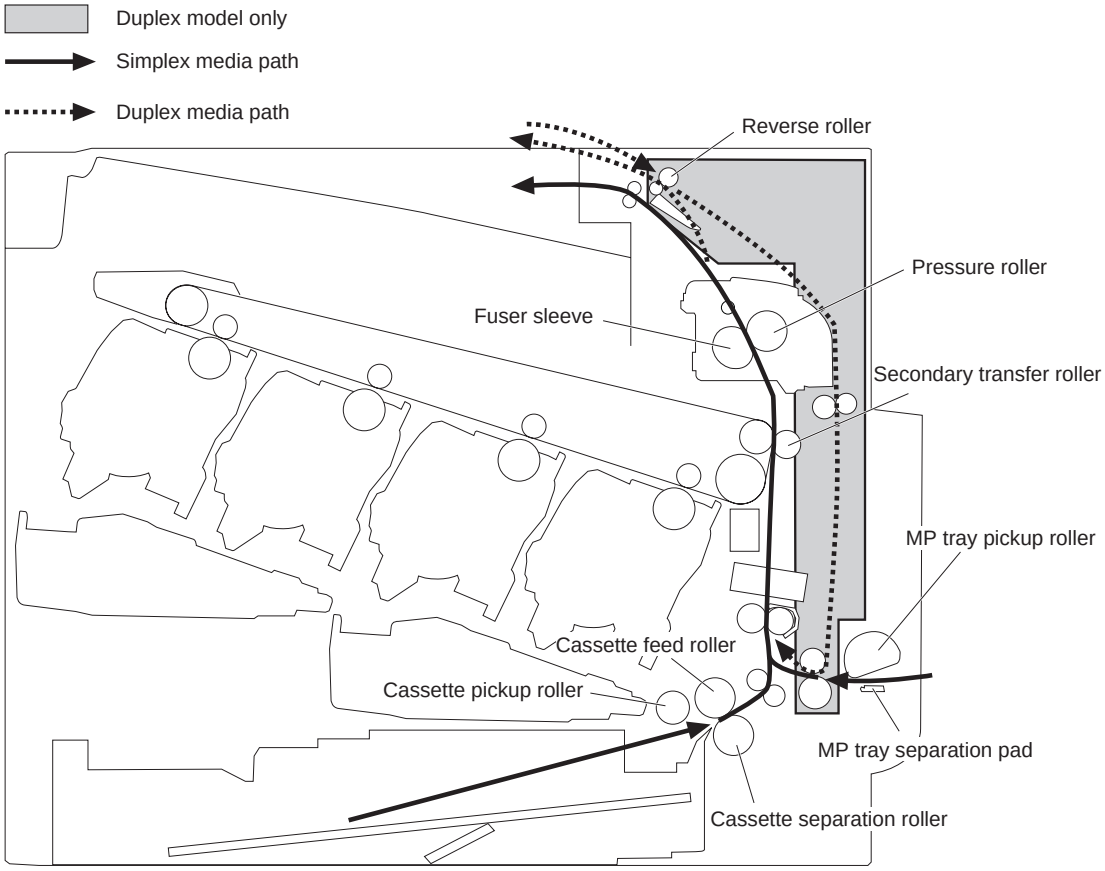

Figure 1-30 Switches and sensors for the pickup, feed, and delivery system

Duplex model only

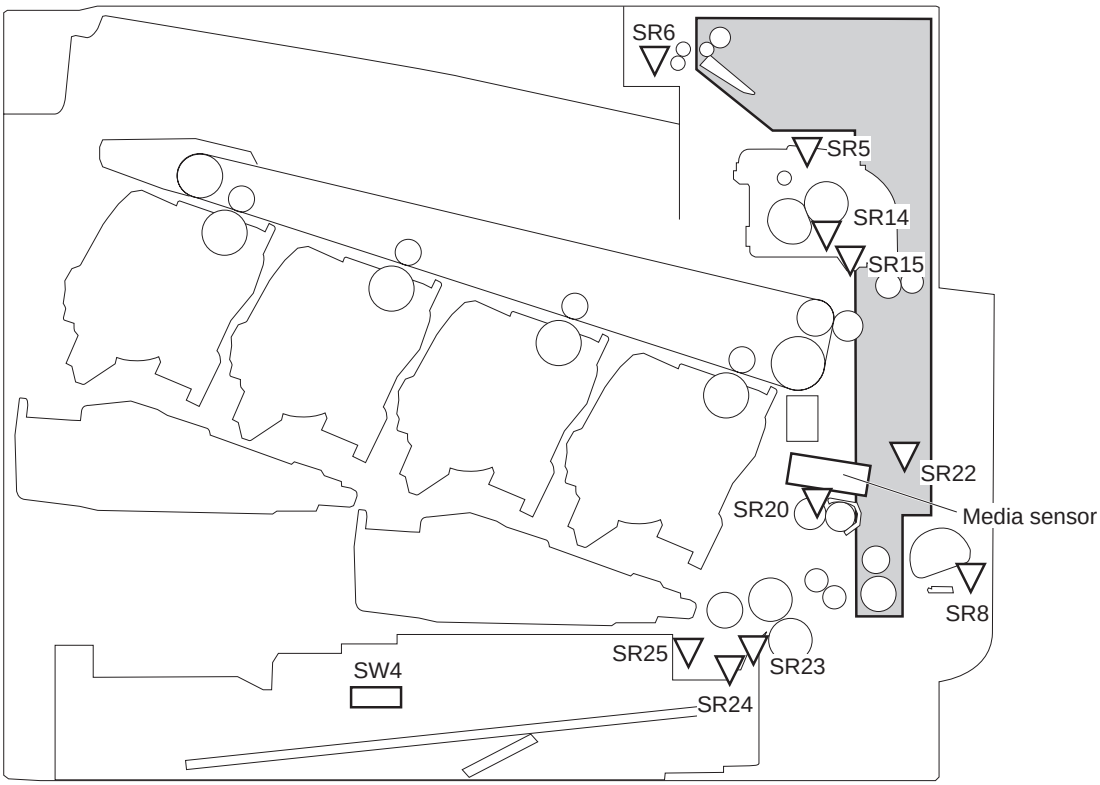

Table 1-12 **Switches and sensors for the pickup, feed, and delivery system**

Abbreviation	Component
SR5	Fuser delivery sensor
SR6	Delivery tray media full sensor
SR8	MP tray media presence sensor
SR14	Loop sensor 1
SR15	Loop sensor 2
SR20	TOP (top of page) sensor
SR21	MP tray media-presence sensor
SR22	Duplex re-pickup sensor (duplex models only)
SR23	Cassette-media stack-surface sensor 1
SR24	Cassette-media stack-surface sensor 2
SR25	Cassette presence sensor
SW4	Cassette media size switch
	Media sensor

Figure 1-31 Motors and solenoids for the pickup, feed, and delivery system

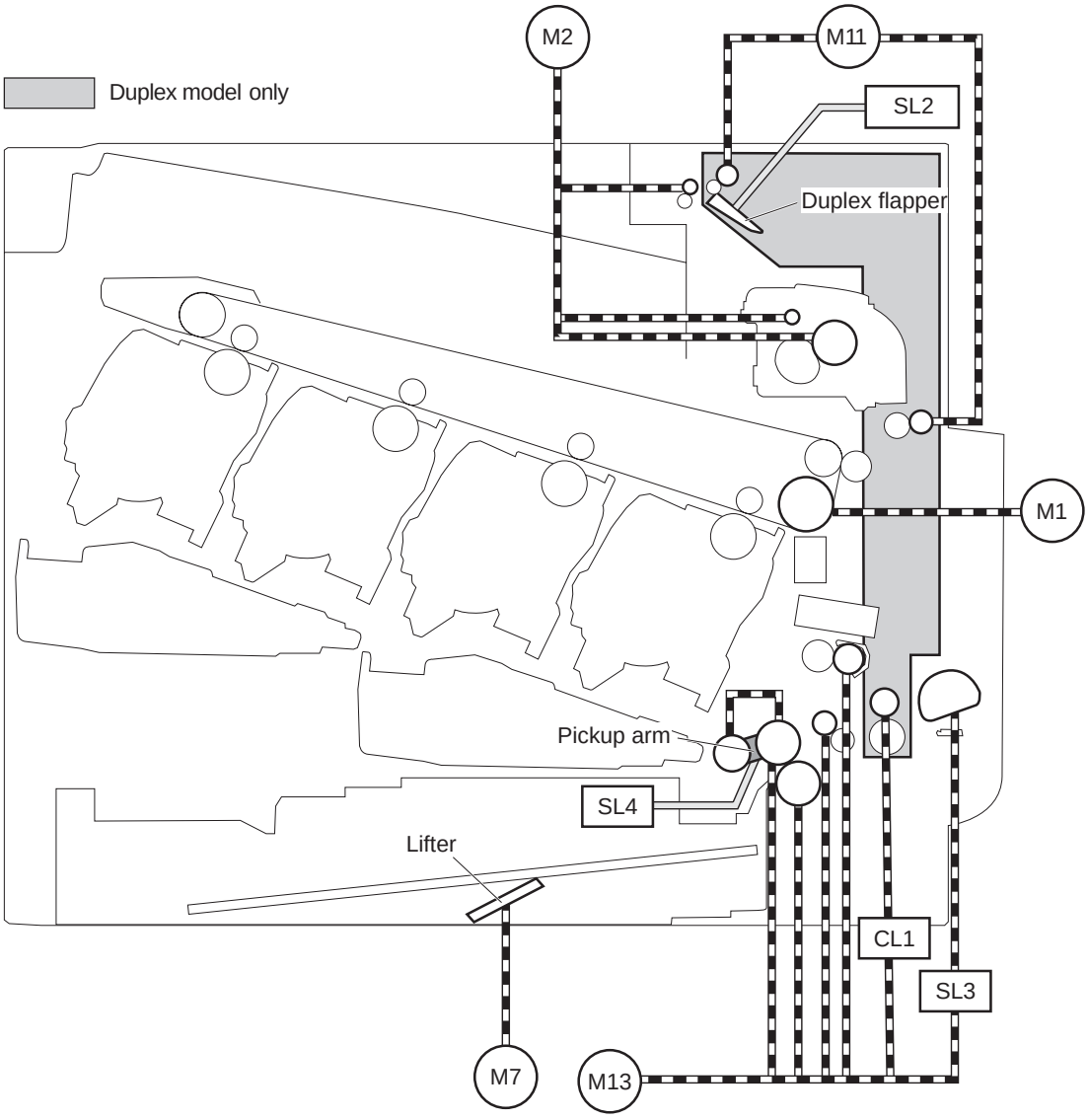

Table 1-13 **Motors and solenoids for the pickup, feed, and delivery system**

Abbreviation	Component
M1	ITB motor
M2	Fuser motor
M7	Lifter motor
M11	Duplex reverse motor (duplex models only)
M13	Pickup motor
CL1	Duplex re-pickup clutch (duplex models only)
SL2	Duplex reverse solenoid (duplex models only)
SL3	Multipurpose tray pickup solenoid
SL4	Cassette pickup solenoid

The pickup, feed, and delivery system is divided into the following three blocks:

- Pickup-and-feed block: From each pickup source to the fuser inlet
- Fuser-and-delivery block: From the fuser to the delivery destination
- Duplex block: From the duplex reverse unit to duplex re-pickup unit (for duplex models only)

Figure 1-32 Three main units of the pickup, feed, and delivery system

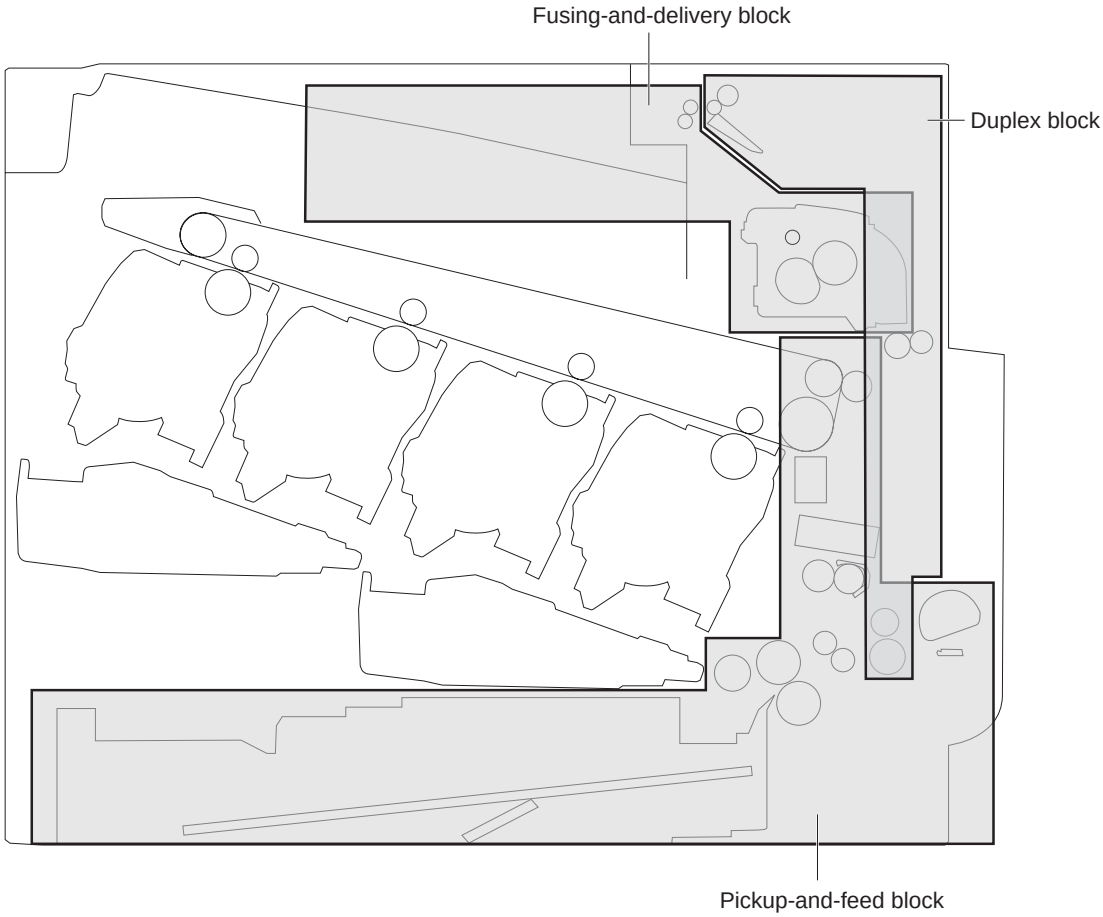

Pickup-and-feed unit

The pickup-and-feed unit picks an individual sheet of paper from the multipurpose tray or the cassettes, carries it through the secondary-transfer unit, and feeds it into the fuser.

Figure 1-33 Pickup-and-feed unit

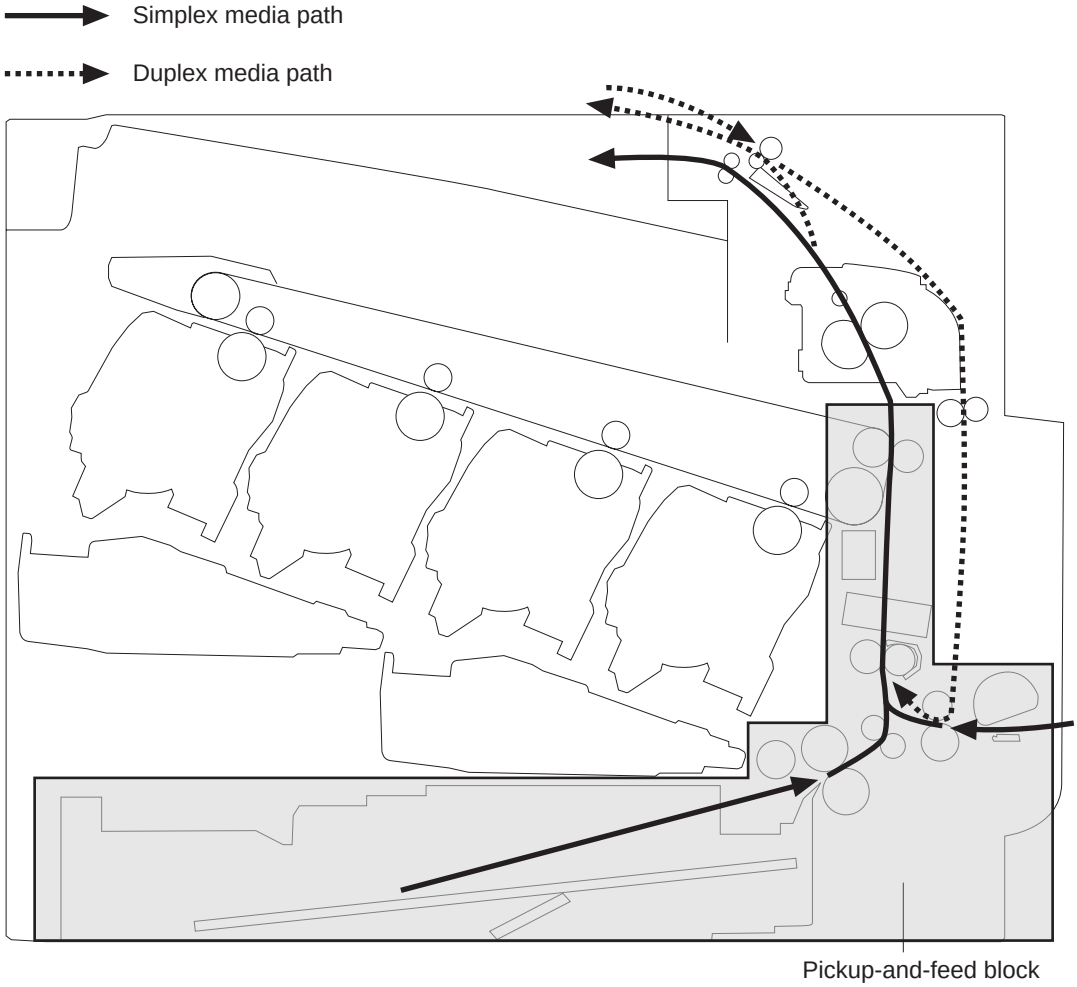

Cassette pickup

The sequence of steps for the cassette-tray pickup operation is the following:

1. The product is turned on or the cassette is inserted.
2. The cassette lift-up operation raises the lifting plate so paper can be picked up.
3. The pickup motor rotates when a print command is received from the formatter.
4. The cassette pickup roller, cassette feed roller, and cassette separation roller rotate.
5. The cassette pickup solenoid turns on at a specified time.
6. The cassette pickup cam rotates.

7. As the pickup arm lowers, the cassette pickup roller touches the surface of the paper stack.

8. One sheet of paper feeds into the product.

Figure 1-34 Cassette-pickup mechanism

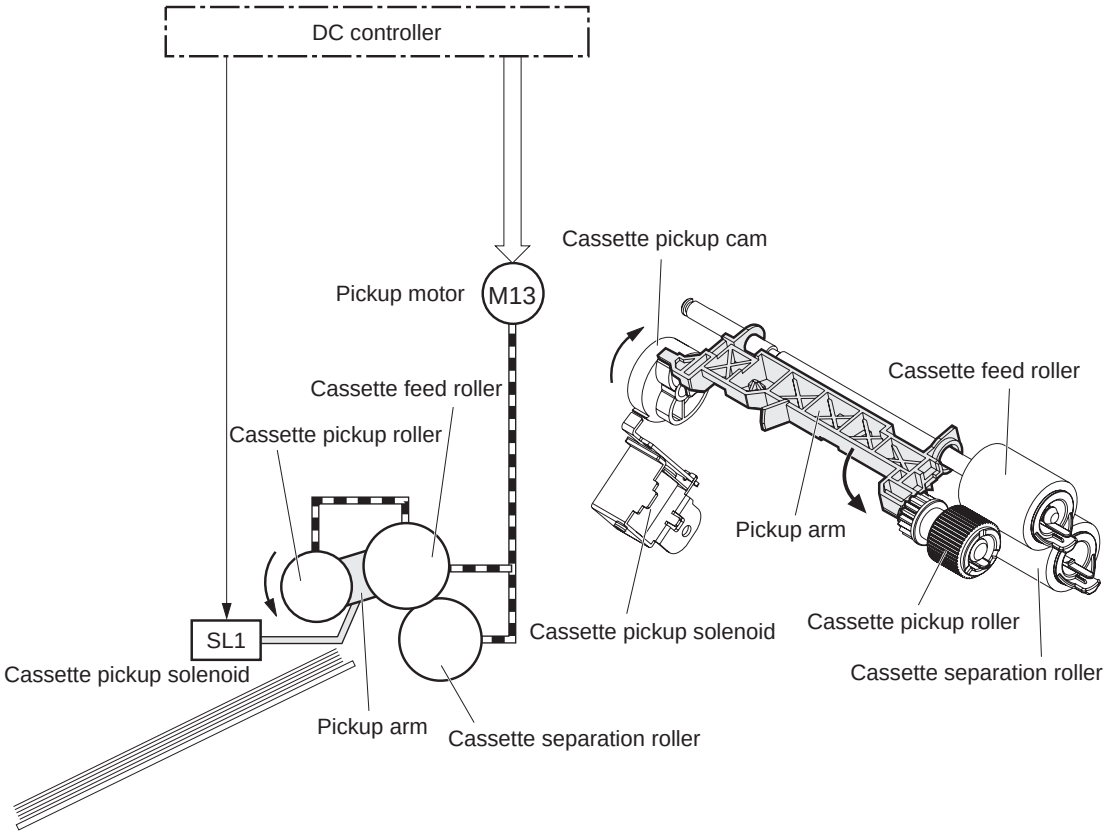

Cassette-presence detection

The product detects the size of the paper loaded in the cassette and the presence of the cassette by monitoring the cassette media size switch. The DC controller notifies the formatter when it determines the absence of the cassette.

Paper size	Cassette media size switch		
	Top switch	Center switch	Bottom switch
Universal	ON	ON	ON
A5	OFF	OFF	ON
B5	OFF	ON	ON
Executive	ON	OFF	ON
Letter	OFF	ON	OFF
A4	ON	OFF	OFF
Legal	ON	ON	OFF
Cassette absence	OFF	OFF	OFF

Cassette lift operation and cassette paper-presence detection

The product keeps the paper stack surface at the correct pickup position. The cassette lift-up operation is performed under the following conditions:

- The product is turned on
- The cassette is inserted
- The paper stack surface in the cassette lowers

Figure 1-35 Cassette lift mechanism

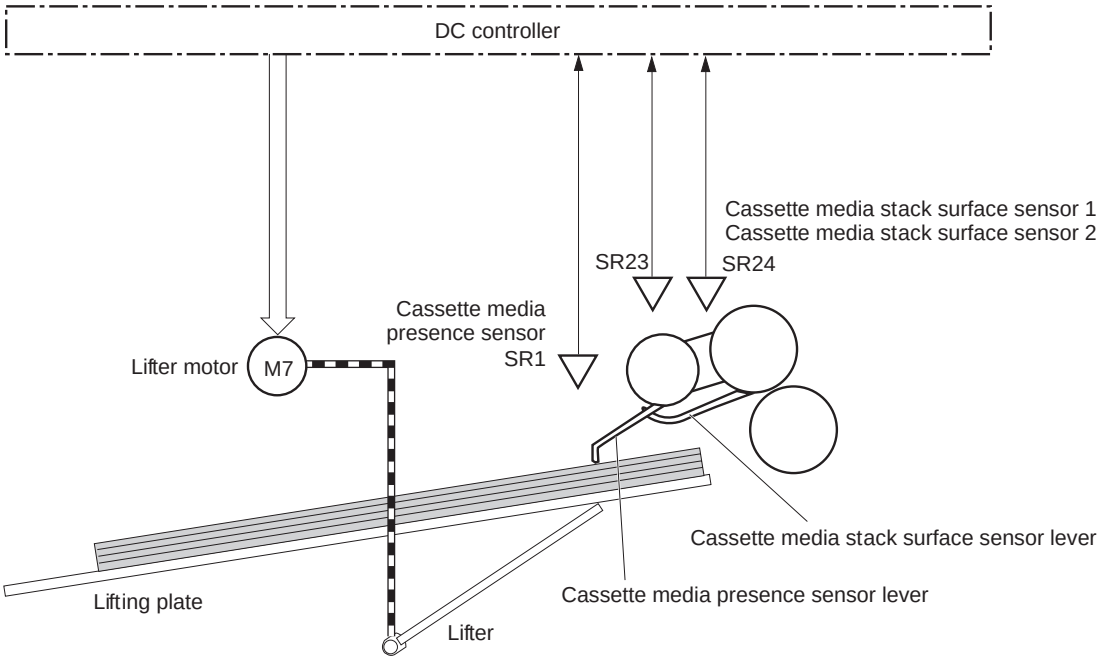

The operational sequence of the cassette lift-up is as follows:

1. The lifter motor rotates and the lifter moves up.
2. When the cassette-media stack surface sensor 2 detects the stack surface of media, the lifter motor stops.
3. The lifter motor rotates again to lift the lifter when the cassette-media stack surface sensor 1 detects the stack surface and then lowers during printing.

When a cassette-media stack surface sensors does not detect the stack surface within a specified time period after the lifter motor starts rotating, the DC controller determines a lifter motor failure and notifies the formatter

Cassette multiple-feed prevention

In the cassette, a separation roller prevents multiple sheets of paper from entering the paper path. The cassette pickup roller drives the separation roller through a sheet of paper.

The rotation of the cassette feed roller through the sheet drives the cassette separation roller. Because it is equipped with a torque limiter, only one sheet is fed into the product.

The low friction force between the sheets weakens the driving force from the cassette feed roller. Therefore, the separation roller is driven by its own driving force and holds back any multiple-fed sheets from the cassette.

Figure 1-36 Multiple-feed prevention

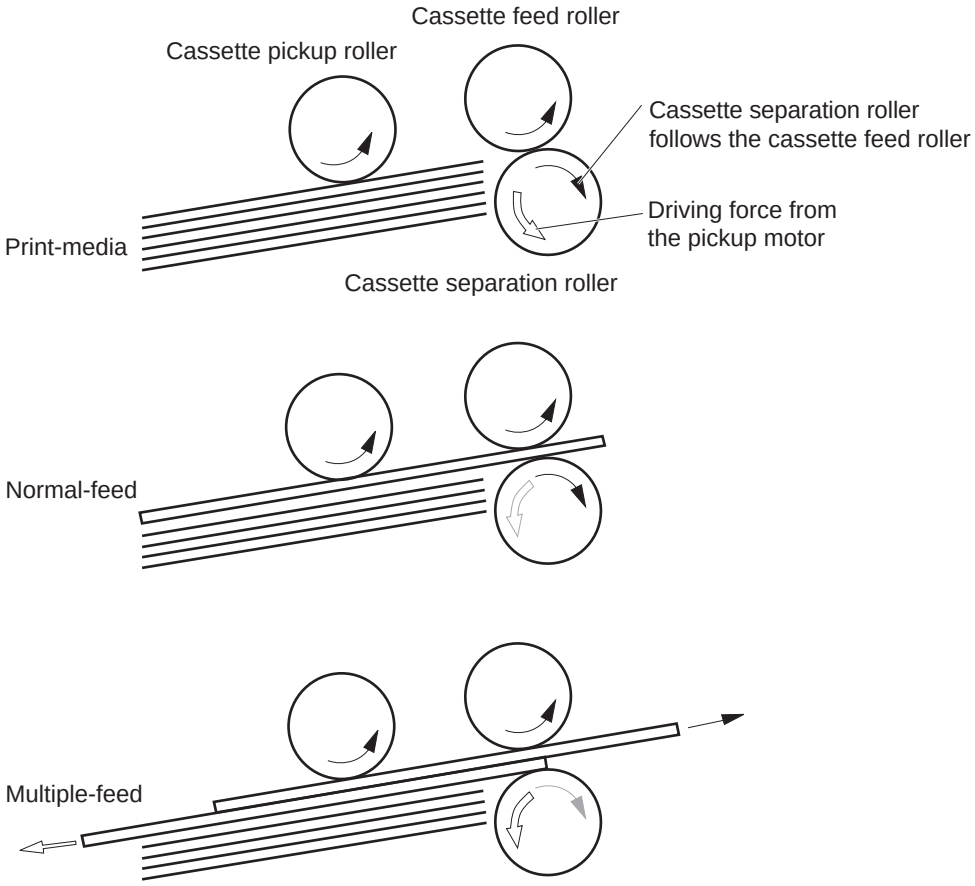

Multipurpose tray pickup

The product picks up one sheet of paper from the MP tray.

The sequence of steps for the multipurpose tray pickup operation as follows:

1. The pickup motor reverses when a print command is received from the formatter.
2. When the DC controller turns on the MP tray pickup solenoid, the MP tray pickup roller rotates and the lifting plate lifts.
3. As the lifting plate rises, the paper is picked up.
4. The multipurpose tray separation pad removes any multiple-fed sheets, and one sheet is fed into the product.

The MP-tray media-presence sensor (SR8) detects whether paper is present in the MP tray.

Figure 1-37 Multipurpose tray pickup mechanism

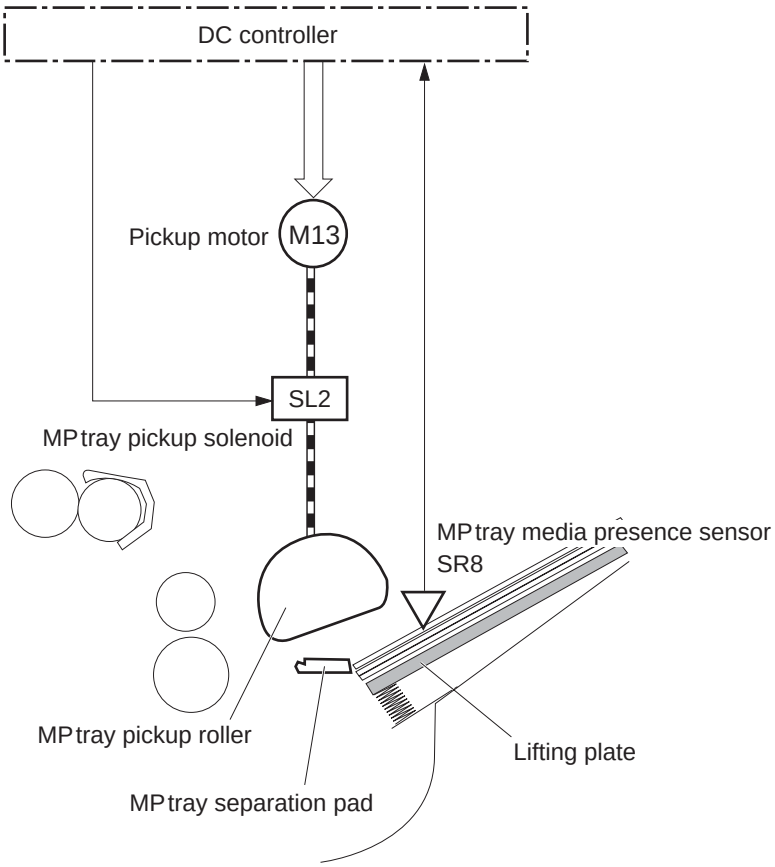

Paper feed

After the pickup operation, the paper feeds through the product and into the fuser.

1. The paper picked up from the cassette is fed to the registration unit as the pickup motor rotates. The paper picked up from the multipurpose tray is fed to the registration unit as the pickup motor rotates. The duplex model has the duplex feed clutch. The driving force of the pickup motor is transmitted to the duplex re-pickup roller by turning on the clutch.
2. The registration shutter corrects the skew-feed.
3. When the TOP sensor detects the leading edge of paper, the DC controller stops the paper so that the media sensor detects the type of paper.
4. The DC controller controls the rotational speed of the pickup motor to align the paper with the leading edge of the toner image on the ITB.
5. The ITB motor rotates the ITB.
6. The toner image on the ITB is transferred onto the paper, and the paper is fed to the fuser.

The DC controller notifies the formatter of a paper size mismatch error when the paper length detected by the TOP sensor does not match the paper size specified by the formatter.

Figure 1-38 Paper-feed mechanism

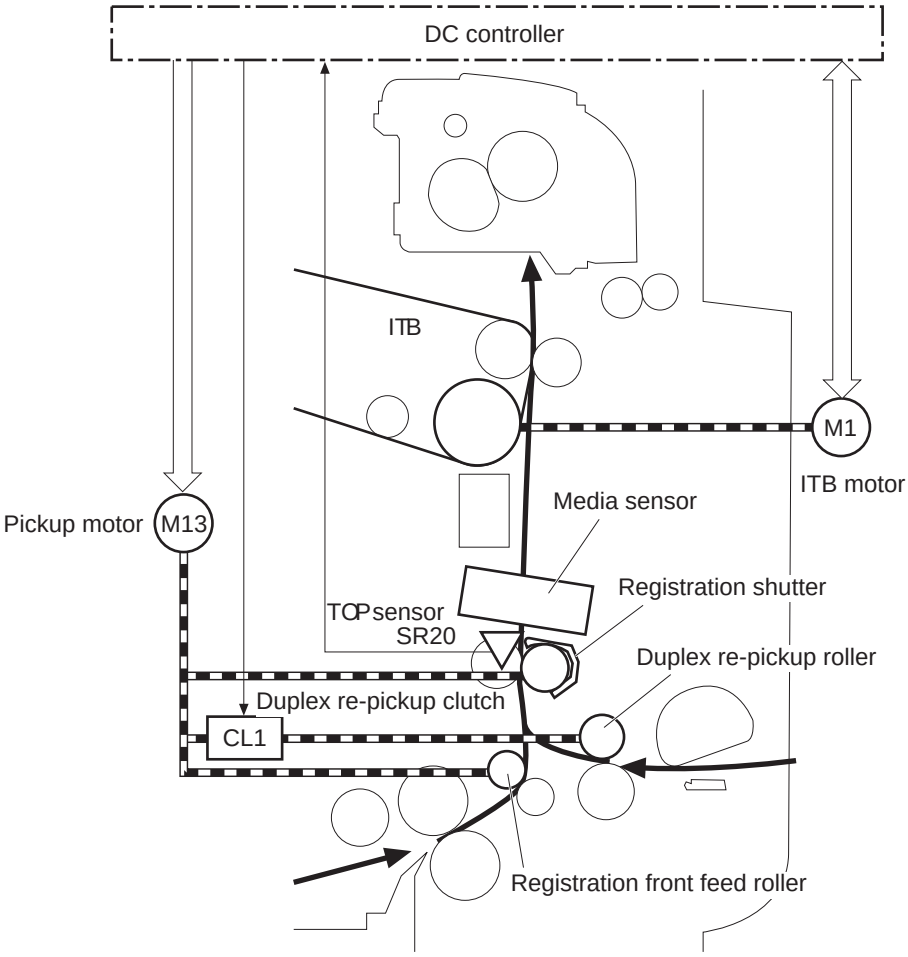

Skew-feed prevention

The product can straighten the paper without slowing the feed operation.

1. The leading edge of paper strikes the registration shutter, and the leading edge is aligned with the shutter.
2. As the feed rollers keep pushing the paper, the paper warps.
3. When the force is great enough, the registration shutter opens, and the paper passes through and straightens

Figure 1-39 Skew-feed prevention

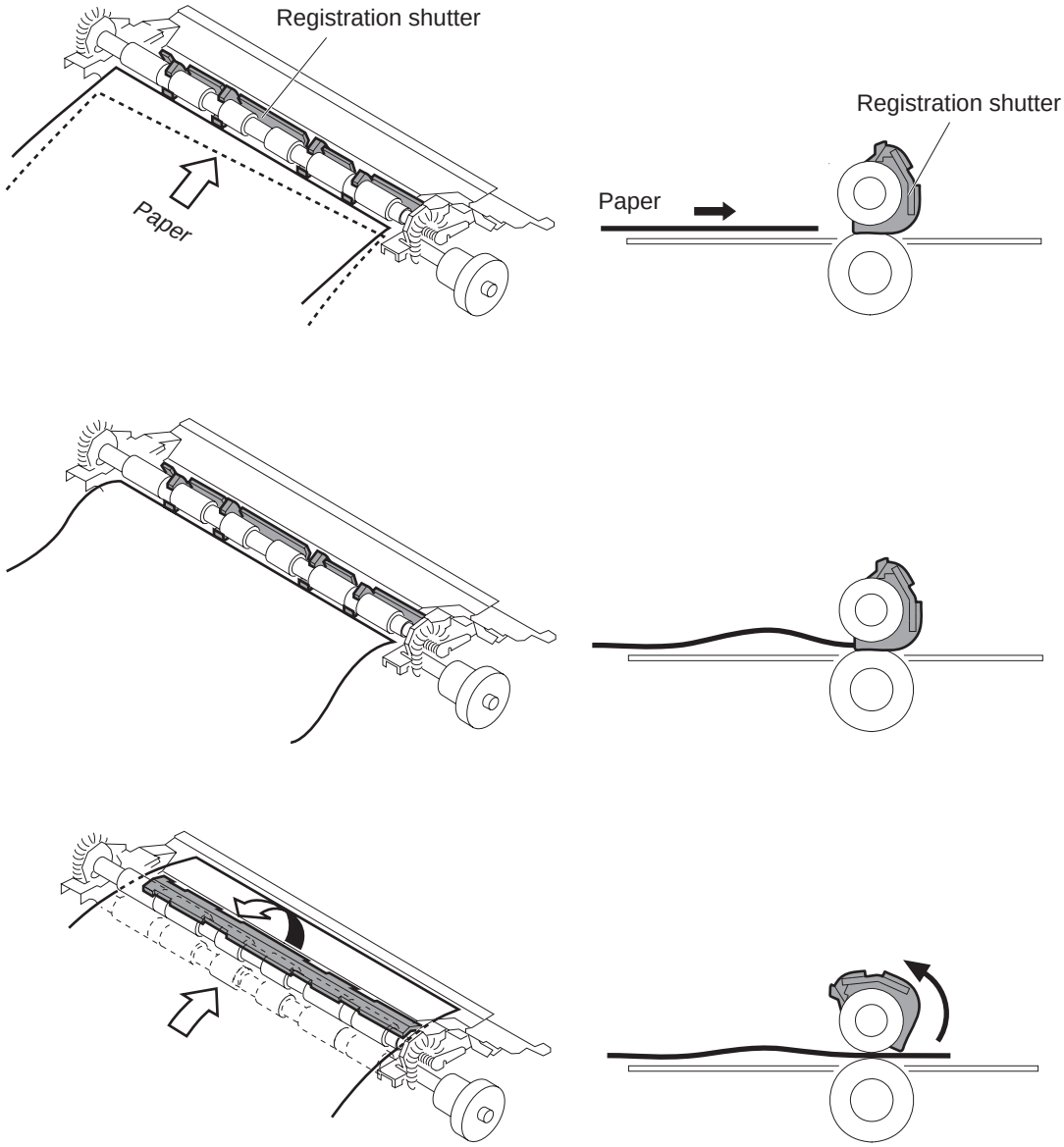

Paper detection

The product detects the type of paper by monitoring the media sensor. The media sensor detects the glossiness of paper by the reflected light and the thickness of paper by transmitted light. The DC controller identifies the type of paper (for example, plain paper, light paper, heavy paper, glossy paper,

glossy film, or overhead transparency) and switches to the correct print mode. The DC controller determines a media mismatch error and notifies the formatter under the following condition:

Simplex printing

- The specified print mode is overhead transparency (OHT), but the media sensor detects another paper type.
- The specified print mode is not auto or OHT, but the media sensor detects OHT.

Duplex printing

- The media sensor detects OHT.

The DC controller flashes the media sensor during the initial rotation period under the following conditions:

- The product is turned on
- The product exits Sleep mode

When the light intensity is not a specified value, the DC controller determines a media-sensor failure and notifies the formatter.

Feed speed control

For the best print quality, the product adjusts the feed speed depending on the paper type.

Table 1-14 Print mode and feed speed

Print mode	Feed speed	Media sensor detection
Normal	1/1	Yes
Heavy media 1	3/4	
Heavy media 2	1/2	Yes
Heavy media 3	1/3	Yes
Light media 1	1/1	Yes
Glossy media 1	1/3	Yes
Glossy media 2	1/3	Yes
Glossy media 3	1/4	Yes
Glossy film	1/4	Yes
Envelope	1/2	No
OHT	1/4	Yes
Label	1/2	No
Designated media 1	1/2	No

Fusing and delivery unit

The fusing and delivery unit fuses the toner onto the paper and delivers the printed page into the output bin. The following controls ensure optimum print quality:

The face-down tray media full sensor on the output bin detects whether the tray is full of printed pages. The DC controller notifies the formatter when the sensor is on for a specified time.

Figure 1-40 Fuser and delivery unit

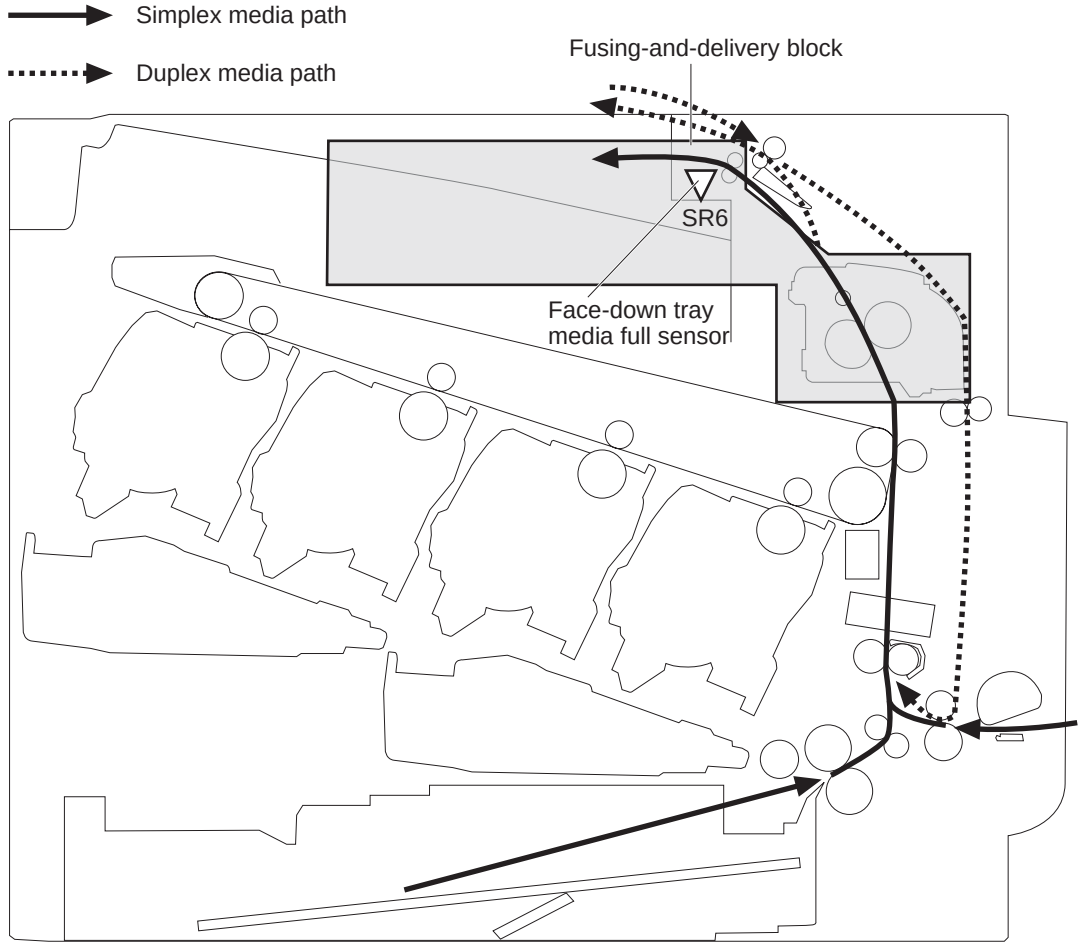

Loop control

The loop control stabilizes the paper feed operation before the paper enters the fuser. If the pressure roller rotate slower than the secondary transfer roller, the paper loop increases and an image defect or paper crease occurs. If the pressure roller rotate faster than the secondary transfer roller, the paper loop decreases and a vertical scanning magnification failure occurs because the pressure roller pulls the paper.

To prevent these problems, loop sensor 1 and loop sensor 2 detect the paper loop before the paper enters the fuser. The DC controller adjusts the rotational speed of the fuser motor according to the output signals from the loop sensors and maintains the paper loop. Loop sensor 1 is for light media, and loop

sensor 2 is for heavy media. The DC controller slows the fuser motor when the sensor is off and speeds up the sensor when the sensor is on.

Figure 1-41 Loop-control mechanism

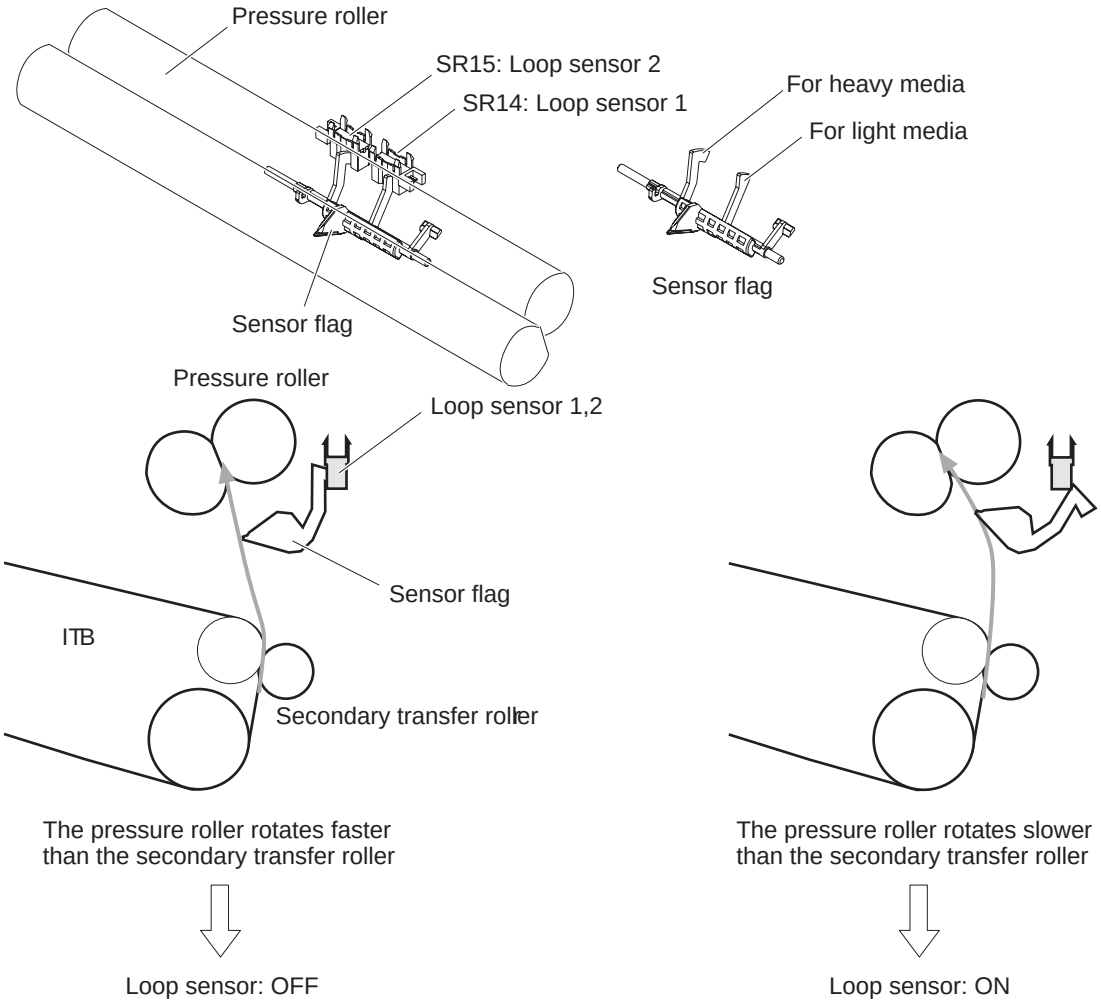

Pressure-roller pressurization control

To prevent excessive wear on the pressure roller and help with jam-clearing procedures, the pressure roller pressurizes only during printing and standby. The DC controller reverses the fuser motor. The fuser motor rotates the fuser pressure-release cam.

Figure 1-42 Pressure-roller pressurization control

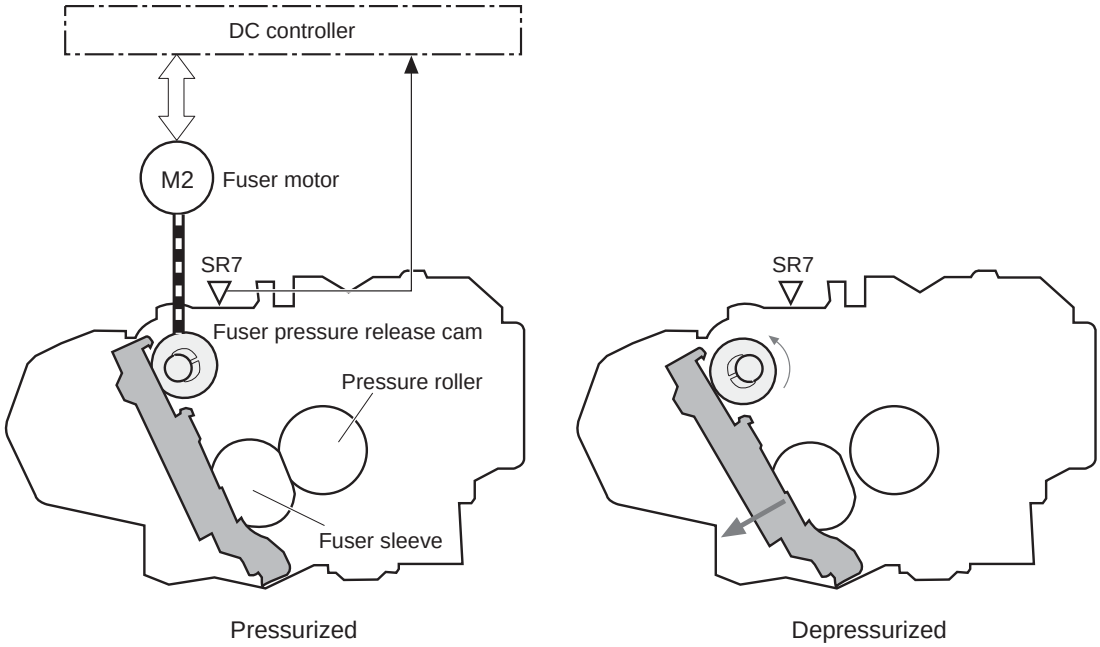

The pressure roller depressurizes under the following conditions:

- The product is turned off
- Any failure occurs
- During powersave mode
- When a paper jam is detected

If the DC controller does not sense the fuser pressure-release sensor for a specified period after it reverses the fuser motor, it notifies the formatter that a fuser pressure-release mechanism failure has occurred.

Duplexing unit (HP Color LaserJet CP4525dn, HP Color LaserJet CP4025dn, and HP Color LaserJet CP4525xh only)

For supported models, the duplexing unit reverses the paper and feeds it through the paper path to print the second side.

Figure 1-43 Duplexing unit

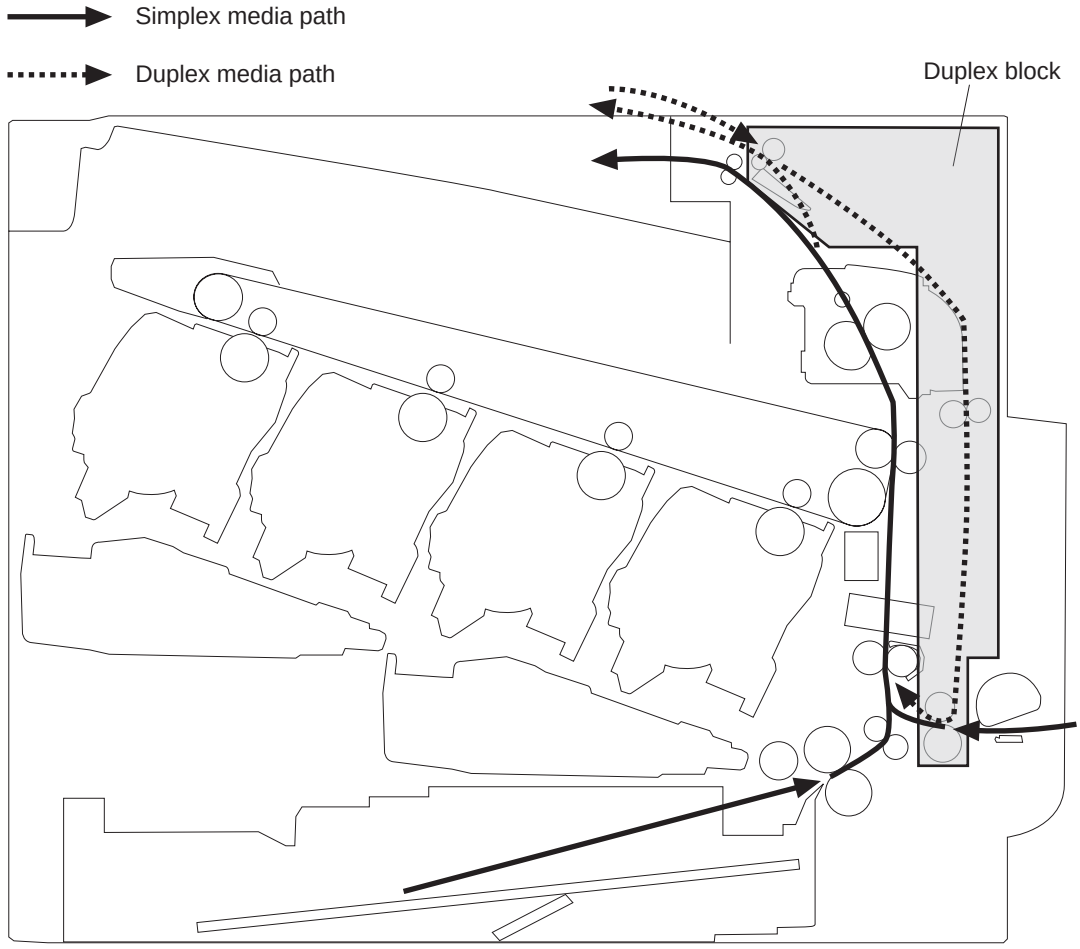

Duplexing reverse and feed control

The duplex reverse control reverses the paper after the first side is printed and feeds it to the duplex re-pickup position to print the second side of the page.

1. At a specified time after the first side of a page is printed, the duplex reverse motor rotates, and the duplex reverse solenoid is turned on.
2. The duplex flapper moves, and the paper is fed to the duplex reverse unit.
3. After a specified period of time, the duplex reverse motor is reversed, and the paper is fed to the duplex feed unit.
4. The duplex reverse motor and the pickup motor move the paper to the duplex re-pickup position.

5. The duplex reverse motor and the duplex feed clutch stop, and the paper feed operation pauses.

6. After a specified period of time, the duplex reverse motor rotates, and the duplex feed clutch is turned on. The paper is then picked up again.

Figure 1-44 Duplex reverse and feed control

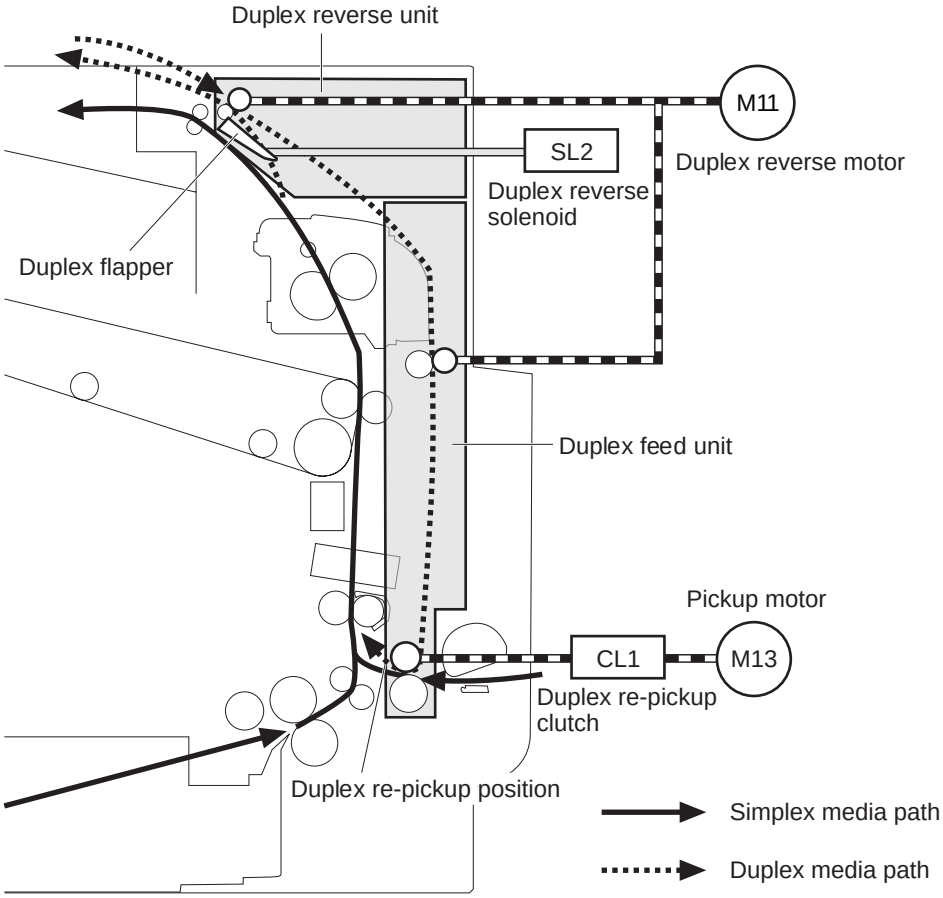

Duplex print operation

The product has the following two duplex-media-feed modes depending on the paper sizes:

- One-sheet mode: Prints one sheet that is printed on two sides in one duplex print operation
- Two-sheet mode: Prints two sheets that are printed on two-sides in one duplex print operation

Table 1-15 Paper sizes

Paper size	Duplex media feed mode
A4	One-sheet operation
Letter	Two-sheet operation
B5	
Executive	
Legal	One-sheet operation

The formatter specifies the duplex-media-feed mode for each two-sided print job. Duplex printable media size (A4, Letter, B5, Legal and Executive) and designated print mode (Auto, Normal, Heavy media 1, Heavy media 2 (120 g/m2 or lighter), Glossy media 1, Glossy media 2, Glossy media 3, Glossy film, Designated media 1, and Designated media 2) must be specified.

Jam detection

The product uses the following sensors to detect the paper as it moves through the paper path and to report to the DC controller if the paper has jammed.

- Fuser delivery sensor (SR5)
- TOP (top of page) sensor (SR20)
- Loop sensor 1 (SR14)
- Loop sensor 2 (SR15)
- Duplex re-pickup sensor (SR22)

Figure 1-45 Jam detection sensors

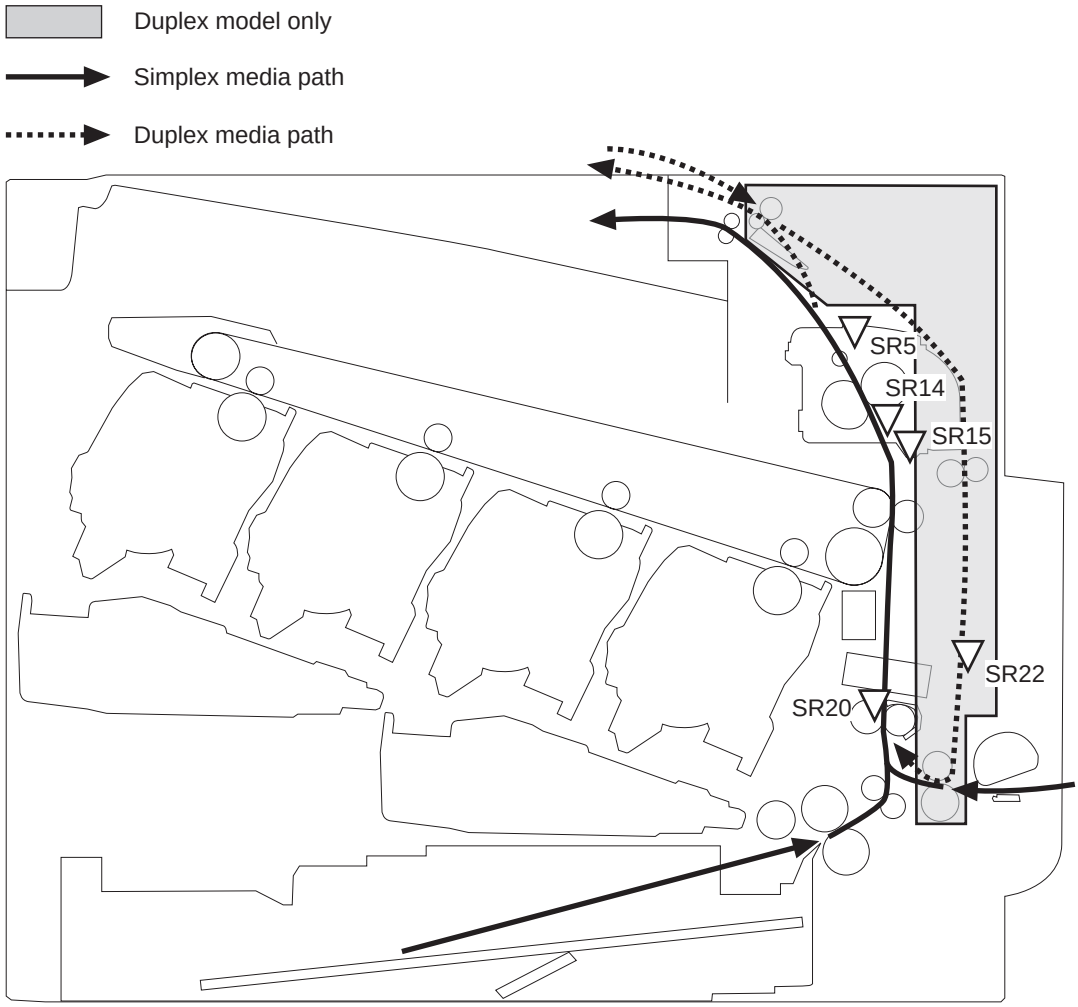

The product determines that a jam has occurred if one of these sensors detects paper at an inappropriate time. The DC controller stops the print operation and notifies the formatter.

Table 1-16 Jams that the product detects

Jam	Description
Pickup delay jam	The TOP sensor does not detect the leading edge of the paper within a specified time (including two retries) after the pickup operation from the cassette, multipurpose tray, or optional paper feeder starts.
Pickup stationary jam	The TOP sensor does not detect the trailing edge of the paper within a specified time from when it detects the leading edge.
Fuser delivery delay jam	The fuser delivery sensor does not detect the leading edge of the paper within a specified period after the TOP sensor detects the leading edge.
Fuser delivery stationary jam	The fuser delivery sensor does not detect the trailing edge of the paper within a specified period after it detects the leading edge.
Wrapping jam	After detecting the leading edge of the paper, the fuser delivery sensor detects the absence of paper, and it has not yet detected the trailing edge.
Residual paper jam	One of the following sensors detects paper presence during the initialization sequence: • Fuser delivery sensor • Loop sensor 1 • Loop sensor 2 One of the following sensors detects paper presence during the an automatic delivery operation: • Fuser delivery sensor • TOP sensor • Loop sensor 1 • Loop sensor 2 • Duplex re-pickup sensor
Door open jam	A door is open while paper is moving through the product.
Duplexing re-pickup jam 1	The duplex re-pickup sensor does not detect the leading edge of the paper within a specified period after the media reverse operation starts in the duplex reverse unit.
Duplexing re-pickup jam 2	The TOP sensor does not detect the leading edge of the paper within a specified period after the paper is re-picked.

Automatic delivery: The product automatically clears paper if the TOP sensor detects residual paper during initialization.

Optional paper feeder

The 1 x 500-sheet paper feeder is optionally installed at bottom of the product. The paper feeder picks up the print media and feeds it to the product. There are two types of paper feeders: 1 x 500-sheet paper feeder and 3 x 500-sheet paper feeder. The operational sequence of the paper feeders is controlled by the paper feeder controller.

Figure 1-46 1 x 500 optional paper feeder

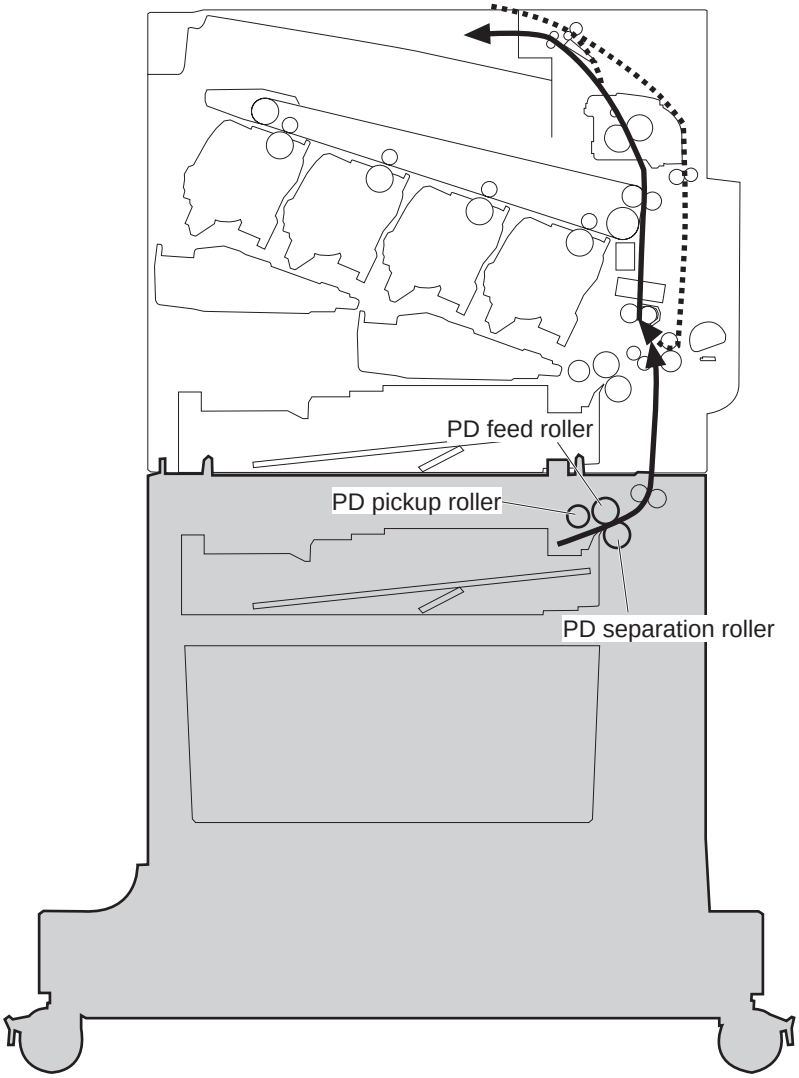

Figure 1-47 3 x 500-sheet optional paper feeder

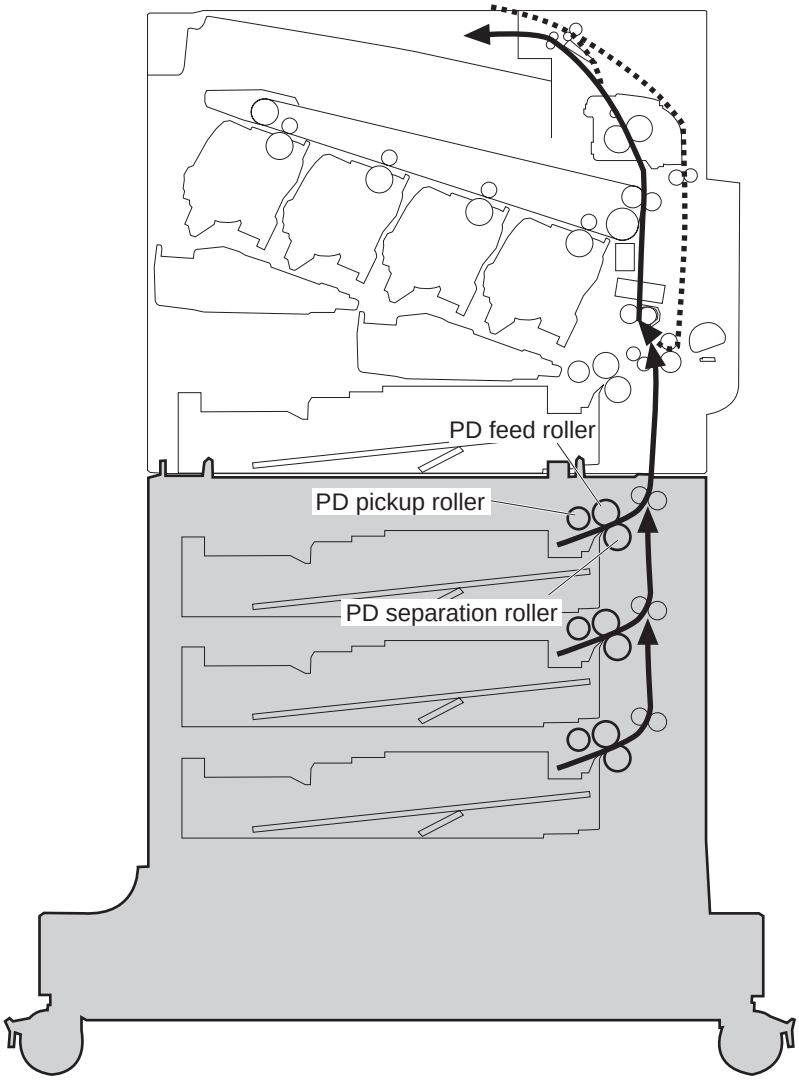

Figure 1-48 Signals for the paper feeder

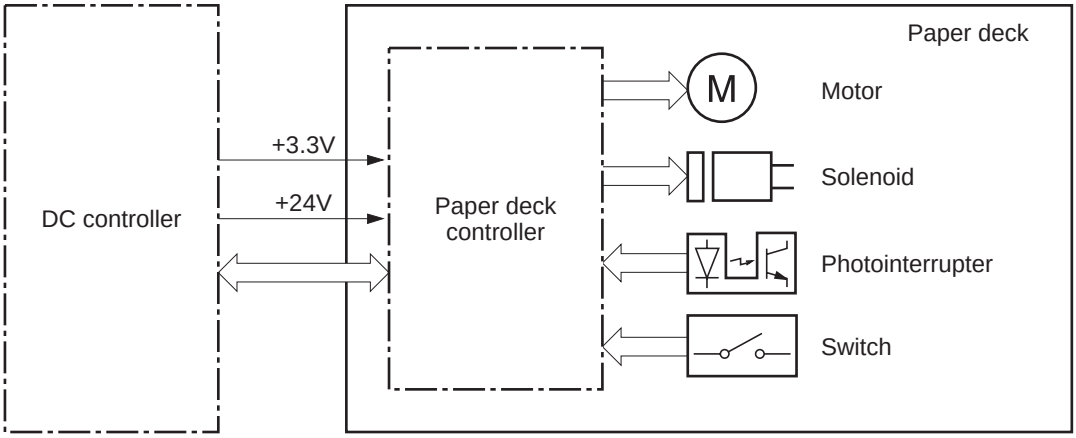

The input trays contain several motors, solenoids, sensors, and switches, as described in the following table.

Table 1-17 Electrical components for the paper feeder

Component type	Abbreviation	Component name
Motors	M1	PD lifter motor 1
	M2	PD pickup motor
	M3	PD lifter motor 2 (3 x 500-sheet paper feeder only)
	M4	PD lifter motor 3 (3 x 500-sheet paper feeder only)
Solenoids	SL1	PD pickup solenoid 1
	SL2	PD pickup solenoid 2 (3 x 500-sheet paper feeder only)
	SL3	PD pickup solenoid 3 (3 x 500-sheet paper feeder only)
Sensors	SR1	Tray 3 paper surface sensor 1
	SR2	Tray 3 paper surface sensor 2
	SR3	Tray 3 paper present presence sensor
	SR4	Tray 3 feed sensor
	SR5	Tray 4 paper surface sensor 1 (3 x 500-sheet paper feeder only)
	SR6	Tray 4 paper present sensor (3 x 500-sheet paper feeder only)
	SR7	Tray 4 feed sensor (3 x 500-sheet paper feeder only)
	SR8	Tray 4 paper surface sensor 2 (3 x 500-sheet paper feeder only)
	SR9	Tray 5 paper surface sensor 1 (3 x 500-sheet paper feeder only)
	SR10	Tray 5 feed sensor (3 x 500-sheet paper feeder only)
	SR11	Tray 5 paper present sensor (3 x 500-sheet paper feeder only)
	SR12	Tray 5 paper surface sensor 2 (3 x 500-sheet paper feeder only)
Switches	SW1	PD right door switch
	SW2	PD media size switch 1 (3 x 500-sheet paper feeder only)
	SW3	PD media size switch 2 (3 x 500-sheet paper feeder only)
	SW4	PD media size switch 3 (3 x 500-sheet paper feeder only)

Motor control

The 1 x 500-sheet paper feeder has two motors, and the 3 x 500-sheet paper feeder has four motors for feeding paper.

Component		Drives	Failure detection
PD lifter motor 1	M1	Lifter of the upper cassette	No
PD lifter motor 2 (3 x 500-sheet paper feeder only)	M3	Lifter of the middle cassette	No

Component		Drives	Failure detection
PD lifter motor 3 (3 x 500-sheet paper feeder only)	M4	Lifter of the lower cassette	No
PD pickup motor	M2	PD pickup roller, PD feed roller, and PD separation roller	No

Paper-feeder pickup and feed operation

The paper feeder picks up one sheet from the paper-feeder cassette and feeds it to the product.

Figure 1-49 Paper-feeder pickup and feed operation

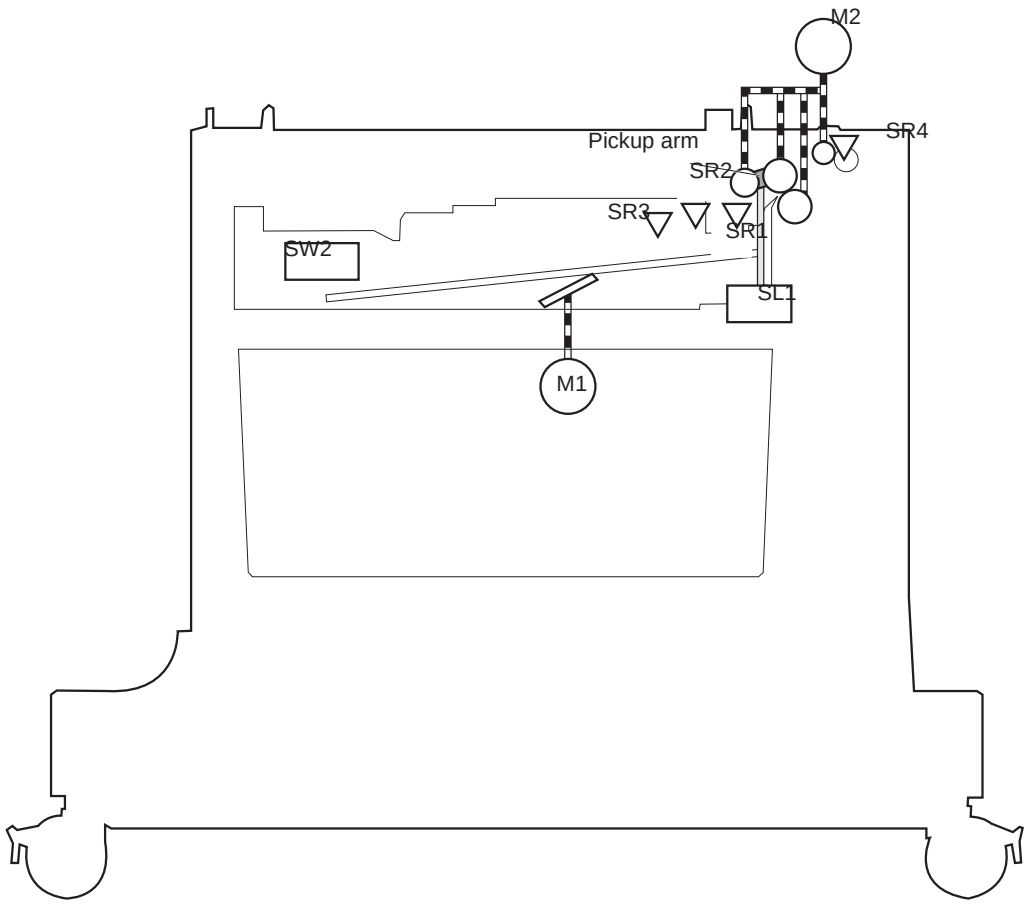

Table 1-18 Pickup feed components (1 x 500-sheet paper feeder)

Component	
M1	PD lifter motor 1
M2	PD pickup motor
SL1	PD pickup solenoid 1
SR1	Tray 3 paper surface sensor 1
SR2	Tray 3 paper surface sensor 2

Table 1-18 Pickup feed components (1 x 500-sheet paper feeder) (continued)

Component	
SR3	Tray 3 paper presence sensor
SR4	Tray 3 paper present sensor
SW2	Tray 3 paper size switches

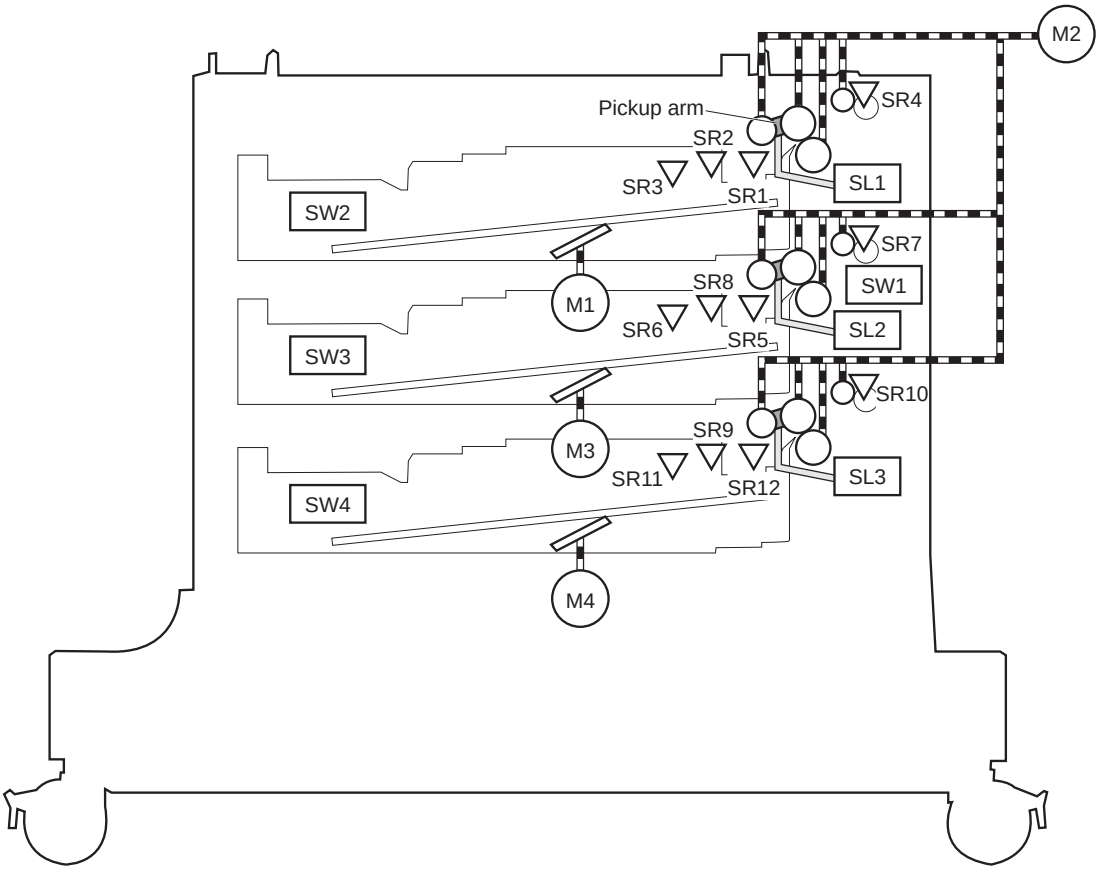

Components	
M1	PD lifter motor 1
M2	PD pickup motor
M3	PD lifter motor 2 (3 x 500-sheet paper feeder only)
M4	PD lifter motor 3 (3 x 500-sheet paper feeder only)
SL1	PD pickup solenoid 1
SL2	PD pickup solenoid 2
SL3	PD pickup solenoid 3
SR1	Tray 3 paper surface sensor 1
SR2	Tray 3 paper surface sensor 2
SR3	Tray 3 paper presence sensor
SR4	Tray 3 paper presence sensor

SR5	Tray 4 paper surface sensor 1 (3 x 500-sheet paper feeder only)
SR6	Tray 4 paper surface sensor 2 (3 x 500-sheet paper feeder only)
SR7	Tray 4 feed sensor (3 x 500-sheet paper feeder only)
SR8	Tray 4 media-stack-surface sensor (3 x 500-sheet paper feeder only)
SR9	Tray 5 paper surface sensor 1 (3 x 500-sheet paper feeder only)
SR10	Tray 5 feed sensor (3 x 500-sheet paper feeder only)
SR11	Tray 5 paper present sensor (3 x 500-sheet paper feeder only)
SR12	Tray 5 media-stack-surface sensor (3 x 500-sheet paper feeder only)
SW1	Tray 3, 4, and 5 right door switch
SW2	Tray 3 paper size switches (3 x 500-sheet paper feeder only)
SW3	Tray 4 paper size switches (3 x 500-sheet paper feeder only)
SW4	Tray 5 paper size switches (3 x 500-sheet paper feeder only)

Paper-size detection and cassette-presence detection

The paper feeder detects the size of paper loaded in the paper feeder and the presence of the cassette using the PD media size switch.

Paper size	**Paper-feeder cassette media-size switch settings**		
	Top switch	**Center switch**	**Bottom switch**
Universal	**ON**	**ON**	**ON**
A5	**OFF**	**OFF**	**ON**
B5	**OFF**	**ON**	**ON**
Executive	**ON**	**OFF**	**ON**
Letter	**OFF**	**ON**	**OFF**
A4	**ON**	**OFF**	**OFF**
Legal	**ON**	**ON**	**OFF**
No cassette	**OFF**	**OFF**	**OFF**

Paper-feeder cassette lift operation

The paper feeder keeps the paper stack surface at the correct pickup position. The cassette lift operation occurs under the following conditions:

- The product is turned on.
- The cassette is inserted.
- The paper stack surface of the cassette lowers.

The sequence occurs as follows:

1. The PD lifter motor rotates and the lifter moves up.
2. When the tray media-stack-surface sensor detects the stack surface of the paper, the PD lifter motor stops.
3. The PD lifter motor rotates again to lift the lifter when the PD cassette media-stack-surface sensor detects the stack surface, and then lowers during printing.

If a tray media-stack-surface sensor does not detect a stack surface within a specified period after the PD lifter motor starts rotating, the paper feeder driver determines that the PD lifter motor has failed and through the DC controller notifies the formatter.

Figure 1-50 Paper-feeder cassette lift

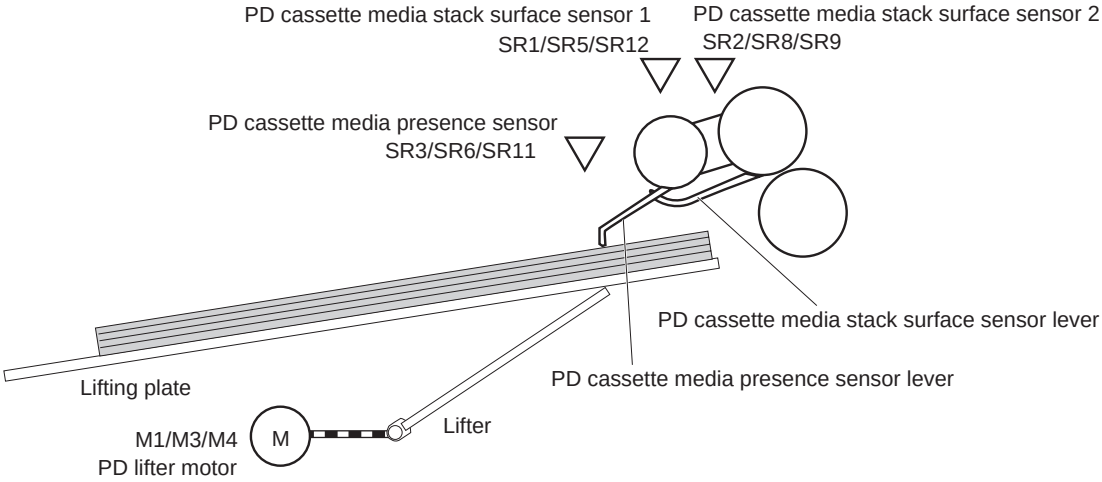

The paper-feeder driver notifies the formatter if either of the paper-feeder media-stack surface sensors fails to detect the stack surface within a specified period from when a lift-up operation starts.

Paper feeder jam detection

The 1 x 500-sheet paper feeder uses the tray 3 paper presence sensor (SR4) to detect the presence of paper and to check whether paper has jammed.

Figure 1-51 Jam detection (1 x 500-sheet paper feeder)

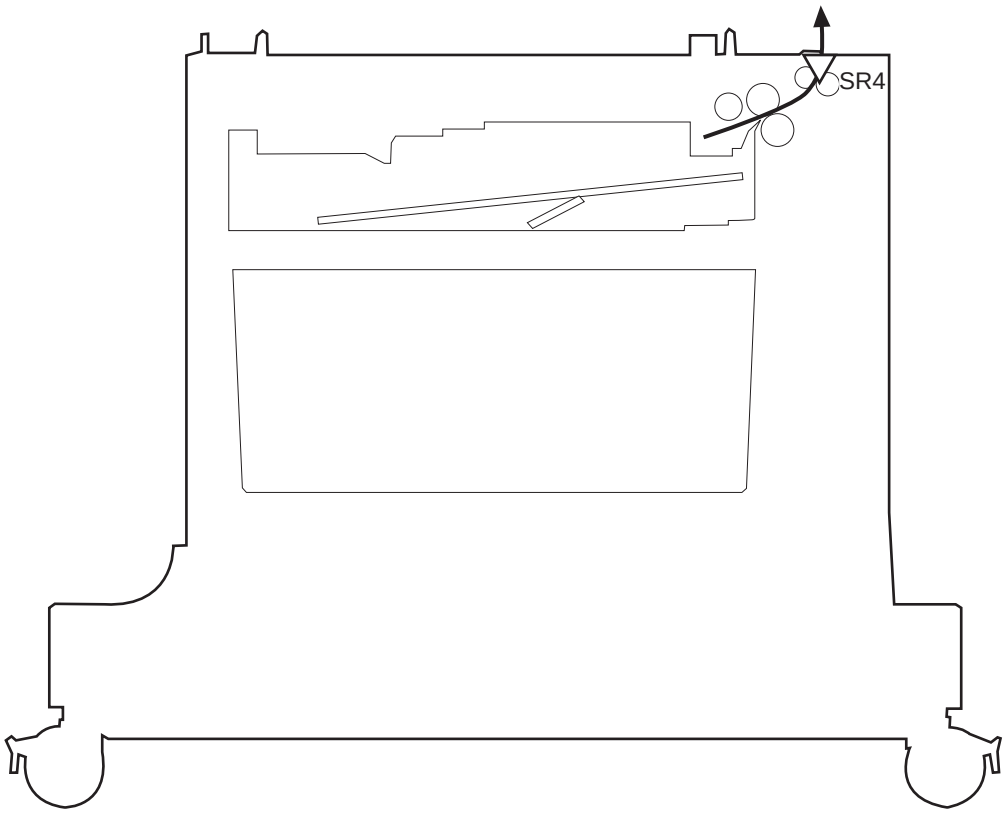

The 1 x 500-sheet paper feeder detects the following jams:

- 1 x 500-sheet PD pickup delay jam: Tray 3 feed sensor does not detect the leading edge of paper within a specified time (including two retries) after the pickup operation starts.
- 1 x 500-sheet PD pickup stationary jam: Tray 3 feed sensor does not detect the trailing edge of paper within a specified time after the sensor detects the leading edge.
- 1 x 500-sheet PD residual paper jam: Tray 3 feed sensor detects the presence of paper for a specified time during an automatic delivery operation.

The 3 x 500-sheet paper feeder uses the following sensors to detect the presence of paper and to check whether paper has jammed.

- Tray 3 paper presence sensor (SR4)
- Tray 4 feed sensor (SR7)
- Tray 5 feed sensor (SR10)

Figure 1-52 Jam detection (3 x 500-sheet paper feeder)

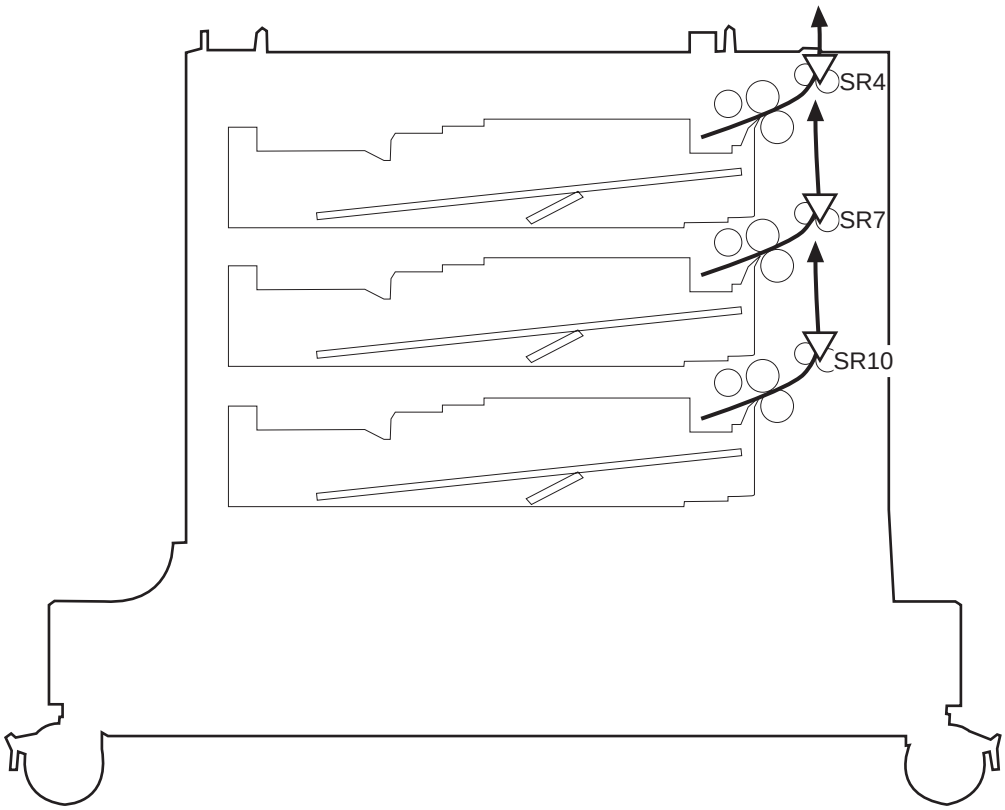

The 3 x 500-sheet paper feeder detects the following jams:

- 3 x 500-sheet PD pickup delay jam: One of the tray feed sensors does not detect the leading edge of paper within a specified time (including two retries) after the pickup operation starts.
- 3 x 500-sheet PD pickup delay jam 2: Tray 3 feed sensor does not detect the leading edge of paper within a specified time (including two retries) after the pickup operation starts.
- 3 x 500-sheet PD pickup stationary jam 1: Tray 4 or 5 feed sensors do not detect the trailing edge of paper within a specified time after the sensor detects the leading edge.
- 3 x 500-sheet PD pickup stationary jam 2: Tray 3 feed sensor does not detect the trailing edge of paper within a specified time after the sensor detects the leading edge.
- 3 x 500-sheet PD residual paper jam: Tray 3, 4, or 5 feed sensors detect the presence of paper for a specified time during an automatic delivery operation.
- 3 x 500-sheet PD door open jam: The door is open during paper feed operation.

2 Removal and replacement

- Introduction
- Removal and replacement strategy
- Electrostatic discharge
- Required tools
- Before performing service
- After performing service
- Post-service test
- Parts removal order
- Customer self repair (CSR) components
- External panels, covers, and doors
- Internal assemblies
- Optional paper feeder assemblies (1 x 500-sheet and 3 x 500-sheet)

Introduction

This chapter describes the removal and replacement of field-replaceable units (FRUs) only.

Replacing FRUs is generally the reverse of removal. Occasionally, notes and tips are included to provide directions for difficult or critical replacement procedures.

HP does *not* support repairing individual subassemblies or troubleshooting to the component level.

Note the length, diameter, color, type, and location of each screw. Be sure to return each screw to its original location during reassembly.

Incorrectly routed or loose wire harnesses can interfere with other internal components and can become damaged or broken. Frayed or pinched harness wires can be difficult to find. When replacing wire harnesses, always use the provided wire loops, lance points, or wire-harness guides and retainers.

Removal and replacement strategy

WARNING! Turn the product off, wait 5 seconds, and then remove the power cord before attempting to service the product. If this warning is not followed, severe injury can result, in addition to damage to the product. The power must be on for certain functional checks during troubleshooting. However, disconnect the power supply during parts removal.

Never operate or service the product with the protective cover removed from the laser/scanner assembly. The reflected beam, although invisible, can damage your eyes.

The sheet-metal parts can have sharp edges. Be careful when handling sheet-metal parts.

CAUTION: Do not bend or fold the flat flexible cables (FFCs) during removal or installation. Also, do not straighten pre-folds in the FFCs. You *must* fully seat all FFCs in their connectors. Failure to fully seat an FFC into a connector can cause a short circuit in a PCA.

NOTE: To install a self-tapping screw, first turn it counterclockwise to align it with the existing thread pattern, and then carefully turn it clockwise to tighten. Do not overtighten. If a self-tapping screw-hole becomes stripped, repair the screw-hole or replace the affected assembly.

TIP: For clarity, some photos in this chapter show components removed that would not be removed to service the product. If necessary, remove the components listed at the beginning of a procedure before proceeding to service the product.

Electrostatic discharge

△ **CAUTION:** Some parts are sensitive to electrostatic discharge (ESD). Look for the ESD reminder when removing product parts. Always perform service work at an ESD-protected workstation or mat, or use an ESD strap. If an ESD workstation, mat, or strap is not available, ground yourself by touching the sheet-metal chassis *before* touching an ESD-sensitive part.

Protect the ESD-sensitive parts by placing them in ESD pouches when they are out of the product.

Required tools

- #2 Phillips screwdriver with a magnetic tip and a 152-mm (6-inch) shaft length
- Small flat blade screwdriver
- Needle-nose pliers
- ESD mat or ESD strap (if one is available)
- Penlight (optional)

△ **CAUTION:** Always use a Phillips screwdriver (callout 1). Do not use a pozidrive screwdriver (callout 2) or any motorized screwdriver. These can damage screws or screw threads.

Figure 2-1 Phillips and pozidrive screwdriver comparison

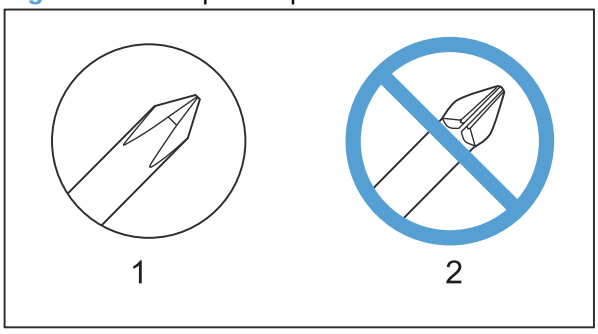

Before performing service

- Remove all media from the product.
- Turn off the power using the power switch.
- Unplug the power cable and interface cable or cables.
- Place the product on an ESD workstation or mat, or use an ESD strap (if one is available). If an ESD workstation, mat, or strap is not available, ground yourself by touching the sheet-metal chassis *before* touching an ESD-sensitive part.
- Remove the print cartridges. See Print cartridges on page 74.
- Remove the tray cassette or cassettes. See Tray on page 84.
- If the optional paper feeder is installed, separate the product from the feeder.

⚠ **WARNING!** The product is heavy. Do not try to separate the product from the optional paper feeder by yourself. Three people are required to lift the product off of the feeder.

After performing service

- Plug in the power cable.
- Reinstall the print cartridges.
- Reinstall the tray cassette or cassettes.
- If the optional paper feeder was installed, place the product on the feeder.

⚠ **WARNING!** The product is heavy. Do not try to separate the product from the optional paper feeder by yourself. Three people are required to lift the product off of the feeder.

Post-service test

Perform the following test to verify that the repair or replacement was successful.

Print-quality test

1. Verify that you have completed the necessary reassembly steps.
2. Make sure that the tray contains clean, unmarked paper.
3. Attach the power cord and interface cable or interface cables, and then turn on the product.
4. Verify that the expected startup sounds occur.
5. Print a configuration page, and then verify that the expected printing sounds occur.
6. Print a demo page, and then verify that the print quality is as expected.
7. Send a print job from the host computer, and then verify that the output meets expectations.
8. If necessary, restore any customer-specified settings.
9. Clean the outside of the product with a damp cloth.

Parts removal order

Figure 2-2 Parts removal order (1 of 2)

Component	Remove	Remove	Remove	Remove	Remove	Remove
Print cartridges						
Toner collection unit (TCU)						
Formatter						
Memory DIMMS						
Fuser						
Tray 1 pickup roller	Roller cover					
Tray 2-5 feed and separation rollers						
Transfer roller						
Front-door assy	Upper-left cover	Front-top cover	Rear-top cover	Right-front cover		
Right-door assy						
Right-rear cover	Upper-left cover	Front-top cover	Rear-top cover			
Upper-left cover						
Power-supply cover						
Left cover	Upper-left cover	Power-supply cover				
Front-top cover	Upper-left cover					
Rear-top cover	Upper-left cover	Front-top cover				
Right-front cover	Upper-left cover	Front-top cover	Rear-top cover			
Rear cover	Upper-left cover	Power-supply cover	Front-top cover	Rear-top cover		
Control panel	Upper-left cover	Front-top cover	Rear-top cover	Right-front cover		
Secondary transfer assy (T2)						
Intermediate transfer belt (ITB)						
Registration density (RD) sensor	ITB	Secondary transfer assembly				
Registration assembly	ITB	Secondary transfer assembly	Cassette guide assembly			
Residual-toner duct assembly	Toner collection unit (TCU)	ITB	Upper-left cover	Residual-toner feed motor		
Residual-toner feed motor	ITB	Upper-left cover				
Cartridge fan and environmental sensor	Upper-left cover	Power-supply cover	Left cover			
Toner-collection sensor	Toner collection unit (TCU)	Upper-left cover	Power-supply cover	Left cover		
Delivery fan	Upper-left cover	Front-top cover	Rear-top cover			
Delivery assembly	Fuser	ITB	Upper-left cover	Power-supply cover	Front-top cover	Rear-top cover
Duplex-drive assy	Fuser	ITB	Upper-left cover	Power-supply cover	Front-top cover	Rear-top cover
Power-supply (PS) fan	Upper-left cover	Power-supply cover	Front-top cover	Rear-top cover	Rear cover	Right-rear cover
Interconnect board (ICB)	Formatter	Upper-left cover	Power-supply cover	Front-top cover	Rear-top cover	Rear cover
DC controller (DCC) assembly	Upper-left cover	Power-supply cover	Front-top cover	Rear-top cover	Rear cover	ICB
Low-voltage power supply (LVPS)	Formatter	Upper-left cover	Power-supply cover	Left cover	Front-top cover	Rear-top cover
High-voltage power supply (HVPS)-lower	Formatter	Upper-left cover	Power-supply cover	Left cover	Front-top cover	Rear-top cover
High-voltage power supply (HVPS)-upper	Formatter	Upper-left cover	Power-supply cover	Left cover	Front-top cover	Rear-top cover
Developing-disengagement motor	Formatter	Upper-left cover	Power-supply cover	Left cover	Front-top cover	Rear-top cover
Exhaust fan and fan duct	Formatter	Upper-left cover	Power-supply cover	Left cover	Front-top cover	Rear-top cover
Pickup motor	Formatter	Upper-left cover	Power-supply cover	Left cover	Front-top cover	Rear-top cover
Lifter-drive assy	Formatter	ITB	Upper-left cover	Power-supply cover	Left cover	Front-top cover
Lifter base assembly	Formatter	Upper-left cover	Power-supply cover	Left cover	Front-top cover	Rear-top cover
Tray-pickup drive assy	Formatter	Upper-left cover	Power-supply cover	Left cover	Front-top cover	Rear-top cover
Tray-pickup assy	Formatter	ITB	Upper-left cover	Power-supply cover	Left cover	Front-top cover
Laser scanner (Y/M)	TCU	Formatter	ITB	Upper-left cover	Power-supply cover	Left cover
Laser Scanner (C/Bk)	TCU	Formatter	ITB	Upper-left cover	Power-supply cover	Left cover
Drum motors	Upper-left cover	Power-supply cover	Left cover	Front-top cover	Rear-top cover	Rear cover
Fuser motor	Formatter	Upper-left cover	Power-supply cover	Left cover	Front-top cover	Rear-top cover
ITB motor	Upper-left cover	Power-supply cover	Left cover	Front-top cover	Rear-top cover	Rear cover
Main-drive assy	Formatter	ITB	Upper-left cover	Power-supply cover	Left cover	Front-top cover
Fuser-drive assy	Formatter	ITB	Upper-left cover	Power-supply cover	Left cover	Front-top cover

Figure 2-3 Parts removal order (2 of 2)

Remove	Remove	Remove	Remove	Remove	Remove	Remove	Remove	Remove	Remove	Remove
Right-front cover	Control panel assembly	Delivery fan								
Right-front cover	Control panel assembly	Delivery fan	Delivery assy							
Rear cover	ICB									
Rear cover	ICB	LVPS								
Rear cover	ICB	LVPS	DCCA							
Rear cover	ICB	LVPS	HVPS-lower							
Rear cover	ICB	LVPS	HVPS-lower							
Rear cover	ICB	LVPS	Right-rear cover	Power-supply fan						
Rear-top cover	Rear cover	ICB	LVPS	HVPS-lower						
Rear cover	ICB	LVPS	HVPS-lower							
Rear cover	ICB	LVPS	Right-rear cover	HVPS-lower						
Rear-top cover	Rear cover	Right-rear cover	2T assembly	Registration assembly	ICB	LVPS	HVPS-lower			
Front-top cover	Rear-top cover	Rear cover	Cartridge fan	Toner collection sensor	ICB	LVPS	HVPS-lower	Exhaust fan and duct		
Front-top cover	Rear-top cover	Rear cover	Cartridge fan	Toner collection sensor	ICB	LVPS	HVPS-lower	Exhaust fan and duct	Laser scanner (Y/M)	
ICB	LVPS	DCCA	HVPS-upper							
Rear cover	ICB	LVPS	DCCA	HVPS-upper						
ICB	LVPS	DCCA	HVPS-upper							
Rear-top cover	Rear cover	Power-supply fan	ICB	LVPS	DCCA	HVPS-lower	Exhaust fan	HVPS-upper	Drum motors	
Rear-top cover	Rear cover	Power-supply fan	ICB	LVPS	DCCA	HVPS-lower	Exhaust fan	HVPS-upper	Main-drive assembly	

Customer self repair (CSR) components

Print cartridges

△ **CAUTION:** If toner gets on your clothing, wipe it off with a dry cloth and wash clothing in cold water. *Hot water sets toner into fabric*.

1. Open the front door. Make sure that the door is completely open.

Figure 2-4 Remove the print cartridge (1 of 2)

2. Grasp the print-cartridge handle and pull out to remove.

△ **CAUTION:** Do not touch the green roller. Doing so can damage the cartridge. Do not expose the cartridge to strong light. Cover the cartridge with a sheet of paper to protect it from light.

Reinstallation tip Align the print cartridge with its slot and insert the print cartridge until it clicks into place.

Figure 2-5 Remove the print cartridge (2 of 2)

Toner-collection unit

NOTE: The toner-collection unit is designed for a single use. Do not try to empty the toner-collection unit and reuse it. Doing so could cause toner to spill inside the product and result in reduced print quality. For recycling information, see the product user guide.

1. Open the front door. Make sure that the door is completely open.

   Figure 2-6 Remove the toner-collection unit (1 of 4)

2. Grasp the top of the toner-collection unit and remove it from the product.

   Reinstallation tip Insert the bottom of the replacement unit into the product first and then push the top of the unit until it clicks into place. If the toner-collection unit is installed incorrectly, the front door will not close completely.

   Figure 2-7 Remove the toner-collection unit (2 of 4)

   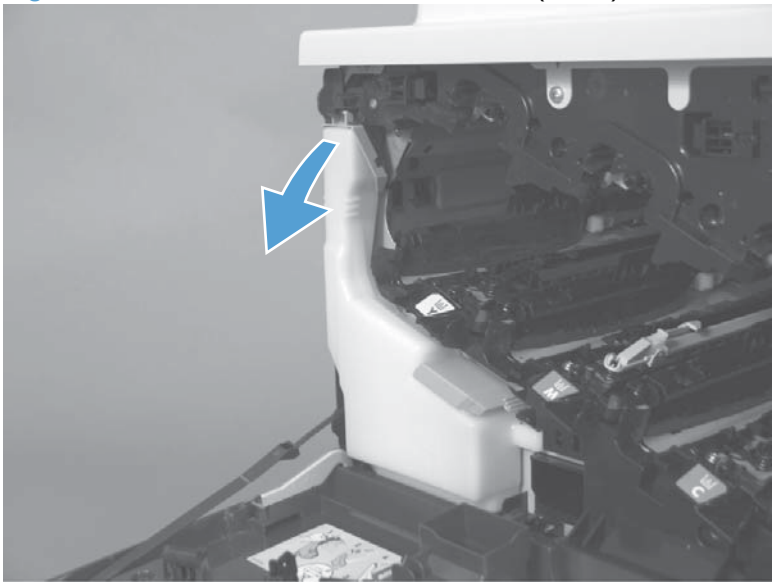

3. To prevent toner spills, place the blue cap (callout 1) over the blue opening at the top of the unit (callout 2).

Figure 2-8 Remove the toner-collection unit (3 of 4)

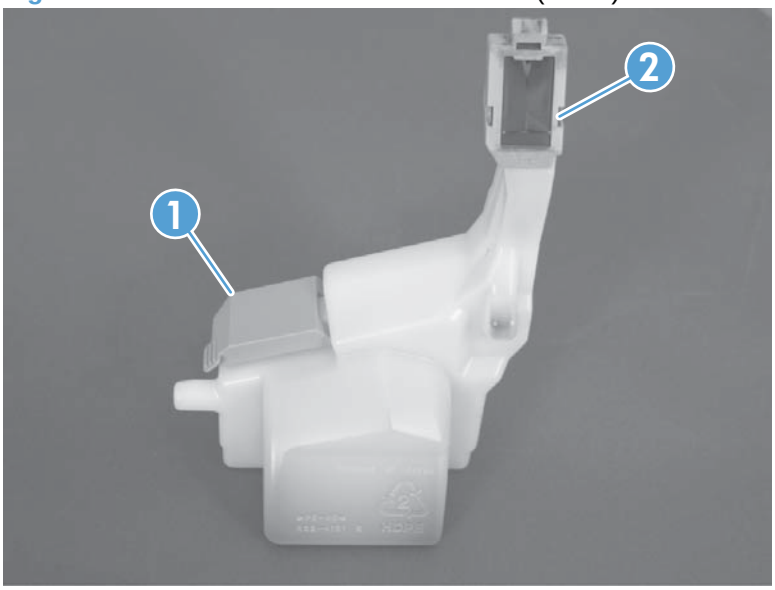

Figure 2-9 Remove the toner-collection unit (4 of 4)

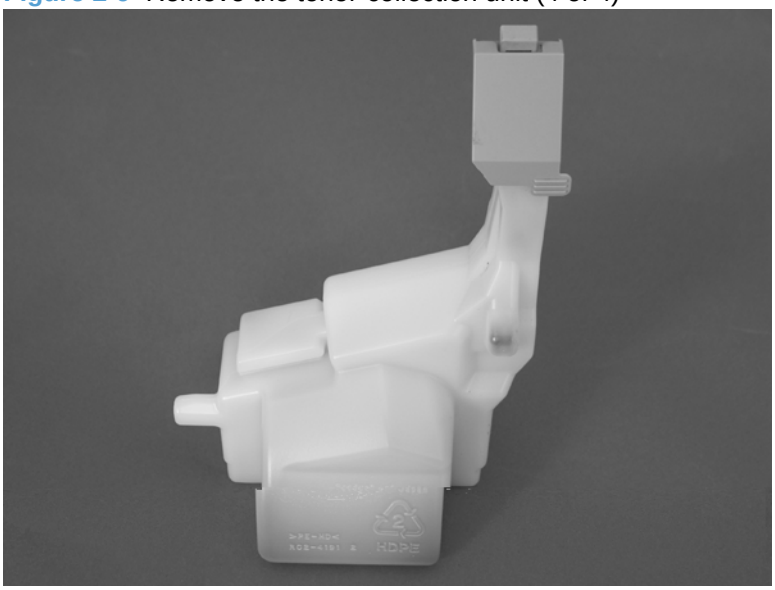

Formatter PCA

CAUTION: ESD sensitive component.

1. Turn the product off and disconnect the power and interface cable or interface cables.
2. Unscrew the formatter thumb screws, and then firmly pull the formatter from the product. Place the formatter on a clean, flat, grounded surface.

Figure 2-10 Remove the formatter

NOTE: When reinstalling the formatter, push firmly on the right side to make sure the formatter is seated.

Hard drive

Before proceeding, remove the following components:

- Formatter PCA. See Formatter PCA on page 78.

Remove the hard drive

△ **CAUTION:** ESD sensitive component.

1. Disconnect two connectors.

   Figure 2-11 Remove the hard drive (1 of 3)

   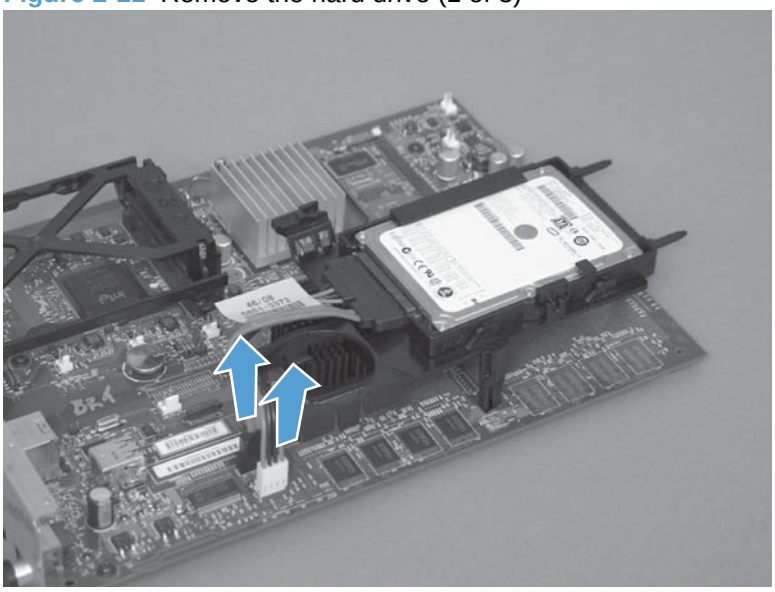

2. Release one tab.

   Figure 2-12 Remove the hard drive (2 of 3)

   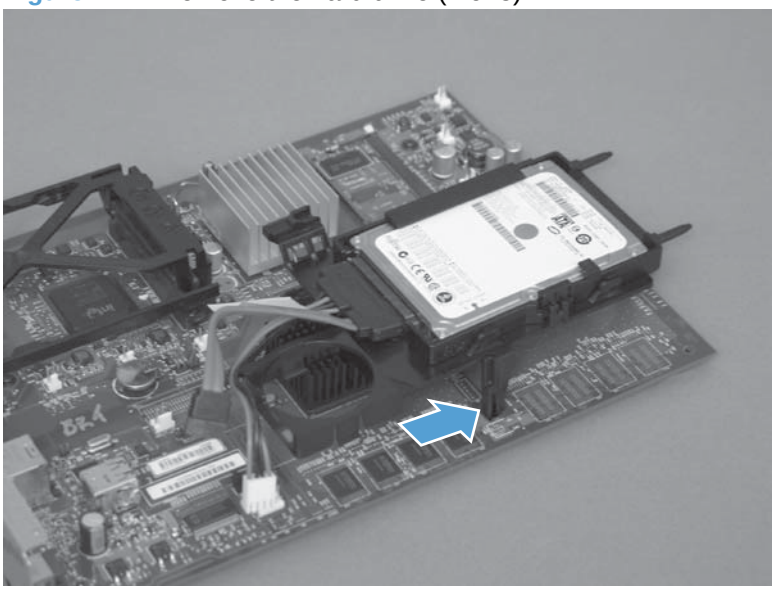

3. Rotate the hard drive assembly away from the formatter until the slots in the hinges are aligned with the elongated hinge pins, and then slide the hard drive assembly off the hinge pins.

Figure 2-13 Remove the hard drive (3 of 3)

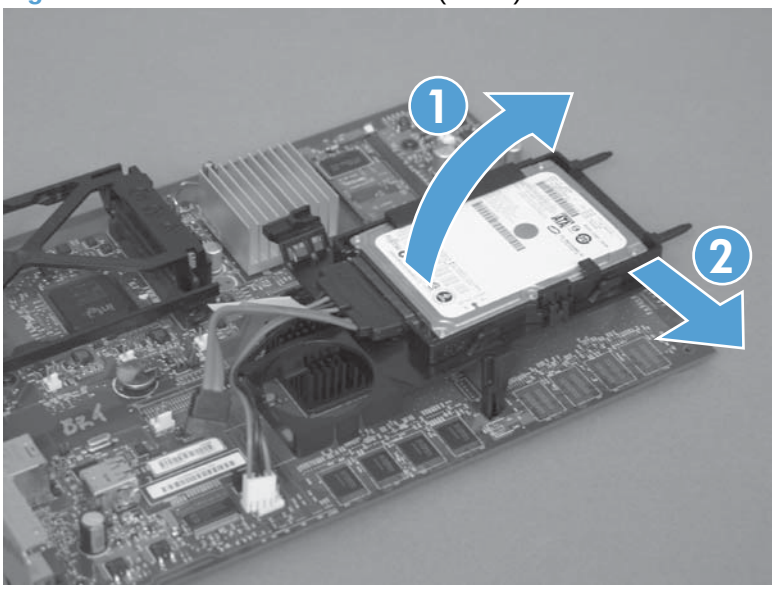

Memory DIMM

Before proceeding, remove the following components:

- Formatter PCA. See Formatter PCA on page 78.

Remove the memory DIMM

CAUTION: ESD sensitive component.

NOTE: See Enable memory on page 82 after installing a new memory DIMM.

1. Place the formatter on a clean, flat, grounded surface, and then spread the latches apart on each side of the DIMM slot.

Figure 2-14 Remove the memory DIMM (1 of 2)

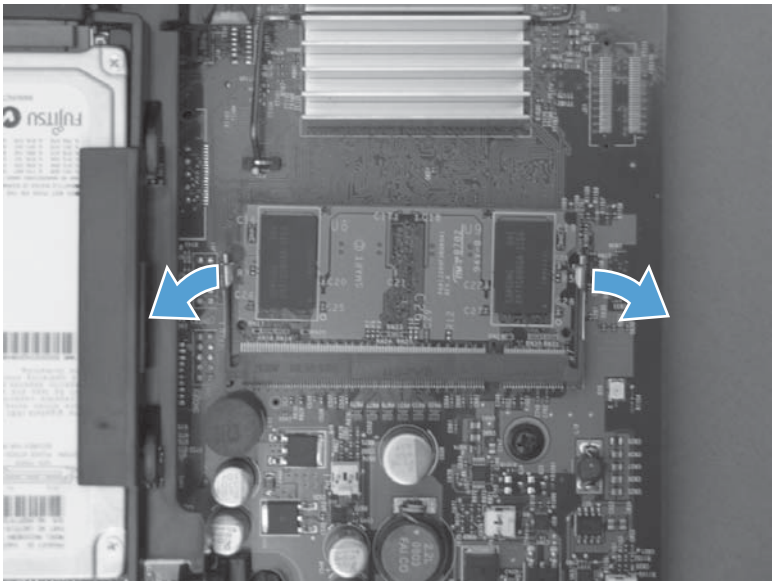

2. Lift the DIMM up at an angle, and pull it out.

Reinstallation tip Hold the DIMM by the edges. Align the notch on the DIMM with the bar in the DIMM slot at an angle and firmly press the DIMM into the slot until it is fully seated. When installed correctly, the metal contacts are not visible. Push down on the DIMM until both latches engage the DIMM.

Figure 2-15 Remove the memory DIMM (2 of 2)

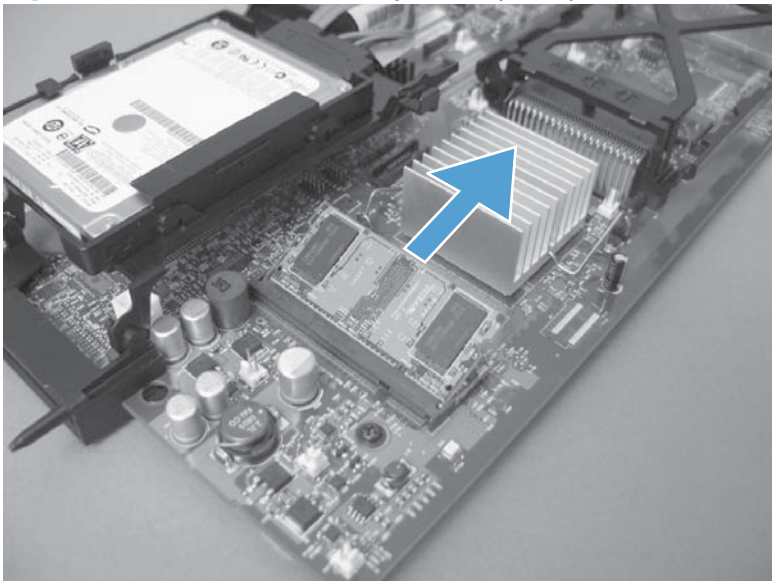

Enable memory

Windows XP, Windows Server 2003, Windows Server 2008, and Windows Vista	1. Click **Start**. 2. Click **Settings**. 3. Click **Printers and Faxes** (using the default Start menu view) or click **Printers** (using the Classic Start menu view). 4. Right-click the product driver icon, and then select **Properties**. 5. Click the **Device Settings** tab. 6. Expand the area for **Installable Options**. 7. Next to **Automatic Configuration**, select **Update Now**. 8. Click **OK**. **NOTE:** If the memory is not updated correctly after using the **Update Now** option, you can manually select the total amount of memory installed in the product in the **Installable Options** area. The **Update Now** option overwrites any existing product configuration settings.

Windows 7	1. Click **Start**. 2. Click **Devices and Printers**. 3. Right-click the product driver icon, and then select **Printer properties**. 4. Click the **Device Settings** tab. 5. Expand the area for **Installable Options**. 6. Next to **Automatic Configuration**, select **Update Now**. 7. Click **OK**. **NOTE:** If the memory is not updated correctly after using the **Update Now** option, you can manually select the total amount of memory installed in the product in the **Installable Options** area. The **Update Now** option overwrites any existing product configuration settings.
Mac OS X 10.4	1. From the Apple menu , click the **System Preferences** menu and then click the **Print & Fax** icon. 2. Select the product in the left side of the window. 3. Click the **Printer Setup** button. 4. Click the **Installable Options** menu.
Mac OS X 10.5 and 10.6	1. From the Apple menu , click the **System Preferences** menu and then click the **Print & Fax** icon. 2. Select the product in the left side of the window. 3. Click the **Options & Supplies** button. 4. Click the **Driver** tab. 5. Configure the installed options.

Tray

NOTE: Use this procedure to remove Tray 2 and the optional Trays 3, 4, and 5.

1. Pull the tray straight out of the product until it stops.

   Figure 2-16 Remove the tray (1 of 2)

   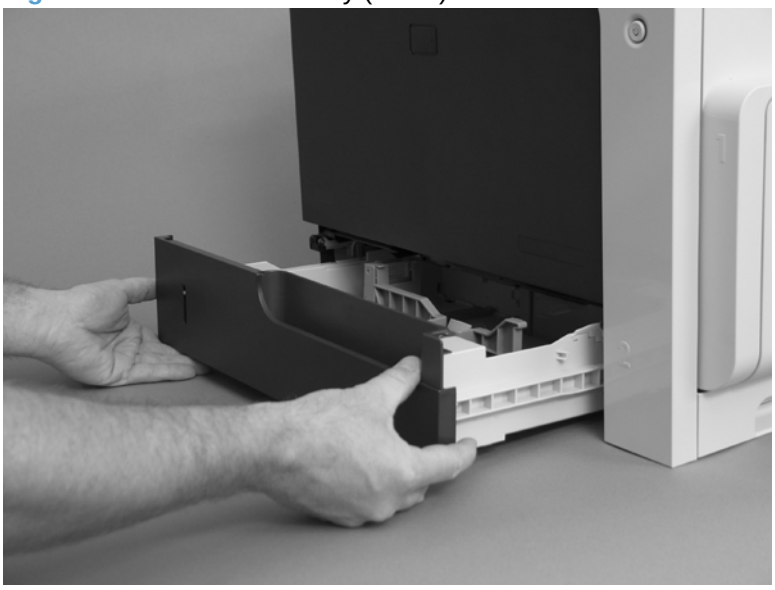

2. Carefully lift up on the tray to release it, and then remove the tray.

   Figure 2-17 Remove the tray (2 of 2)

Fuser

△ **CAUTION:** The fuser might be hot. Allow enough time after turning off the product power for the fuser to cool.

NOTE: The product detects a new fuser using a fusible link that blows after 100 pages have been printed. If a new fuser is installed for troubleshooting purposes, be sure to remove it before printing 100 pages.

1. Open the right-door assembly.

   Figure 2-18 Remove the fuser (1 of 2)

2. Grasp the handles and squeeze the blue release levers.

   Pull the fuser straight out of the product to remove it.

   Figure 2-19 Remove the fuser (2 of 2)

Feed and separation rollers (Trays 2-5)

△ **CAUTION:** Do not touch the spongy roller surface unless you are replacing the roller. Skin oils on the roller can cause paper pickup problems.

1. Locate the feed and separation rollers for the tray.

   TIP: You do not have to separate the product from the feeder to remove these rollers. Remove the cassette, and then reach up into the cavity to remove the rollers.

2. Release two tabs, and then remove the rollers.

   Reinstallation tip When you reinstall the rollers, make sure that the rollers snap into place.

Figure 2-20 Remove the Pickup and feed rollers (Trays 2-5)

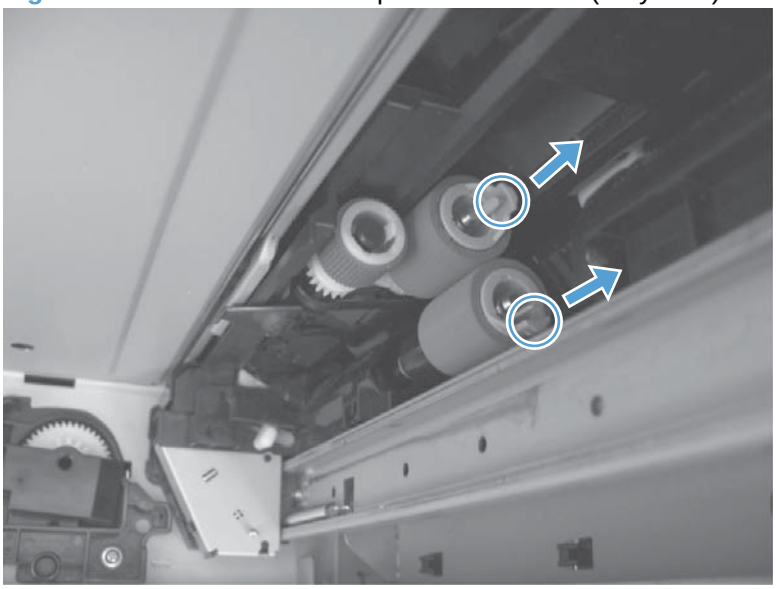

Pickup roller (Tray 1)

△ **CAUTION:** Do not touch the spongy roller surface unless you are replacing the roller. Skin oils on the roller can cause paper pickup problems.

1. Open Tray 1.

Figure 2-21 Remove the pickup roller (Tray 1) (1 of 5)

2. Push the top edge of the cover to release the tabs.

Figure 2-22 Remove the pickup roller (Tray 1) (2 of 5)

3. Open the right-door assembly, and then remove the cover.

Figure 2-23 Remove the pickup roller (Tray 1) (3 of 5)

4. Release the two blue tabs.

Figure 2-24 Remove the pickup roller (Tray 1) (4 of 5)

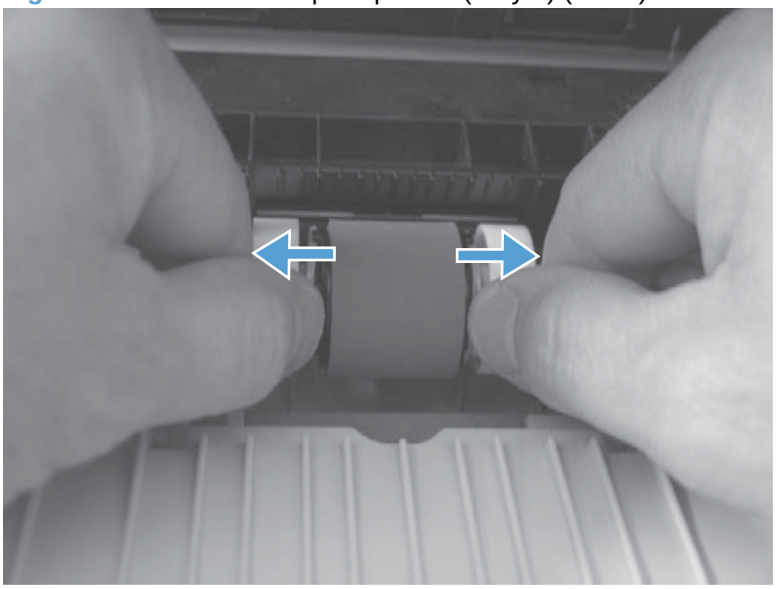

5. Rotate the roller body away from the product to remove it.

Figure 2-25 Remove the pickup roller (Tray 1) (5 of 5)

Secondary transfer roller

△ **CAUTION:** Do not touch the spongy roller surface unless you are replacing the roller. Skin oils on the roller can cause image quality problems.

1. Open the right-door assembly.

   Figure 2-26 Remove the transfer roller (1 of 3)

2. Use the blue lever to lower the secondary transfer assembly.

   Figure 2-27 Remove the transfer roller (2 of 3)

   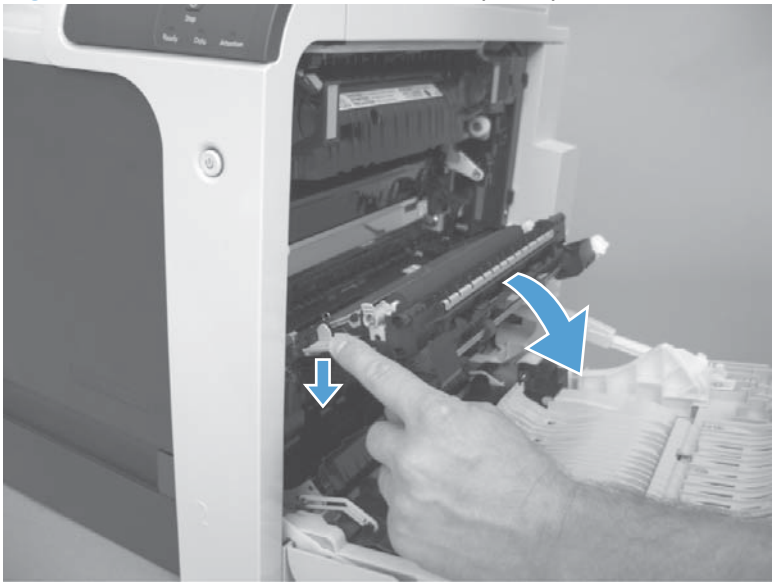

3. Grasp the roller shaft collars, and lift the transfer roller off of the product.

Figure 2-28 Remove the transfer roller (3 of 3)

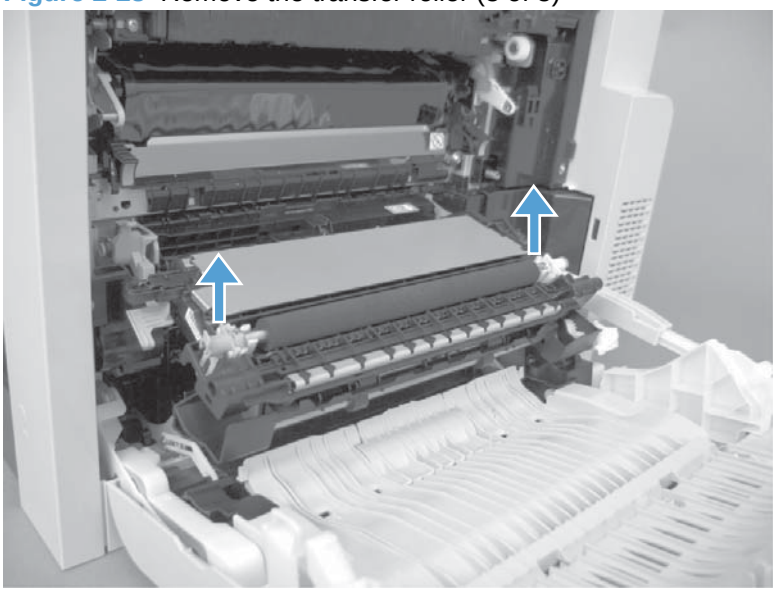

Reinstall the transfer roller

When you reinstall the transfer roller, make sure that the pins on the shaft collars align with the holes in the mounting assembly. After installing the new transfer roller, remove the protective cover.

Figure 2-29 Reinstall the transfer roller

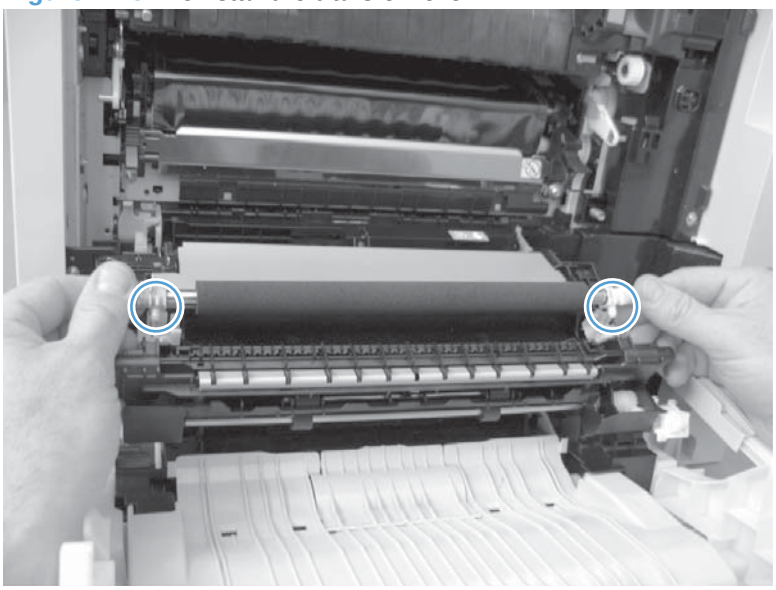

Intermediate transfer belt (ITB)

△ **CAUTION:** Do not touch the black-plastic belt. Skin oils and fingerprints on the belt can cause print-quality problems. Always place the ITB on a flat surface in a safe and protected location.

1. Open the right-door assembly.

Figure 2-30 Remove the intermediate transfer belt (1 of 4)

2. Use the blue lever to lower the secondary transfer assembly.

Figure 2-31 Remove the intermediate transfer belt (2 of 4)

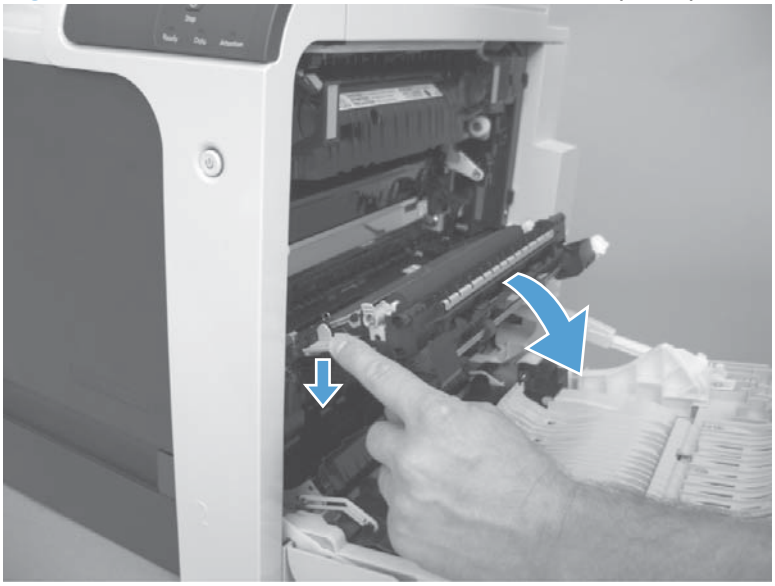

3. Grasp the small handles on the ITB and then pull the ITB out of the product until two large handles expand along the right- and left-side of the ITB.

Figure 2-32 Remove the intermediate transfer belt (3 of 4)

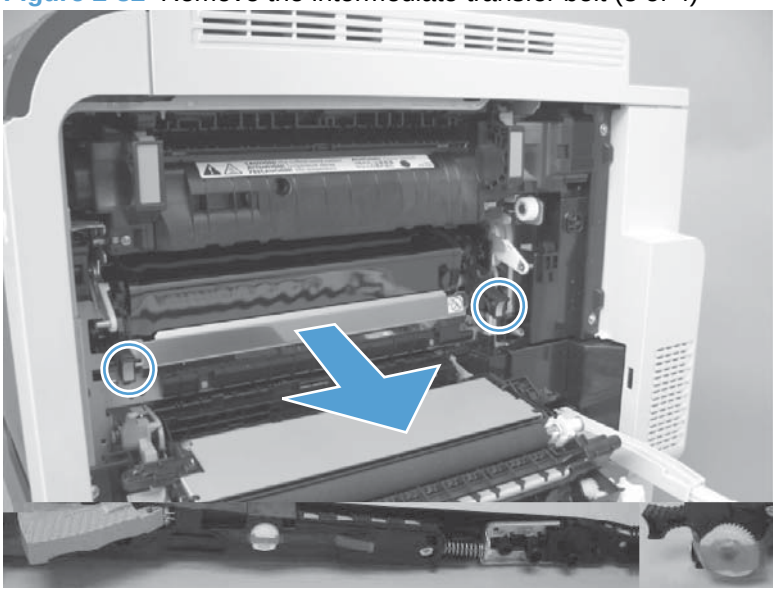

External panels, covers, and doors

Identification and location

Figure 2-34 External panels, covers, and doors; identification and location

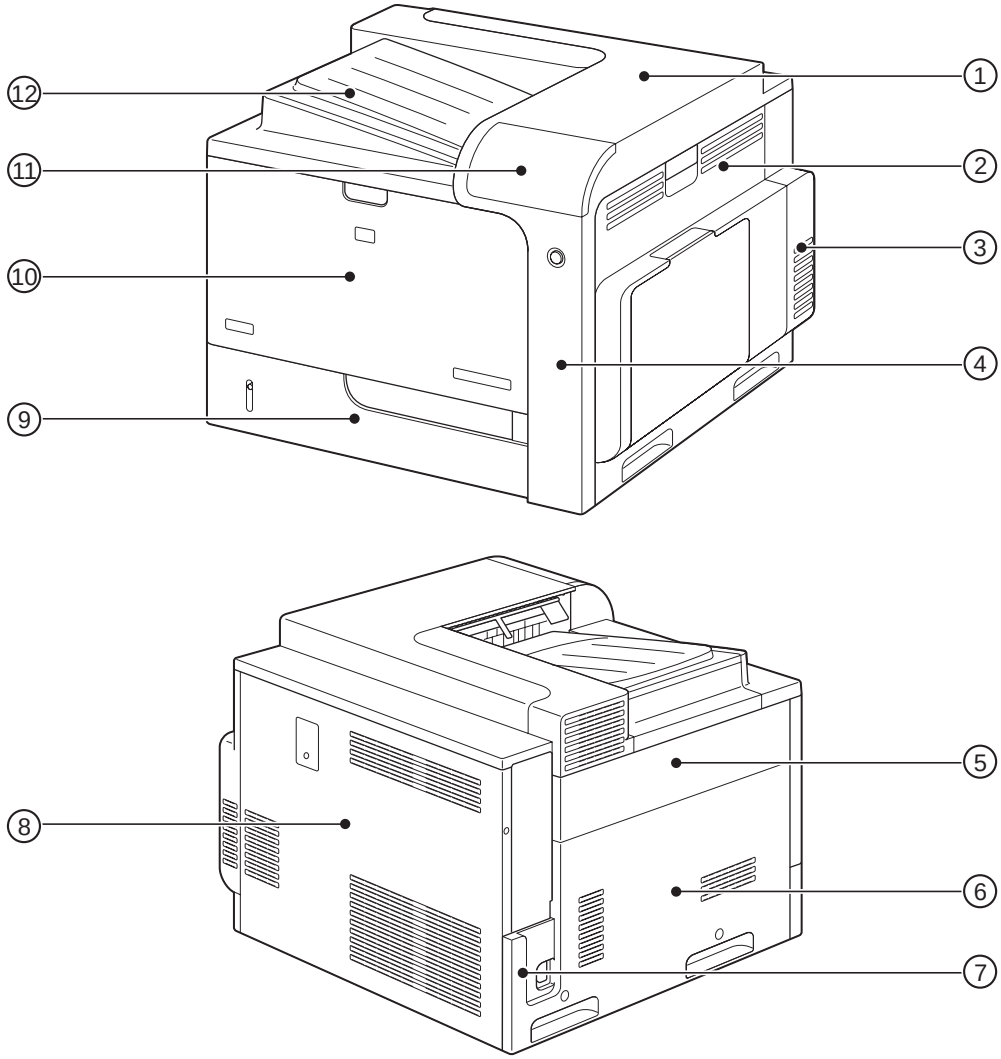

Item	Description	Item	Description
1	Rear-top cover (see Rear-top cover on page 102)	7	Power-supply cover (see Power-supply cover on page 98)
2	Right-door assembly (see Right-door assembly on page 113)	8	Rear cover (see Rear cover on page 112)
3	Right-rear cover (see Right-rear cover on page 110)	9	Tray cassette (see Tray on page 84)
4	Right-front cover (see Right-front cover on page 103)	10	Front-door assembly (see Front-door assembly on page 107)
5	Upper-left cover (see Upper-left cover on page 96)	11	Control-panel assembly (see Control-panel assembly on page 105)
6	Left cover (see Left cover on page 99)	12	Front-top cover (see Front-top cover on page 100)

Upper-left cover

1. Open the front-door assembly.

   Figure 2-35 Remove the upper-left cover (1 of 3)

2. Remove one screw.

   Figure 2-36 Remove the upper-left cover (2 of 3)

3. Release two tabs, slightly push the cover upward and toward the rear of the product, pull outward on the rear corner, and then remove the upper-left cover.

Figure 2-37 Remove the upper-left cover (3 of 3)

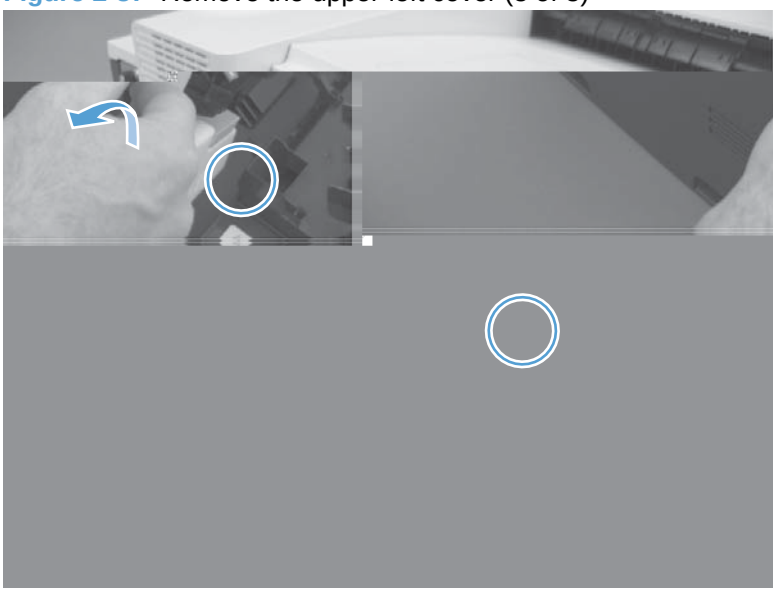

Power-supply cover

▲ Remove one screw (callout 1), release one tab (callout 2), and then remove the power-supply cover (callout 3).

Figure 2-38 Remove the power-supply cover

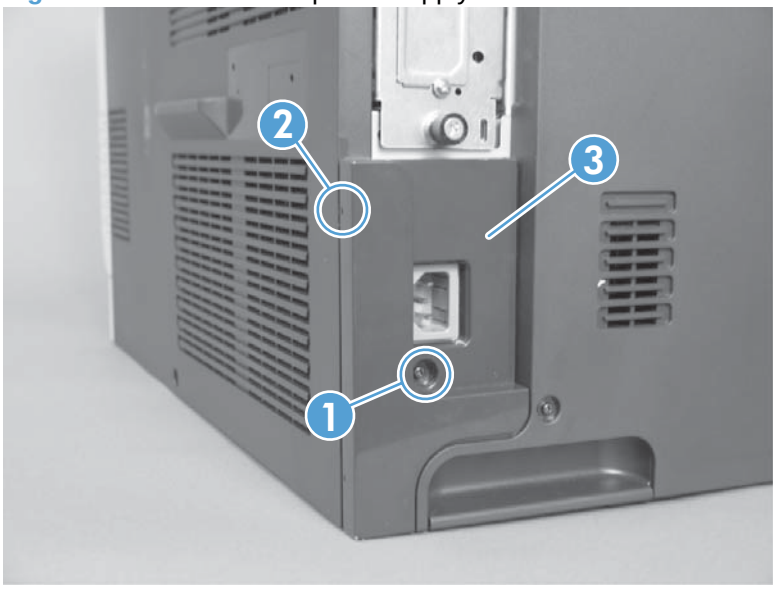

Left cover

Before proceeding, remove the following components:

- Upper-left cover. See Upper-left cover on page 96.
- Power-supply cover. See Power-supply cover on page 98.

Remove the left cover

1. Open the front-door assembly.
2. Remove four screws.

   Figure 2-39 Remove the left cover (1 of 2)

   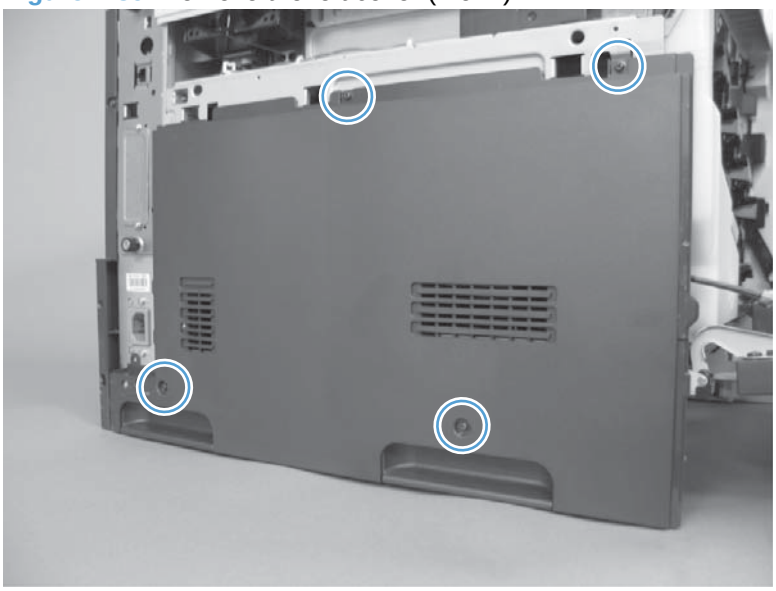

3. Slide the left cover toward the rear of the product, and then remove.

   Figure 2-40 Remove the left cover (2 of 2)

   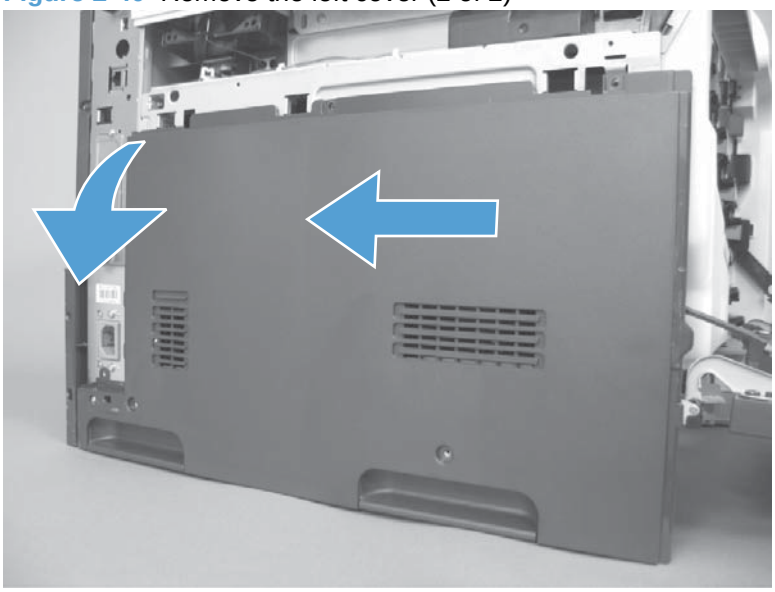

Front-top cover

Before proceeding, remove the following components:

- Upper-left cover. See Upper-left cover on page 96.

Remove the front-top cover

1. Open the front-door assembly.
2. Remove three screws.

   Figure 2-41 Remove the front-top cover (1 of 3)

   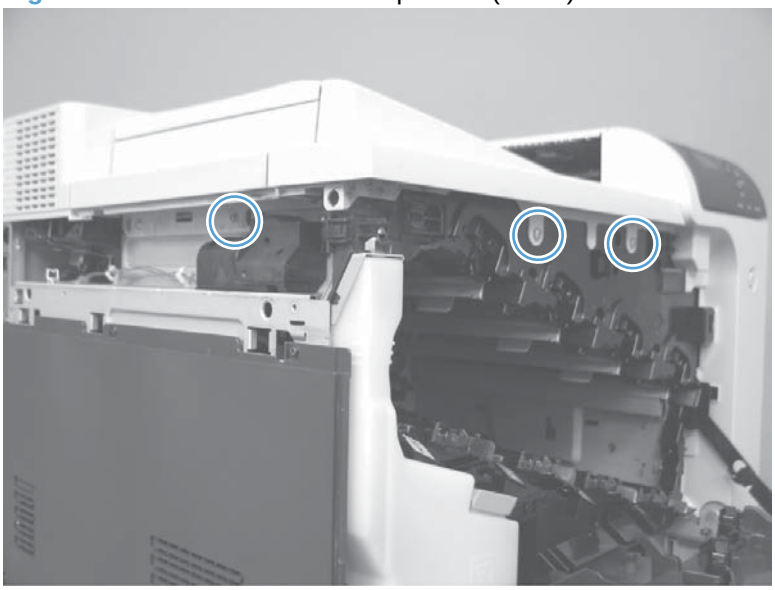

3. Flex the back left corner of the cover and lift to release the pin.

   Figure 2-42 Remove the front-top cover (2 of 3)

   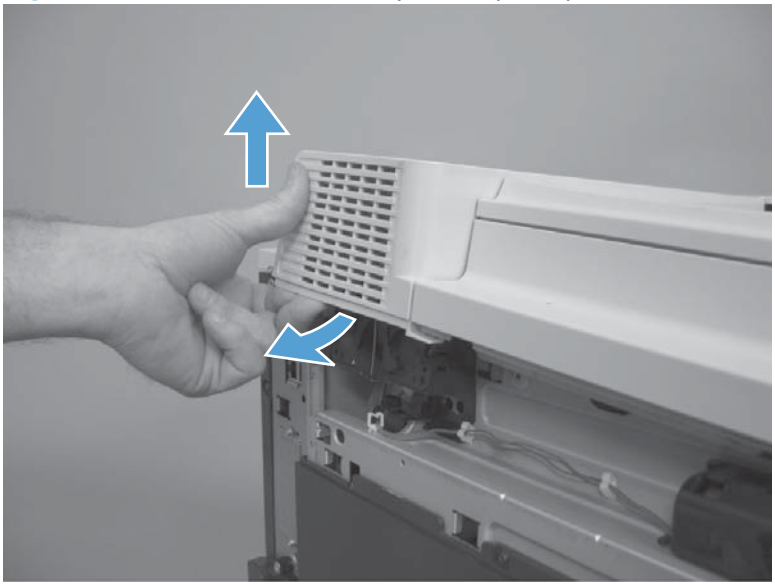

4. Remove the cover.

Figure 2-43 Remove the front-top cover (3 of 3)

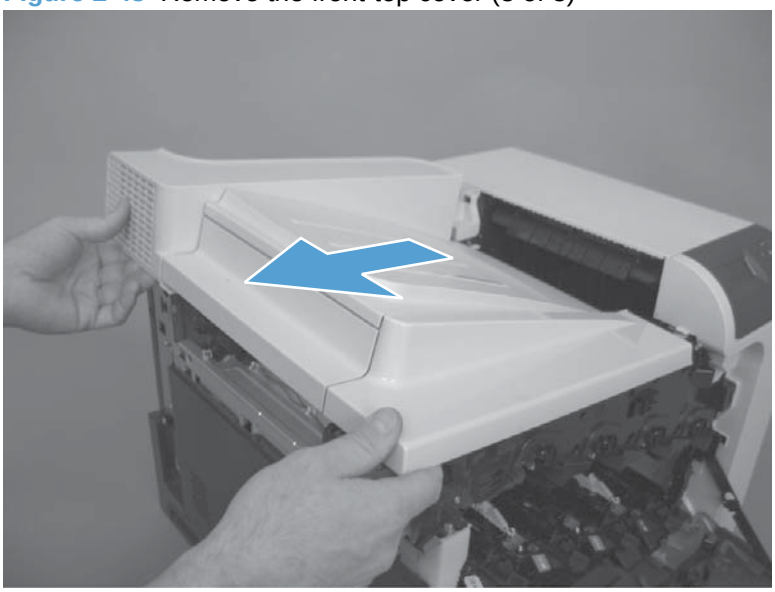

Rear-top cover

Before proceeding, remove the following components:

- Upper-left cover. See Upper-left cover on page 96.
- Front-top cover. See Front-top cover on page 100.

Remove the rear-top cover

1. Remove two screws.

   Figure 2-44 Remove the rear-top cover (1 of 2)

   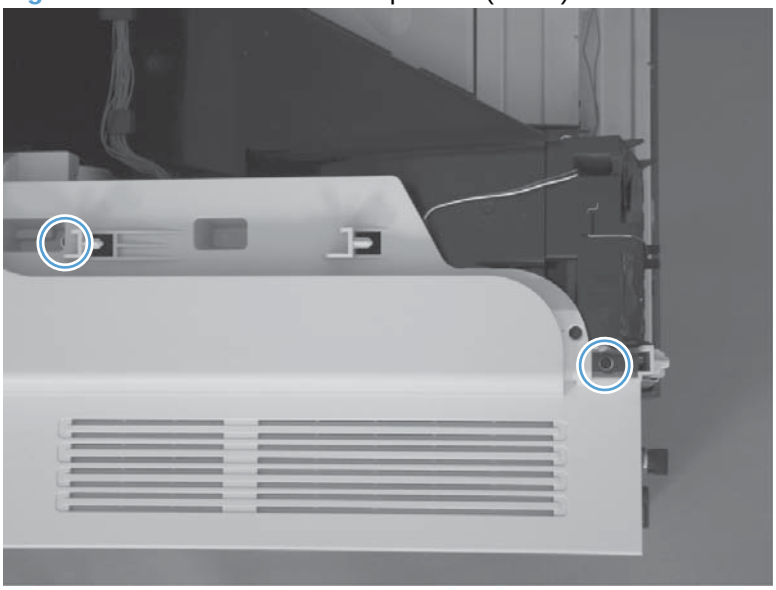

2. Open the right-door assembly.
3. Release three tabs (callout 1) and then remove the cover (callout 2).

   Figure 2-45 Remove the rear-top cover (2 of 2)

   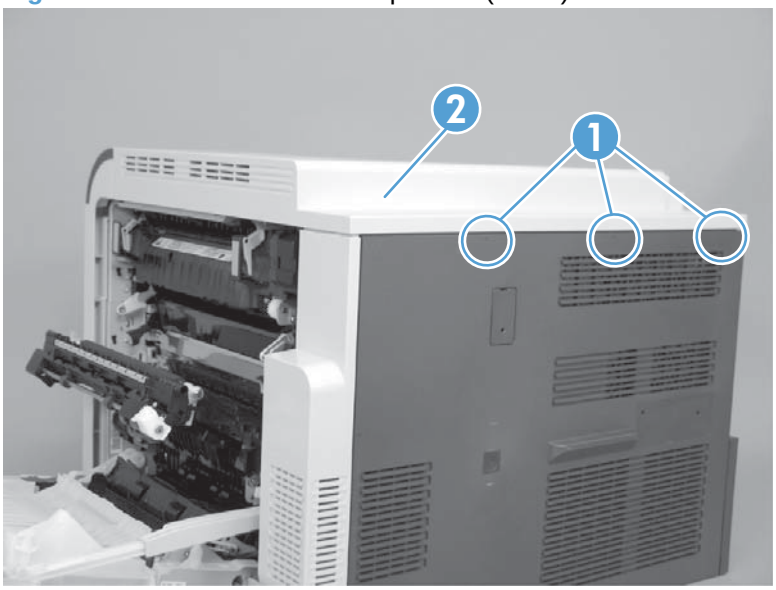

Right-front cover

Before proceeding, remove the following components:

- Upper-left cover. See Upper-left cover on page 96.
- Front-top cover. See Front-top cover on page 100.
- Rear-top cover. See Rear-top cover on page 102.

Remove the right-front cover

NOTE: Be careful. When removing the cover, do not dislodge the power button. If the button is dislodged, see Reinstall the power button on page 104 to reinstall it.

1. Open the right-door assembly. Carefully lift the right-front cover to release one pin.

Figure 2-46 Remove the right-front cover (1 of 3)

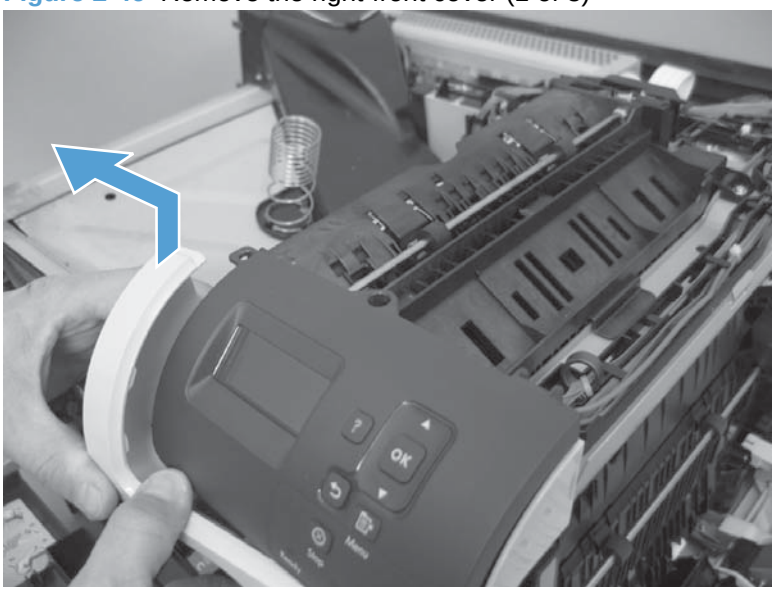

Figure 2-47 Remove the right-front cover (2 of 3)

2. Release two tabs, and then remove the right-front cover.

Figure 2-48 Remove the right-front cover (3 of 3)

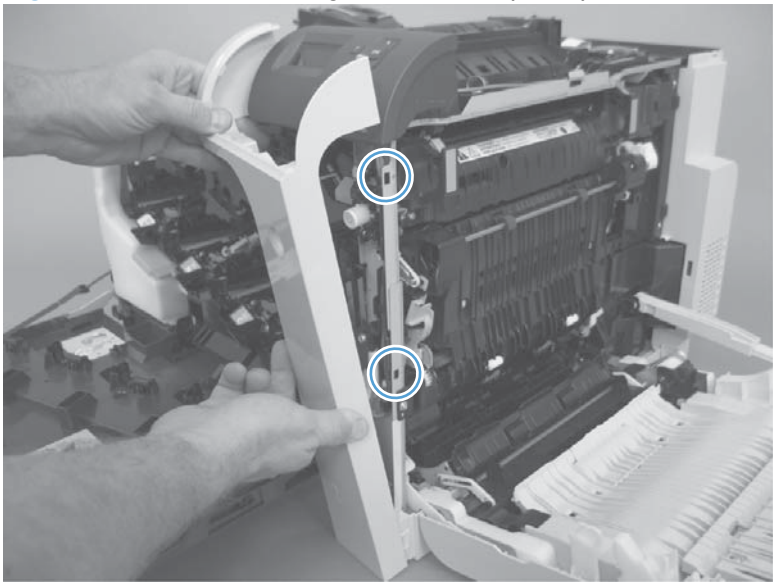

Reinstall the power button

Snap the power button into the holders on the cover. Make sure that the spring is correctly installed.

Figure 2-49 Reinstall the power button

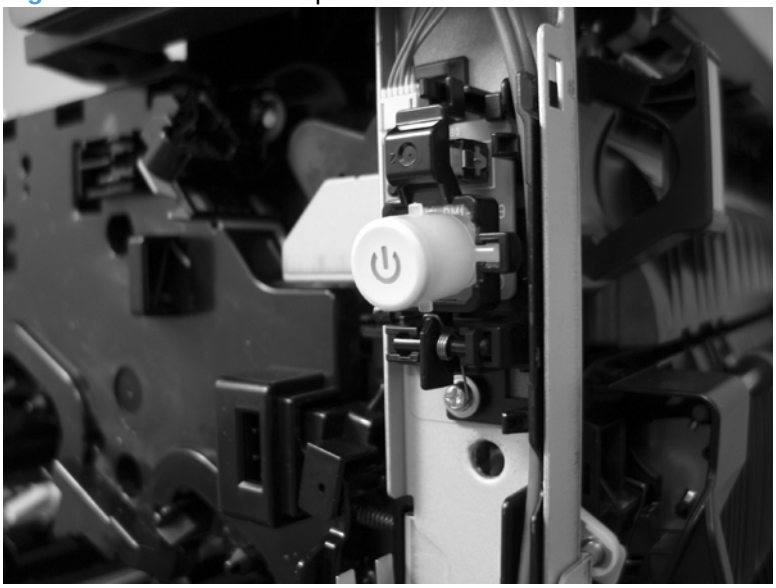

Control-panel assembly

Before proceeding, remove the following components:

- Upper-left cover. See Upper-left cover on page 96.
- Front-top cover. See Front-top cover on page 100.
- Rear-top cover. See Rear-top cover on page 102.
- Right-front cover. See Right-front cover on page 103.

Remove the control-panel assembly

1. Remove two screws.

Figure 2-50 Remove the control-panel assembly (1 of 2)

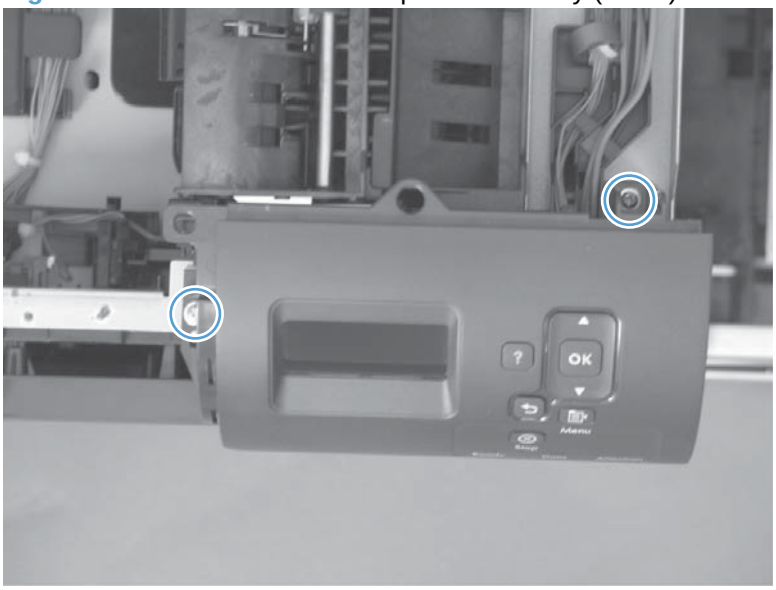

2. Disconnect one connector, and then remove the control-panel assembly.

Figure 2-51 Remove the control-panel assembly (2 of 2)

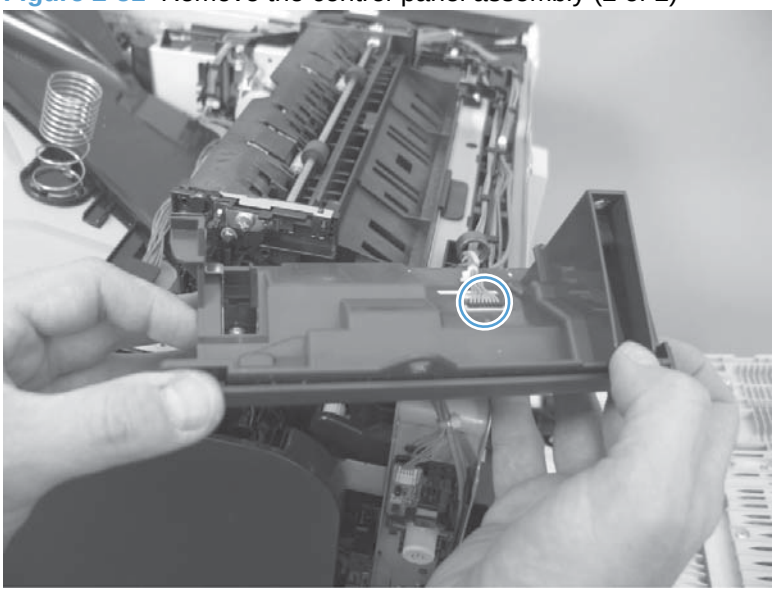

Front-door assembly

Before proceeding, remove the following components:

- Upper-left cover. See Upper-left cover on page 96.
- Front-top cover. See Front-top cover on page 100.
- Rear-top cover. See Rear-top cover on page 102
- Right-front cover. See Right-front cover on page 103

Remove the front-door assembly

1. Open the front-door assembly.
2. Release the right link arm by pushing the two segments together and then releasing.

Figure 2-52 Remove the front-door assembly (1 of 5)

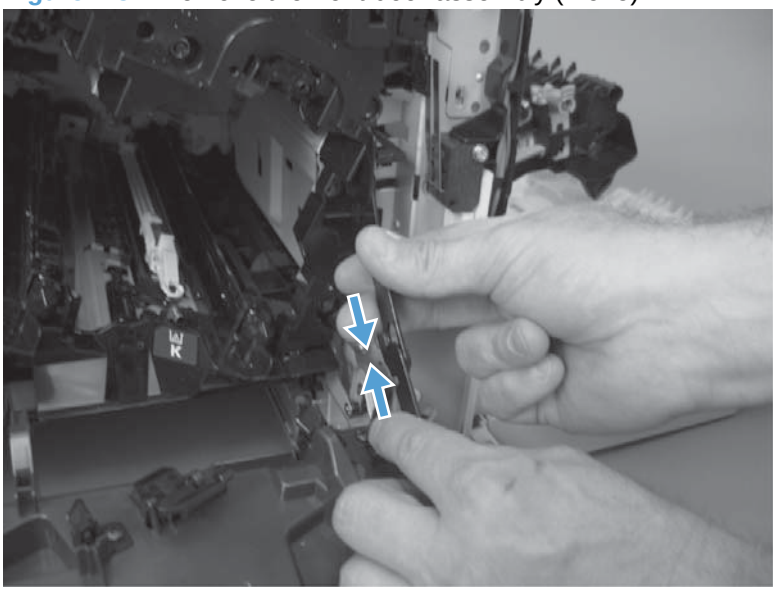

3. Squeeze the tab on the left link arm using needle nose pliers to release it from the front door assembly.

NOTE: Hold the link arm firmly when releasing to prevent it from snapping against the front of the product.

Figure 2-53 Remove the front-door assembly (2 of 5)

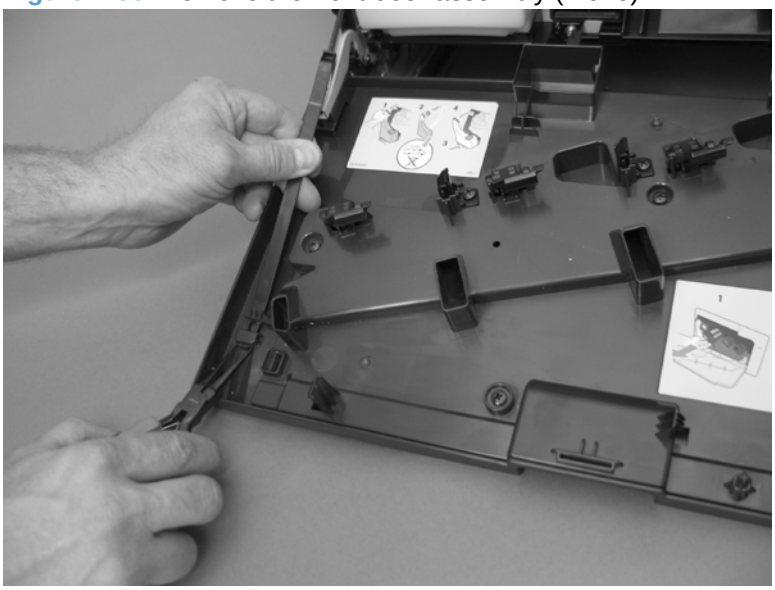

4. Remove two screws (callout 1).

Figure 2-54 Remove the front-door assembly (3 of 5)

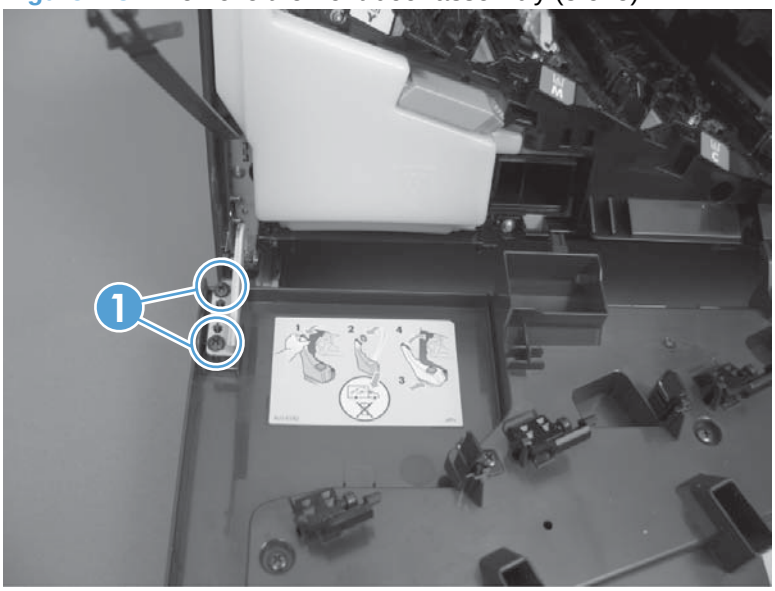

5. Remove two screws.

Figure 2-55 Remove the front-door assembly (4 of 5)

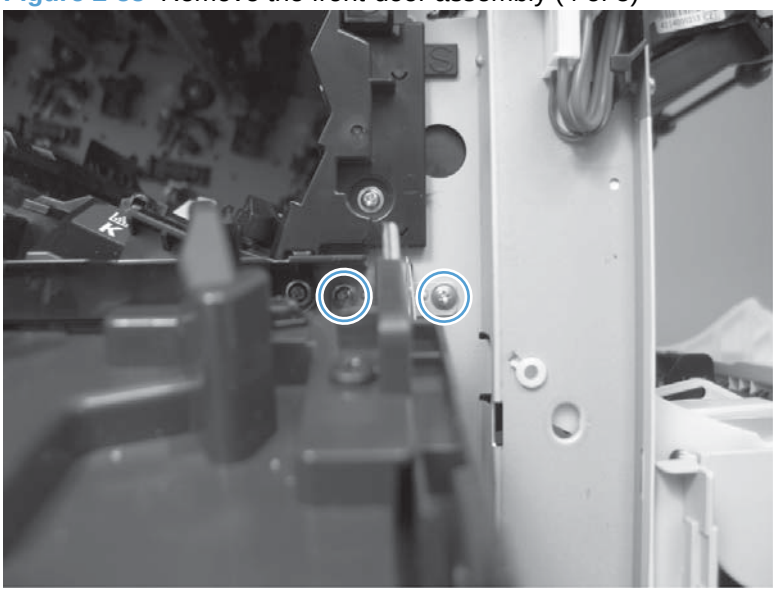

6. Remove the front-door assembly.

Figure 2-56 Remove the front-door assembly (5 of 5)

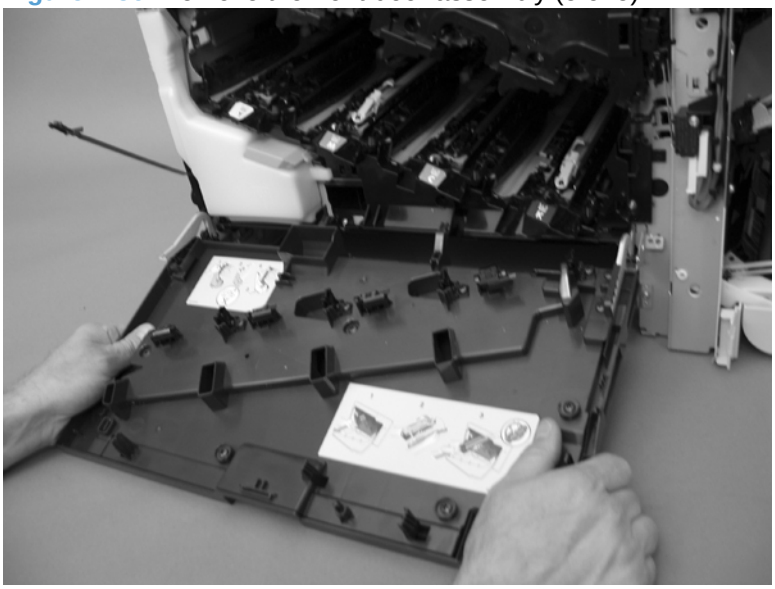

Right-rear cover

Before proceeding, remove the following components:

- Upper-left cover. See Upper-left cover on page 96.
- Front-top cover. See Front-top cover on page 100.
- Rear-top cover. See Rear-top cover on page 102.

Remove the right-rear cover

1. Open the right-door assembly.
2. Release one tab.

Figure 2-57 Remove the right-rear cover (1 of 2)

3. Lift the cover to remove.

Figure 2-58 Remove the right-rear cover (2 of 2)

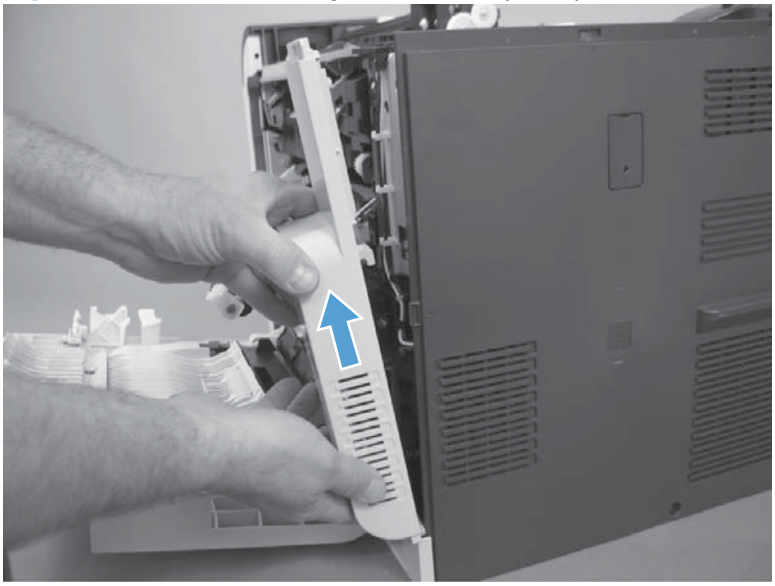

Rear cover

Before proceeding, remove the following components:

- Upper-left cover. See Upper-left cover on page 96.
- Power-supply cover. See Power-supply cover on page 98,
- Front-top cover. See Front-top cover on page 100.
- Rear-top cover. See Rear-top cover on page 102.

Remove the rear cover

▲ Remove two screws (callout 1), release three tabs (callout 2), and then remove the rear cover (callout 3).

Figure 2-59 Remove the rear cover

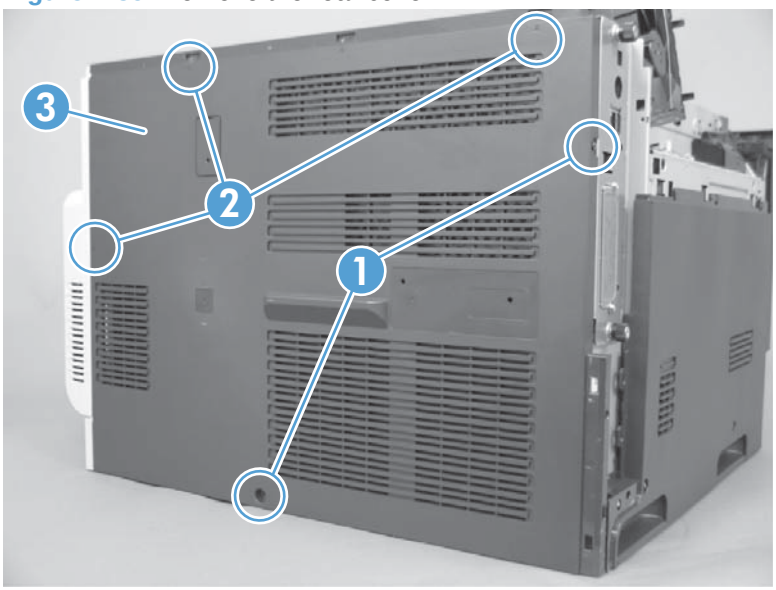

Right-door assembly

1. Open the right-door assembly.

   Figure 2-60 Remove the right-door assembly (1 of 9)

2. Carefully remove the hinge cover (callout 1).

   Figure 2-61 Remove the right-door assembly (2 of 9)

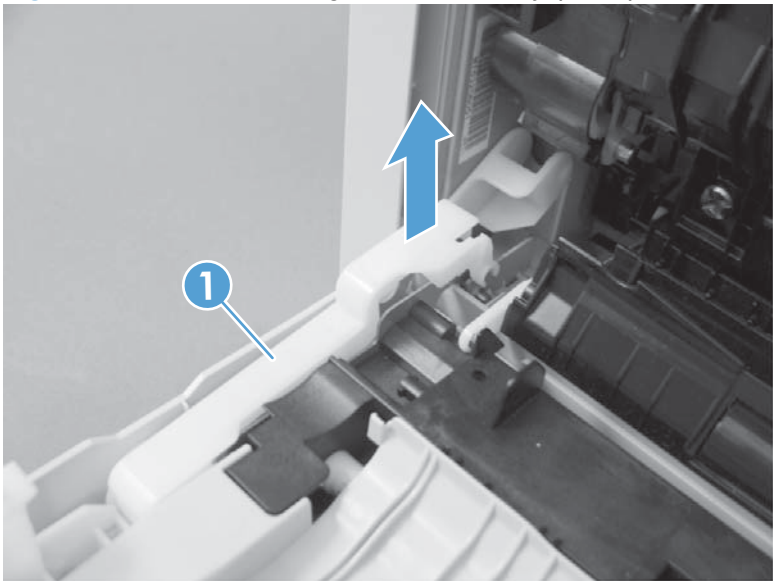

3. Remove three screws.

Figure 2-62 Remove the right-door assembly (3 of 9)

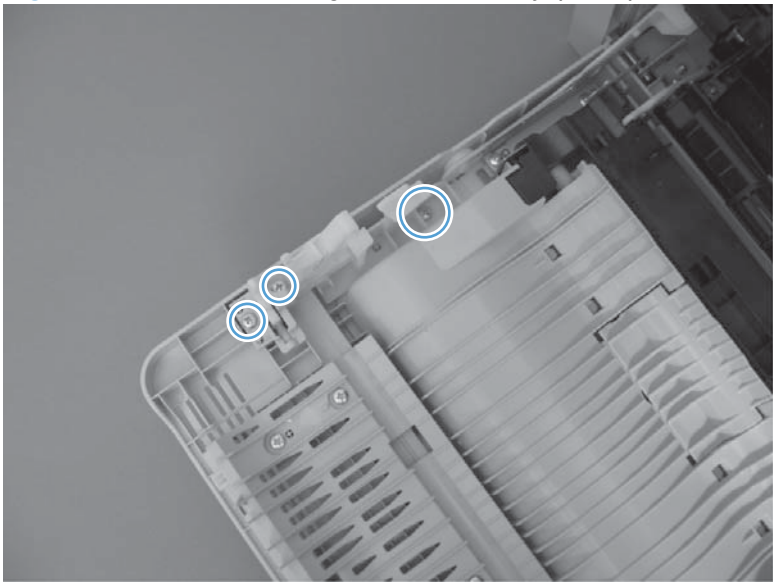

4. Remove the hinge assembly.

Reinstallation tip When the hinge is reinstalled, make sure that the tab (callout 1) is correctly positioned on the door.

Figure 2-63 Remove the right-door assembly (4 of 9)

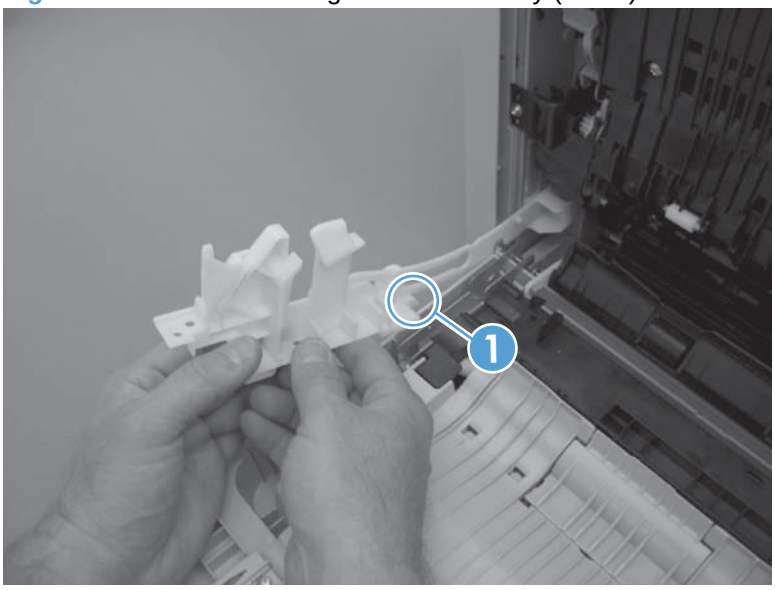

5. Release one pin, and then release the link arm (callout 1).

△ **CAUTION:** The link arm is spring loaded. Hold the arm securely (as shown) to prevent the spring from abruptly retracting.

Figure 2-64 Remove the right-door assembly (5 of 9)

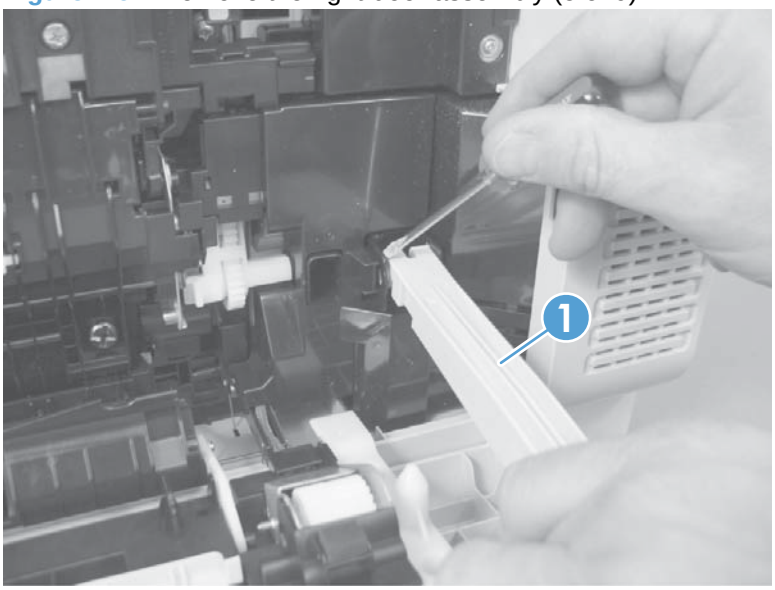

6. Release one tab, and then remove the cover (callout 1).

TIP: Lift up on the secondary transfer assembly to make removing the cover easier.

Figure 2-65 Remove the right-door assembly (6 of 9)

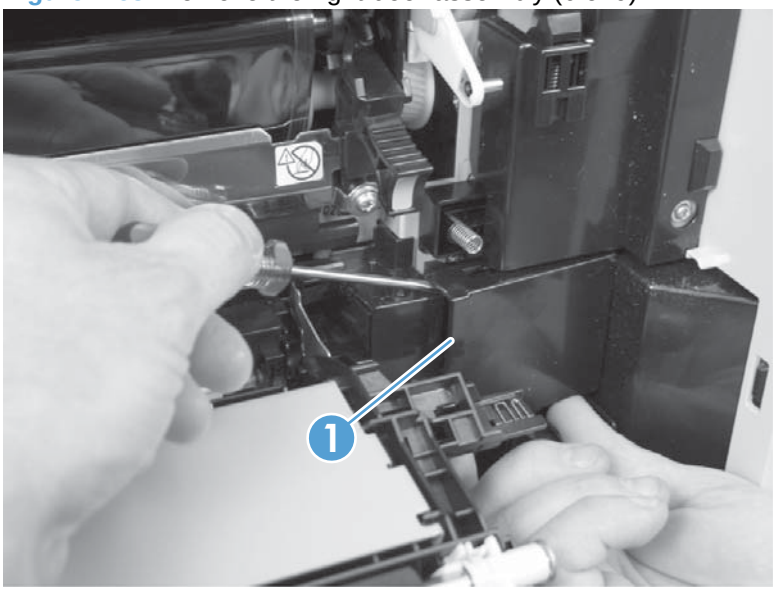

7. Disconnect two connectors.

Figure 2-66 Remove the right-door assembly (7 of 9)

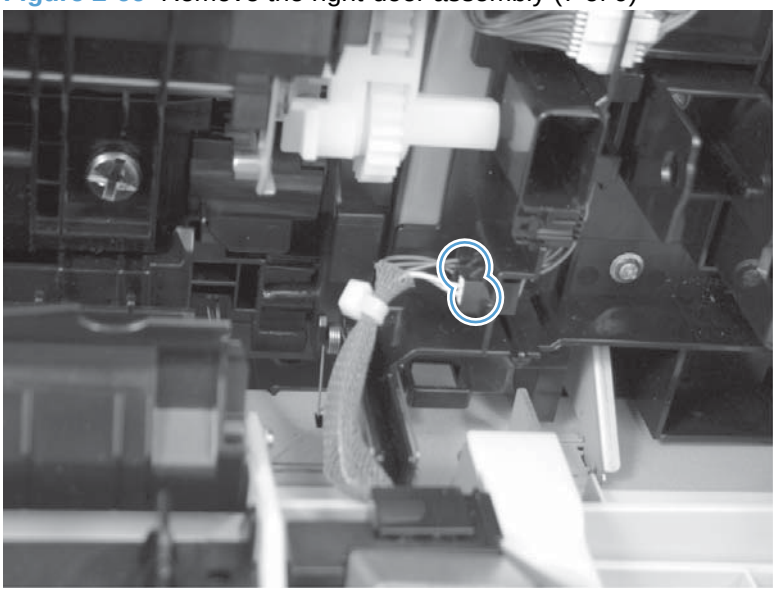

8. Lift two link arms to release.

Figure 2-67 Remove the right-door assembly (8 of 9)

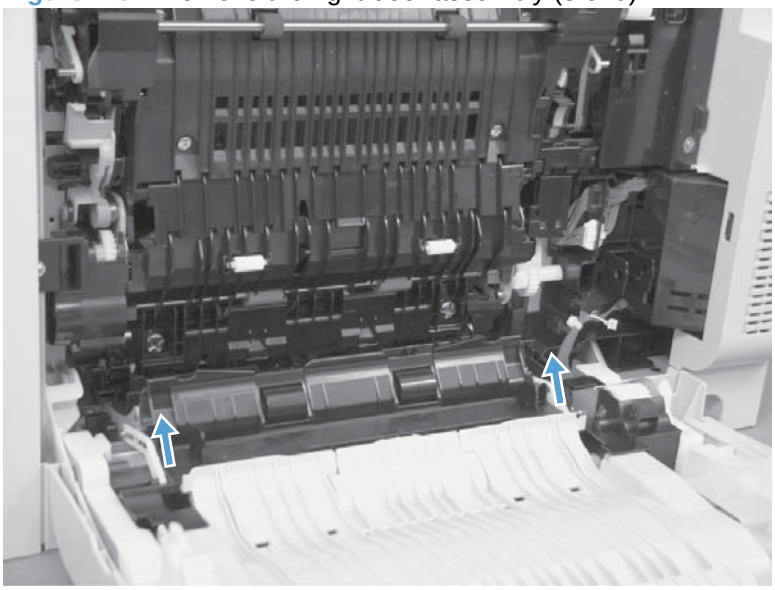

9. Slide the right-door assembly toward the front of the product and remove.

Figure 2-68 Remove the right-door assembly (9 of 9)

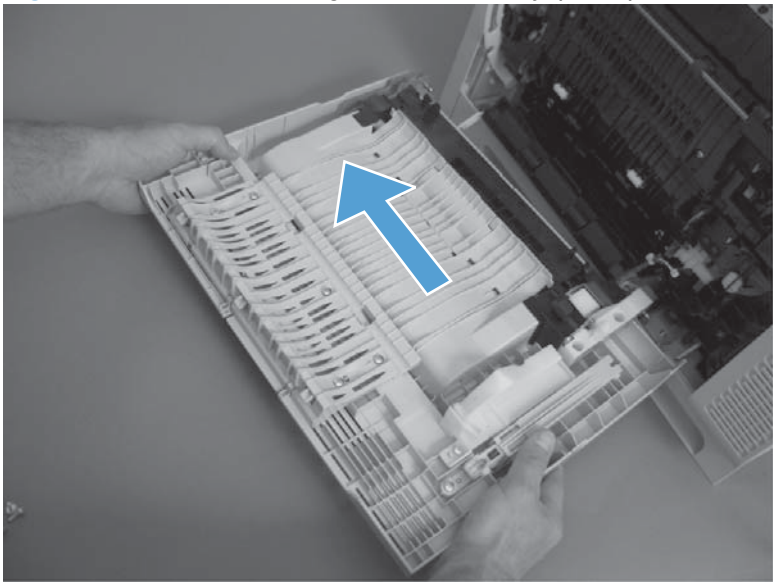

Internal assemblies

TIP: For clarity, some photos in this chapter show components removed that would not be removed to service the product. If necessary, remove the components listed at the beginning of a procedure before proceeding to service the product.

Cassette feed guide

TIP: If a page is jammed in the product, you might be able to access it by removing this guide.

1. Open the right-door assembly.

   Figure 2-69 Remove the cassette feed guide (1 of 2)

2. Remove two screws (callout 1), and then remove the cassette feed guide (callout 2).

   Figure 2-70 Remove the cassette feed (2 of 2)

   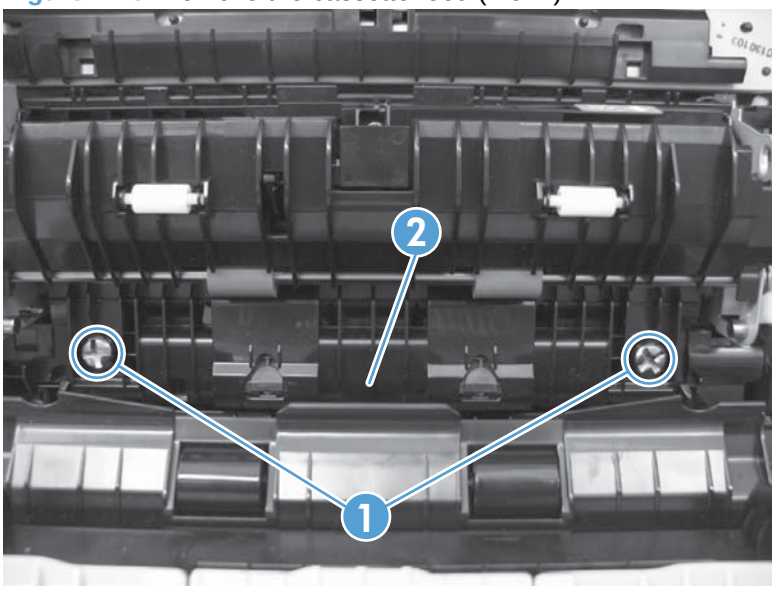

Secondary transfer assembly

The secondary transfer assembly includes the transfer roller.

1. Open the right-door assembly.

   Figure 2-71 Remove the secondary transfer assembly (1 of 3)

2. Release one tab and carefully remove the stopper.

   NOTE: You might have to slightly lift up on the corner of the assembly to release the stopper pin from the hole in the chassis.

   Figure 2-72 Remove the secondary transfer assembly (2 of 3)

   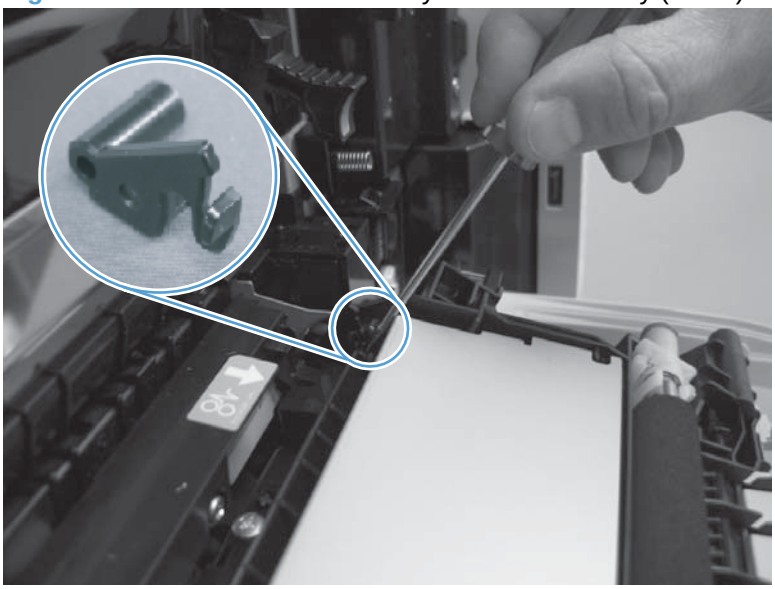

3. Remove the secondary transfer assembly.

△ **CAUTION:** Do not damage the blue release lever when removing the assembly.

Figure 2-73 Remove the secondary transfer assembly (3 of 3)

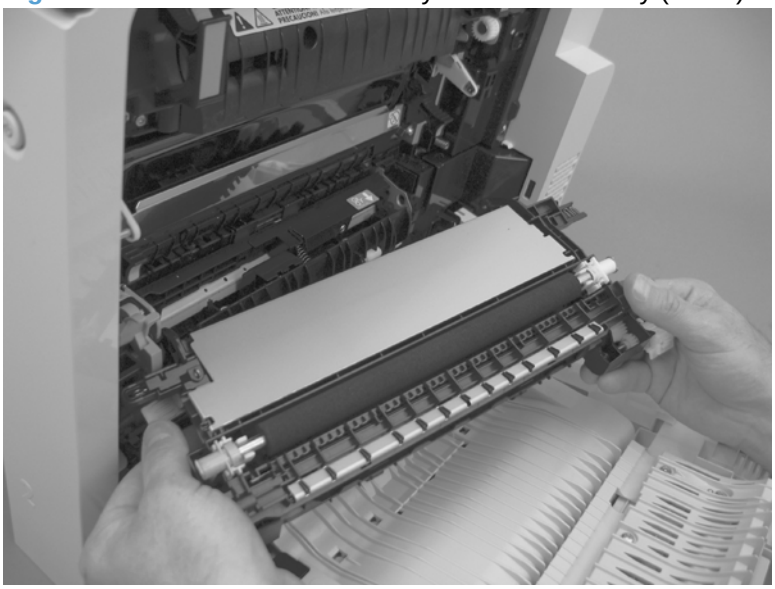

Reinstall the secondary transfer assembly

Press and hold the blue release lever when you reinstall the assembly.

Figure 2-74 Reinstall the secondary transfer assembly

Separation pad (Tray 1)

Before proceeding, remove the following components:

- Pickup roller. See Pickup roller (Tray 1) on page 87.
- Right door assembly. See Right-door assembly on page 113.

Remove the separation pad (Tray 1)

1. Remove two screws (callout 1) and the cover (callout 2).

   Figure 2-75 Remove the separation pad (1 of 6)

   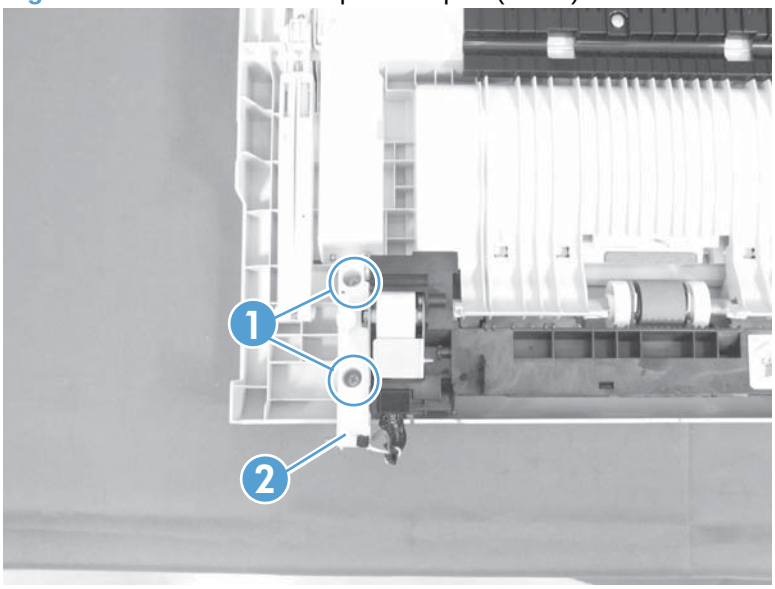

2. Remove two screws (callout 1) and separate Tray 1 (callout 2) from the door assembly.

   Figure 2-76 Remove the separation pad (2 of 6)

   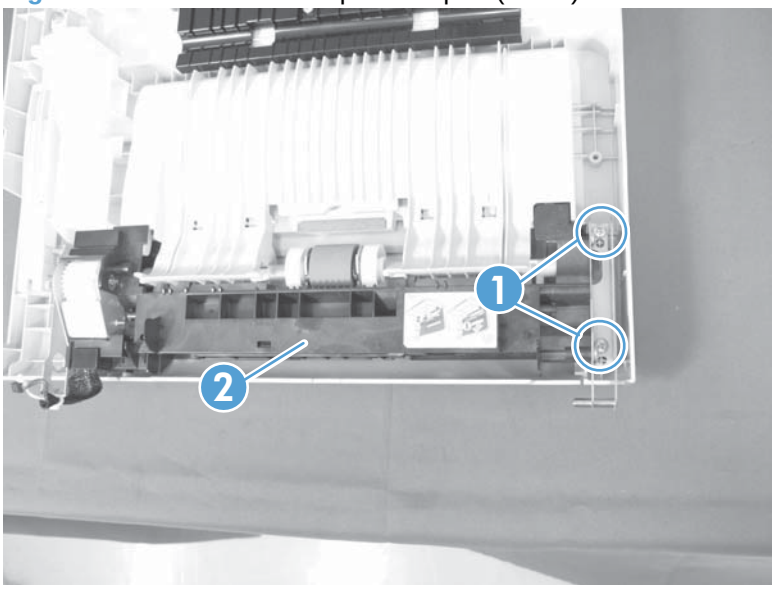

3. Release two tabs (callout 1) and slide the locking cap and sub roller toward the edge of the tray.

Figure 2-77 Remove the separation pad (3 of 6)

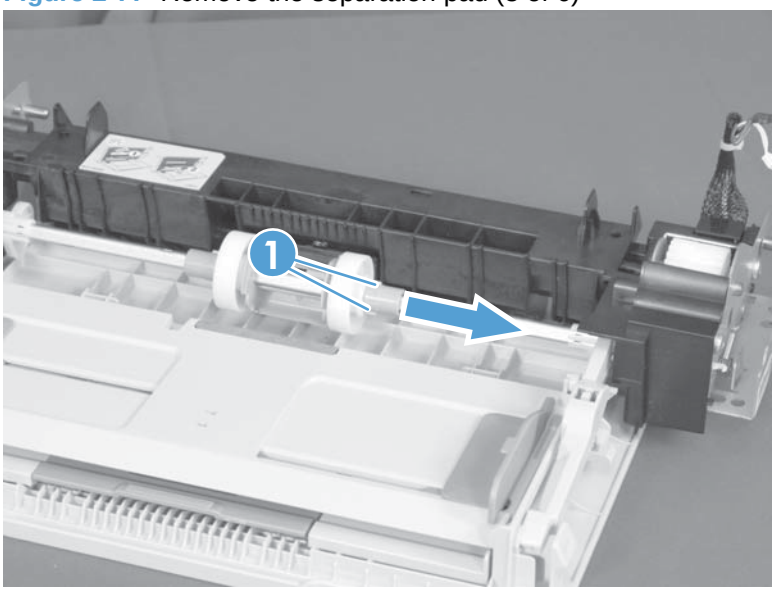

4. Release two tabs (callout 1) and slide the locking cap and sub roller toward the edge of the tray.

△ **CAUTION:** Do not damage the flag (callout 2).

Figure 2-78 Remove the separation pad (4 of 6)

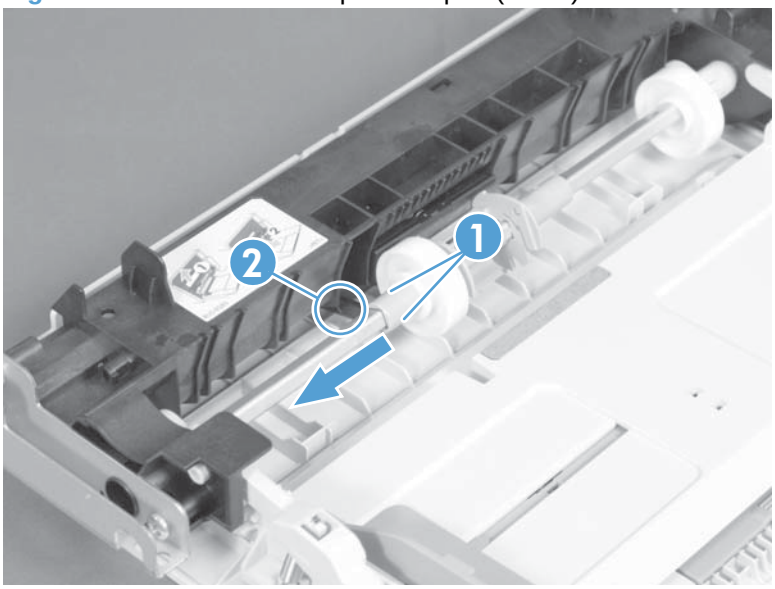

5. Release one tab (callout 1) and slide the pickup-roller holder toward the edge of the tray.

△ **CAUTION:** Do not damage the flag (callout 2).

Figure 2-79 Remove the separation pad (5 of 6)

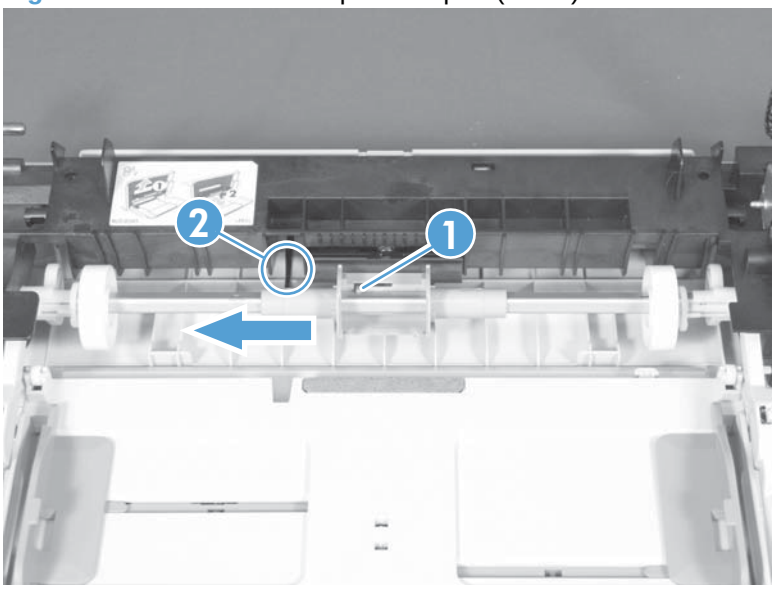

6. Release one tab (callout 1) and remove the separation pad.

Figure 2-80 Remove the separation pad (6 of 6)

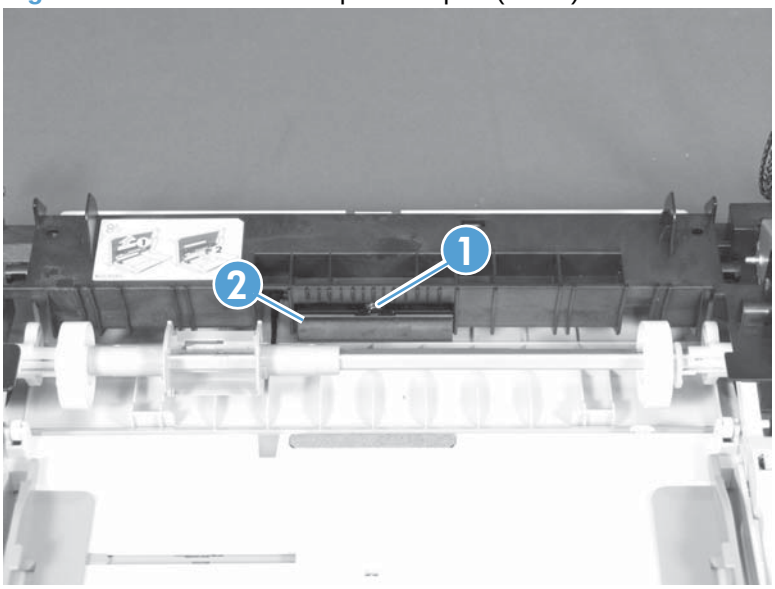

Registration density (RD) sensor assembly

Before proceeding, remove the following components:

- Intermediate transfer belt (ITB). See Intermediate transfer belt (ITB) on page 92.
- Secondary transfer assembly. See Secondary transfer assembly on page 119.

Remove the RD sensor assembly

1. Release one tab (callout 1), and then remove the cover (callout 2).

Figure 2-81 Remove the RD sensor assembly (1 of 7)

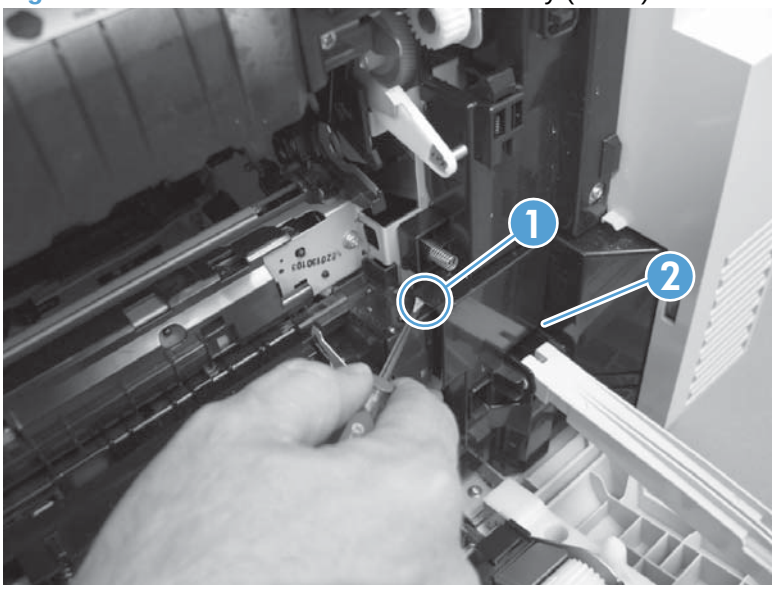

NOTE: When reinstalling the cover, make sure that the tabs are seated correctly.

Figure 2-82 Remove the RD sensor assembly (2 of 7)

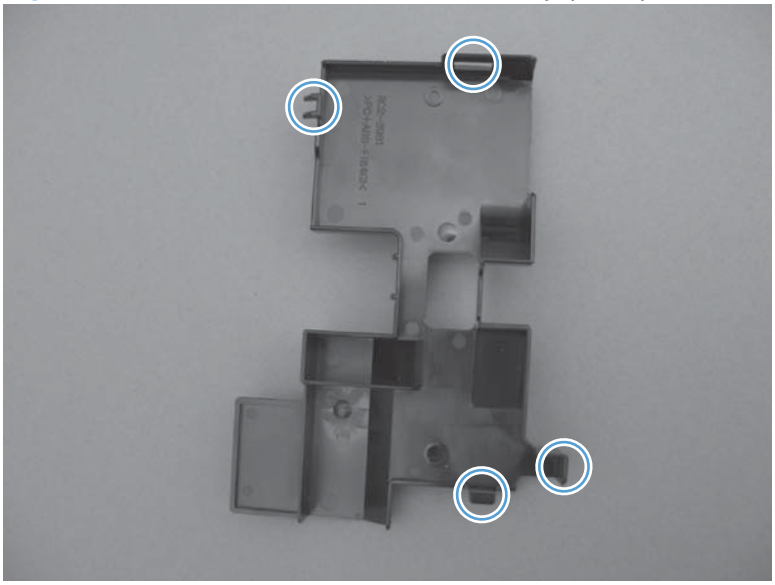

2. Release one tab, and then remove the wire-harness cover.

TIP: Open the front door to make it easier to remove the cover.

Figure 2-83 Remove the RD sensor assembly (3 of 7)

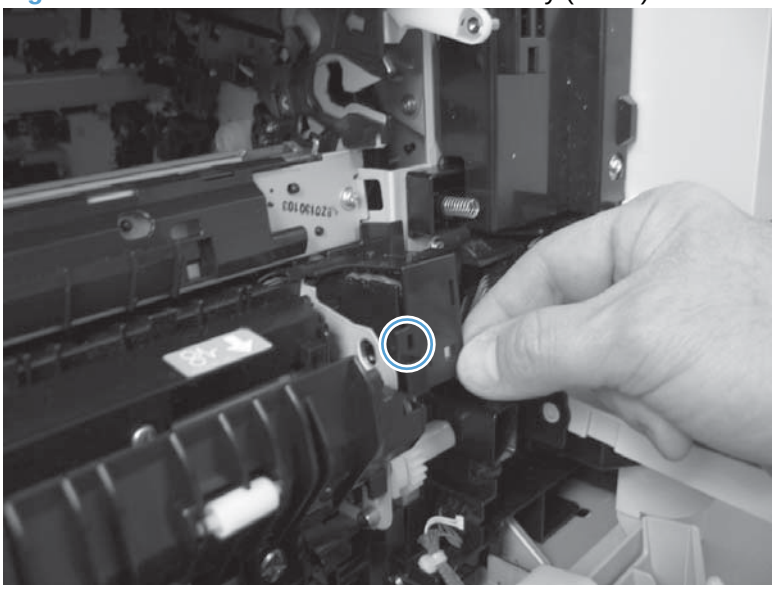

3. Disconnect three connectors.

Figure 2-84 Remove the RD sensor assembly (4 of 7)

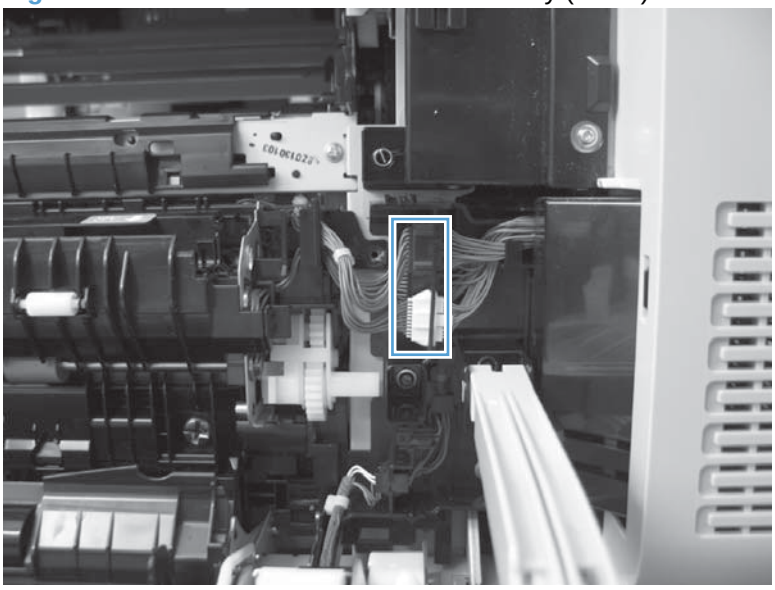

4. Remove two screws.

Figure 2-85 Remove the RD sensor assembly (5 of 7)

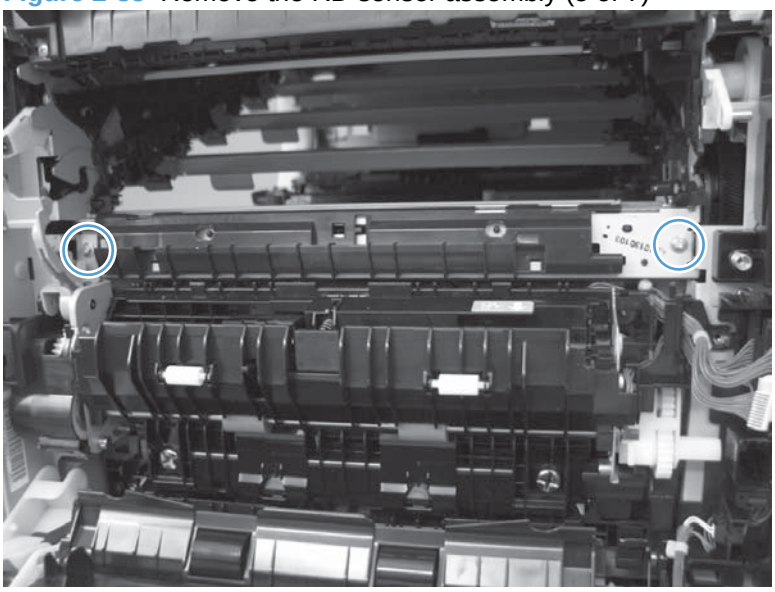

5. Slide the shutter toward the back side of the product. Keep the shutter in this position for the following step.

Figure 2-86 Remove the RD sensor assembly (6 of 7)

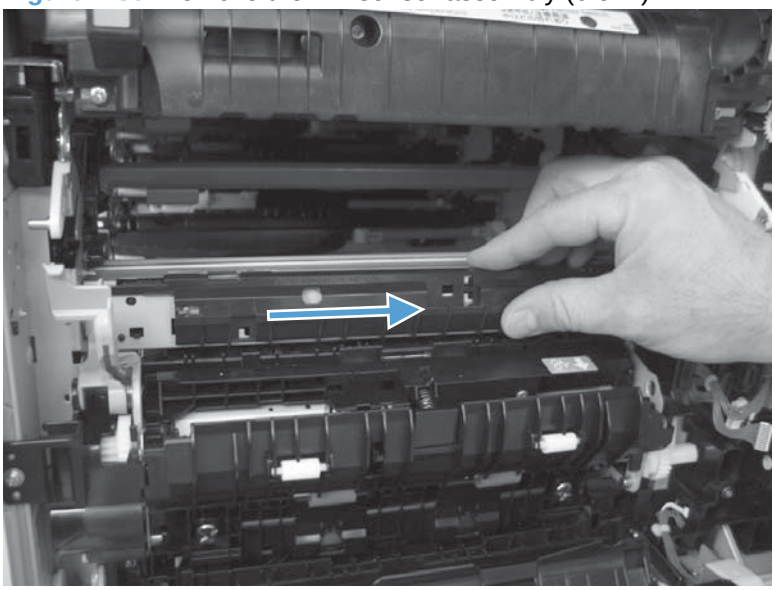

6. Carefully remove the assembly from the product.

△ **CAUTION:** Do not damage the shutter as it passes through the chassis.

Figure 2-87 Remove the RD sensor assembly (7 of 7)

Registration assembly

Before proceeding, remove the following components:

- Intermediate transfer belt (ITB). See Intermediate transfer belt (ITB) on page 92.
- Secondary transfer assembly. See Secondary transfer assembly on page 119.

Remove the registration assembly

NOTE: If a replacement registration assembly is installed, you must use the control-panel menus to reset the registration-roller count and input the media sensor value. See Service menu on page 420 and Service menu on page 420.

1. Release one tab (callout 1), and then remove the cover (callout 2).

Figure 2-88 Remove the registration assembly (1 of 8)

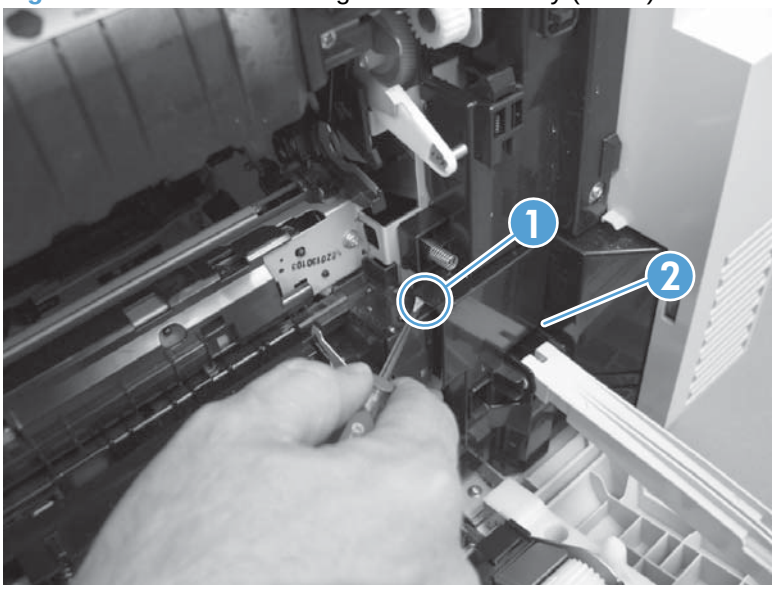

NOTE: When reinstalling the cover, be sure that the tabs are seated correctly.

Figure 2-89 Remove the registration assembly (2 of 8)

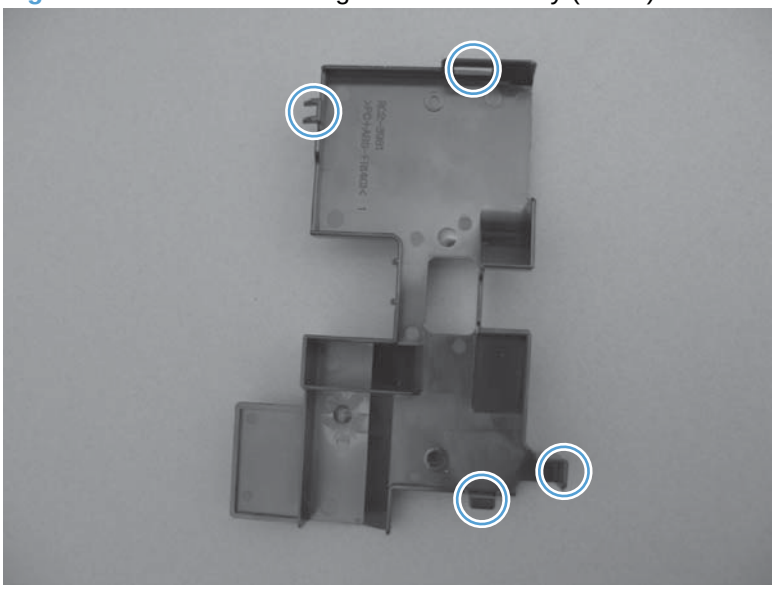

2. Release one tab, and then remove the wire-harness cover.

TIP: To make the cover easier to remove, open the front-door assembly to close the RD-sensor shutter.

Figure 2-90 Remove the registration assembly (3 of 8)

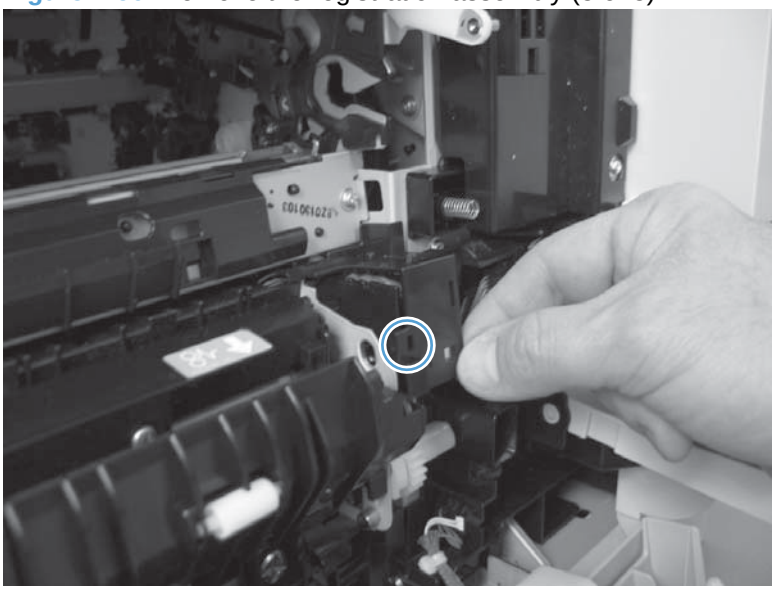

3. Disconnect two connectors.

Figure 2-91 Remove the registration assembly (4 of 8)

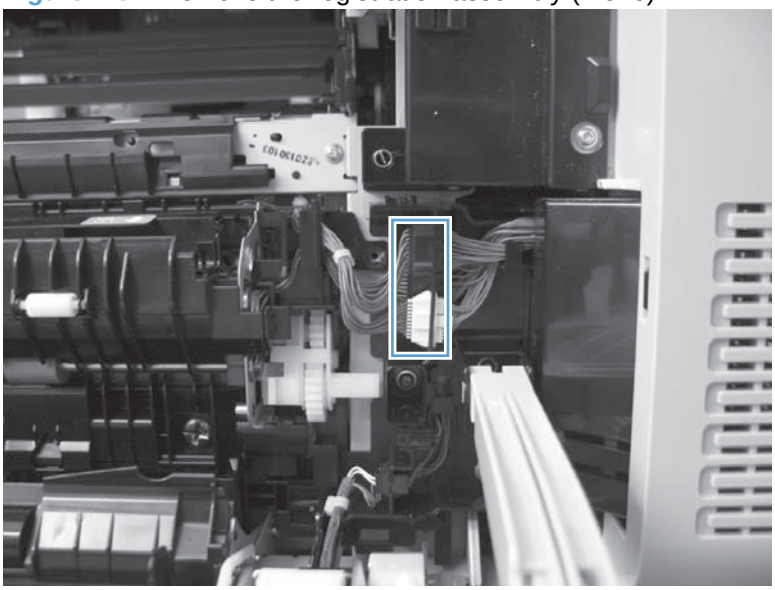

4. Remove two screws (callout 1), and then remove the cassette feed guide (callout 2).

Figure 2-92 Remove the registration assembly (5 of 8)

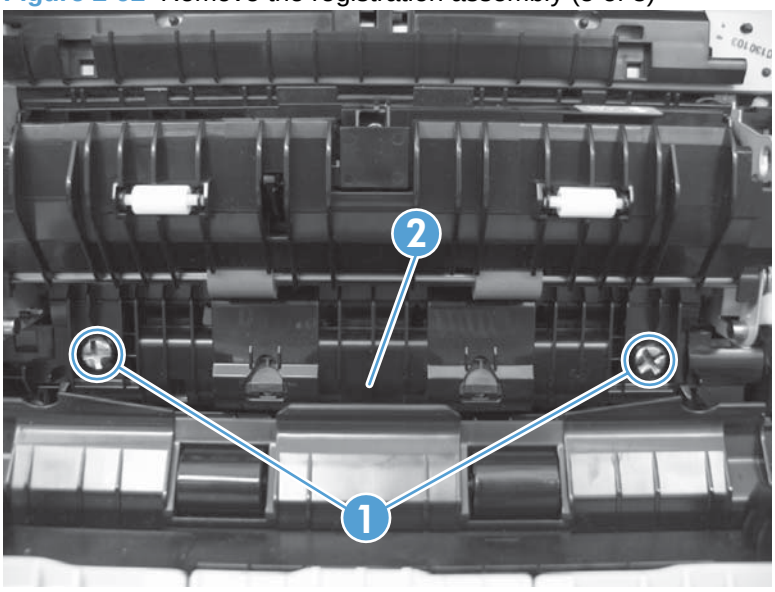

5. Remove four screws.

Figure 2-93 Remove the registration assembly (6 of 8)

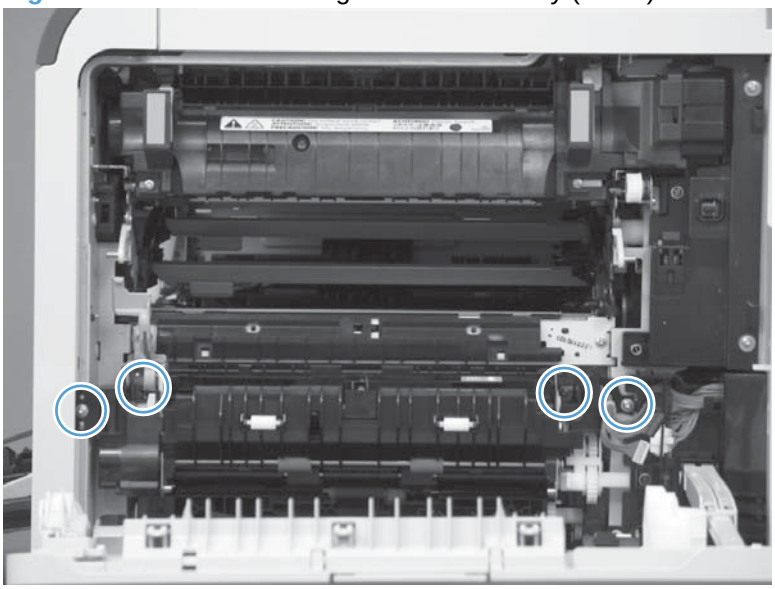

6. Release two pins and the front of the assembly.

Figure 2-94 Remove the registration assembly (7 of 8)

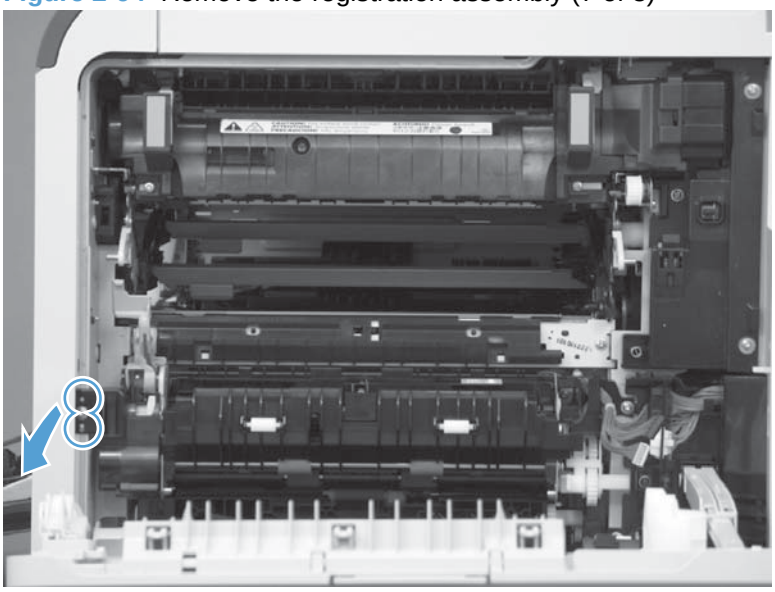

7. Remove the assembly from the product.

Reinstallation tip When you reinstall the registration assembly, make sure that it is correctly positioned in the product. The tabs on the assembly must fit into the slots in the product chassis and the assembly fits securely up against the product chassis.

Figure 2-95 Remove the registration assembly (8 of 8)

Residual-toner-feed motor

Before proceeding, remove the following components:

- Intermediate transfer belt (ITB). See Intermediate transfer belt (ITB) on page 92.
- Upper-left cover. See Upper-left cover on page 96.

Remove the residual-toner-feed motor

Remove one screw (callout 1), disconnect one connector (callout 2), and them remove the residual-toner-feed motor (callout 3).

Reinstallation tip When the motor (callout 3) is reinstalled, make sure that the keyed shaft on the product and motor component are correctly aligned and engaged.

Figure 2-96 Remove the residual-toner-feed motor

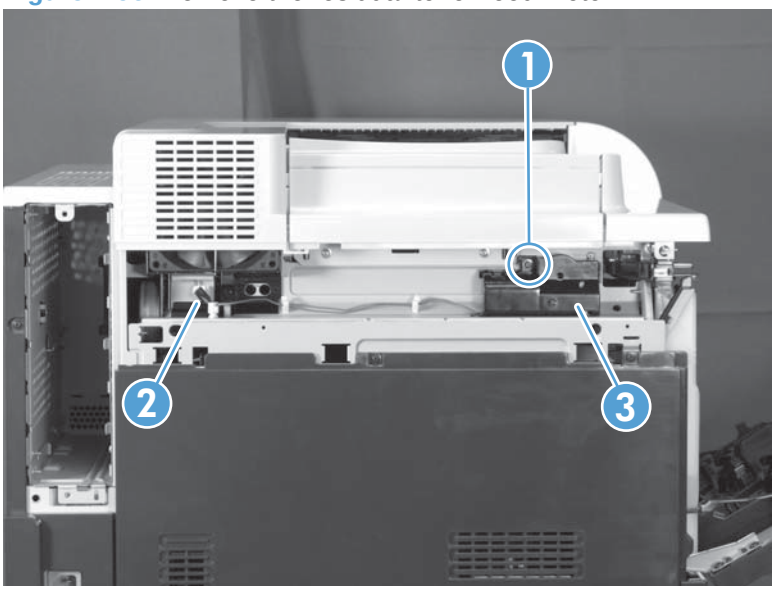

Residual-toner duct and feed assembly

Before proceeding, remove the following components:

- Toner-collection unit. See Toner-collection unit on page 76.
- Intermediate transfer belt (ITB). See Intermediate transfer belt (ITB) on page 92.
- Upper-left cover. See Upper-left cover on page 96.
- Residual-toner-feed motor. See Residual-toner-feed motor on page 133.

Remove the residual-toner duct and feed assembly

1. Remove one screw.

Figure 2-97 Remove the residual-toner duct and feed assembly (1 of 4)

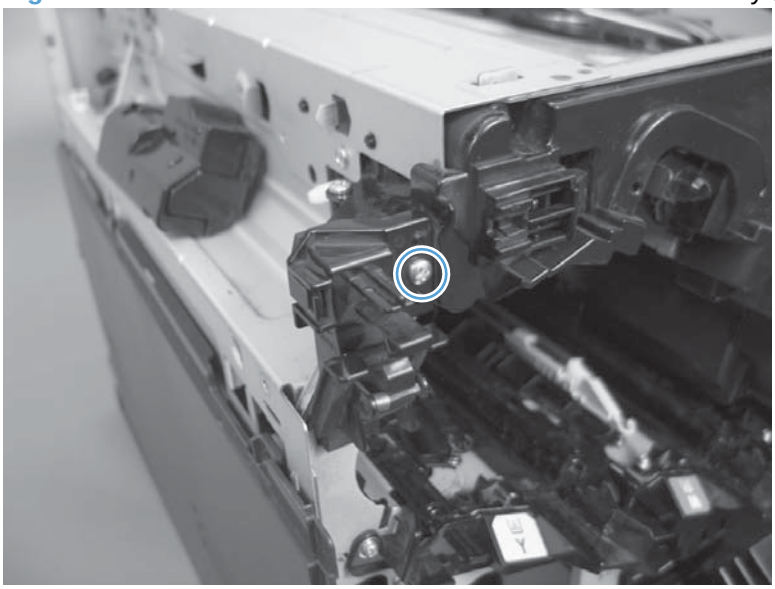

2. Release one tab, and then remove the waste toner duct.

Figure 2-98 Remove the residual-toner duct and feed assembly (2 of 4)

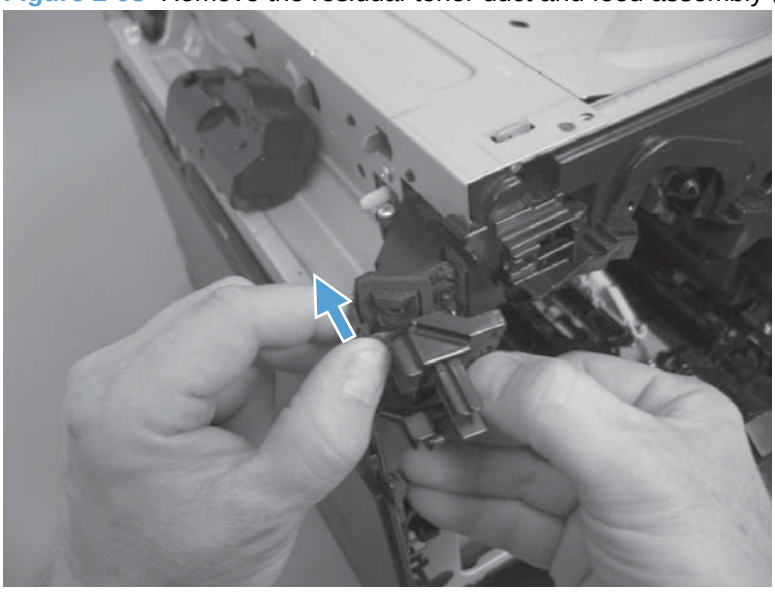

3. Remove one screw.

Figure 2-99 Remove the residual-toner duct and feed assembly (3 of 4)

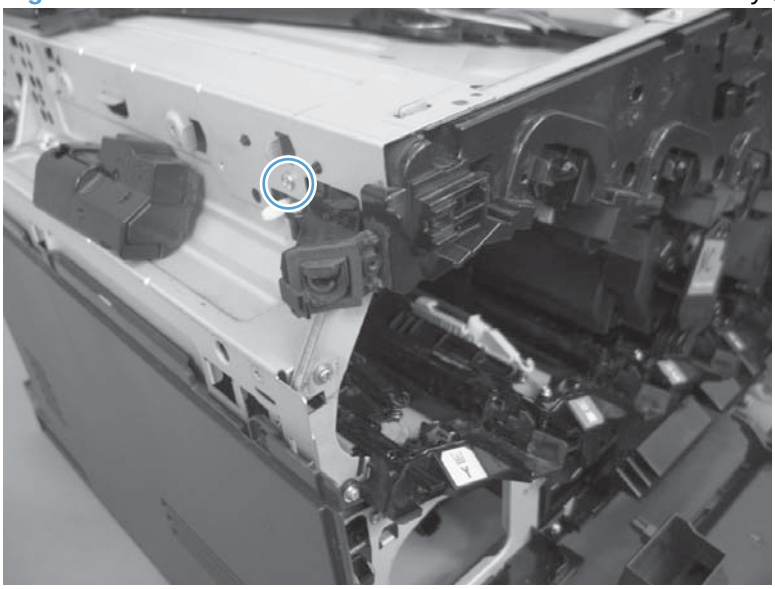

4. Push the residual-toner feed assembly into the product and then remove through the print cartridge cavity.

△ **CAUTION:** The waste toner feed assembly contains toner. Place a cloth below the work area to catch any spilled toner.

Figure 2-100 Remove residual-toner duct and feed assembly (4 of 4)

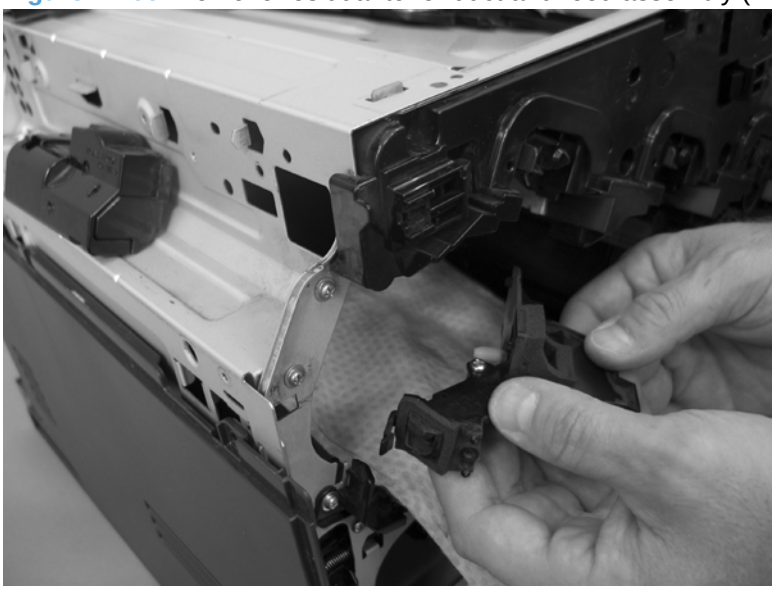

Cartridge fan and environmental sensor

Before proceeding, remove the following components:

- Upper-left cover. See Upper-left cover on page 96.
- Power-supply cover. See Power-supply cover on page 98.
- Left cover. See Left cover on page 99.

Remove the cartridge fan and environmental sensor

1. Remove four screws (callout 1), and then remove the sheet-metal plate (callout 2).

   Figure 2-101 Remove the cartridge fan and environmental sensor (1 of 7)

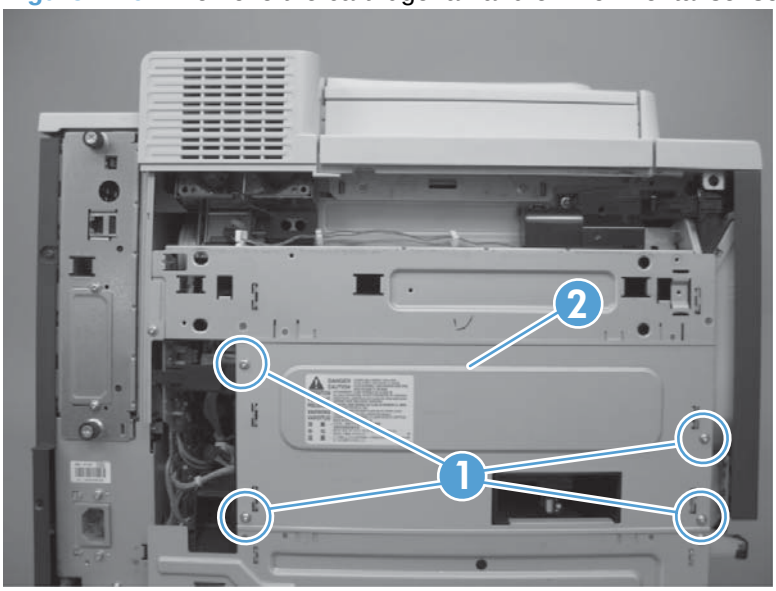

2. Release one spring.

TIP: Close the front-door assembly to reduce tension in the spring.

Figure 2-102 Remove the cartridge fan and environmental sensor (2 of 7)

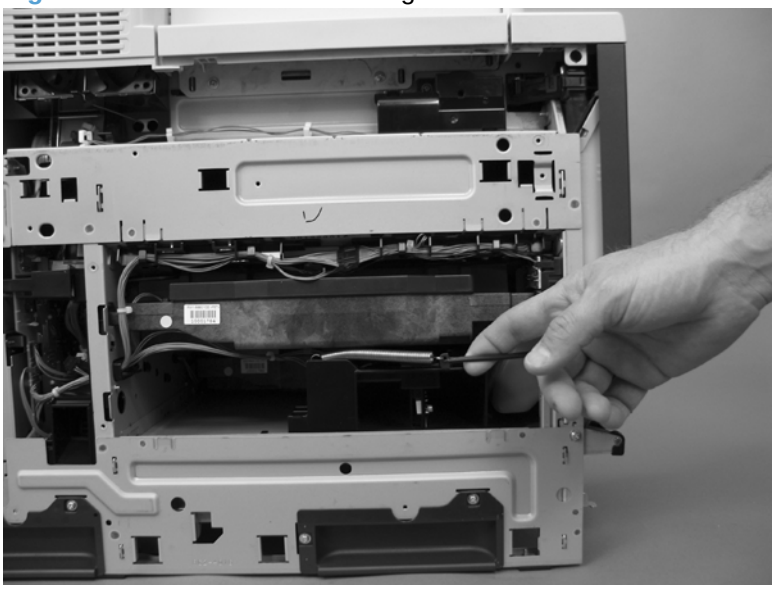

3. Release one tab and then slide the fan assembly toward the back of the product.

Figure 2-103 Remove the cartridge fan and environmental sensor (3 of 7)

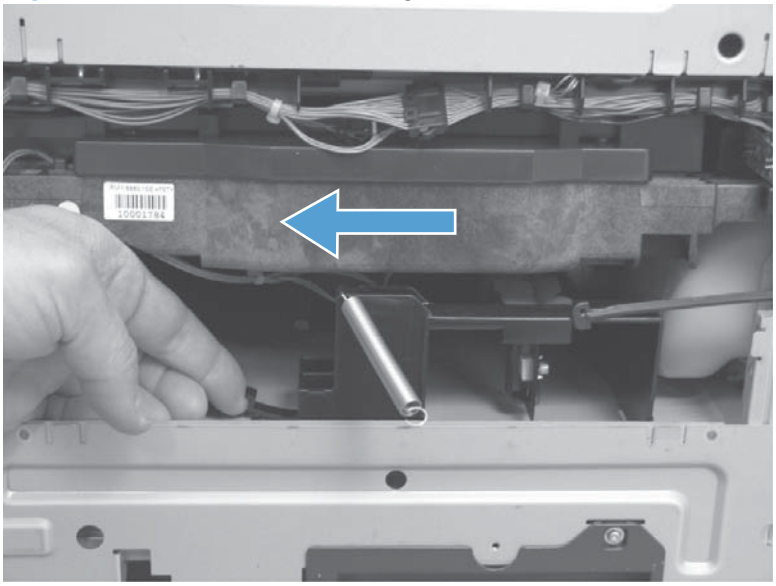

4. Pull the fan assembly out of the product, and then disconnect two connectors.

TIP: One connector is below the sponge.

Figure 2-104 Remove the cartridge fan and environmental sensor (4 of 7)

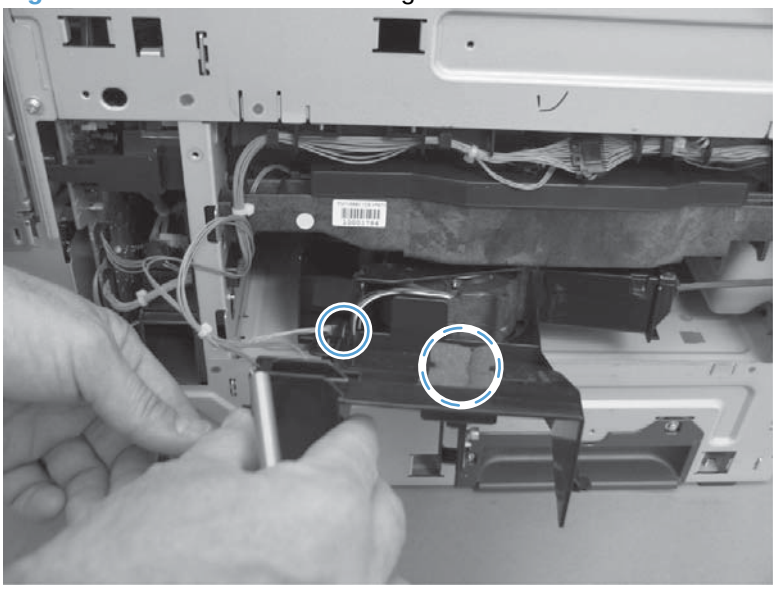

5. Release two tabs (callout 1), and then remove the cover (callout 2).

Figure 2-105 Remove the cartridge fan and environmental sensor (5 of 7)

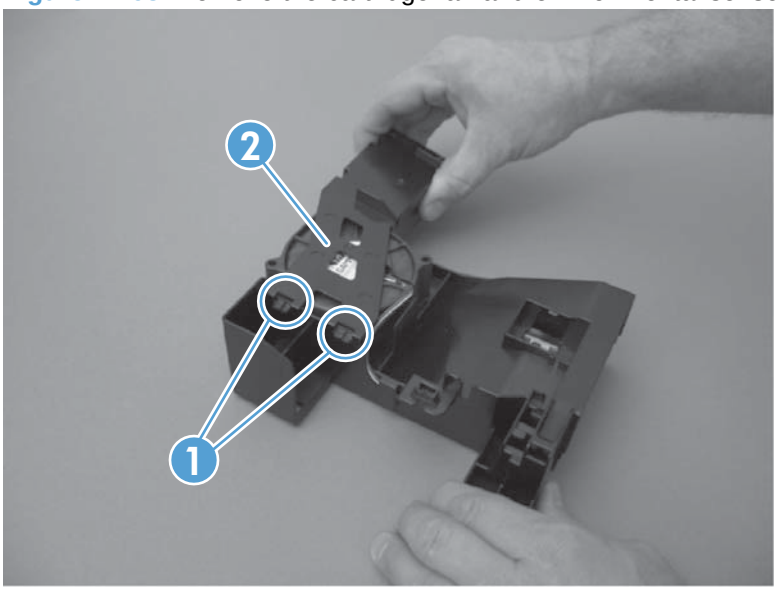

6. Disconnect one connector (callout 1), and then remove the fan (callout 2).

Figure 2-106 Remove the cartridge fan and environmental sensor (6 of 7)

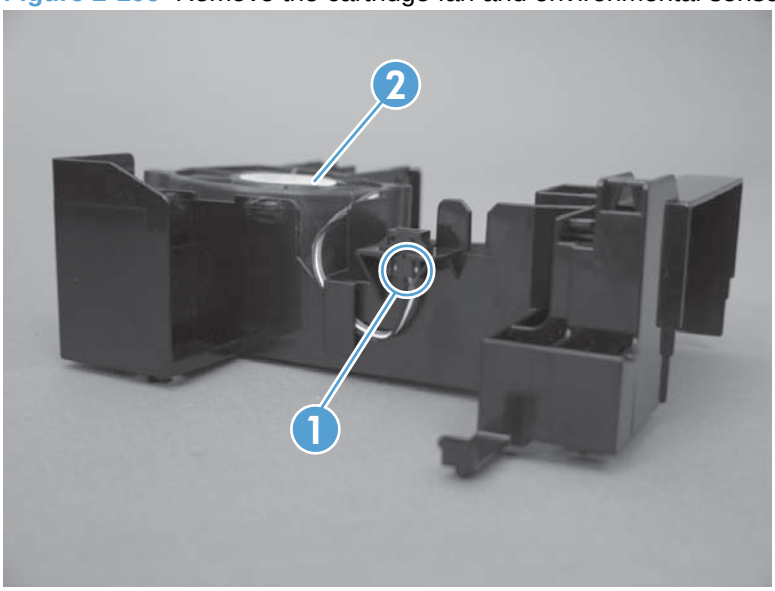

7. Carefully release one tab, and then remove the environmental sensor.

△ **CAUTION:** ESD-sensitive part.

Figure 2-107 Remove the cartridge fan and environmental sensor (7 of 7)

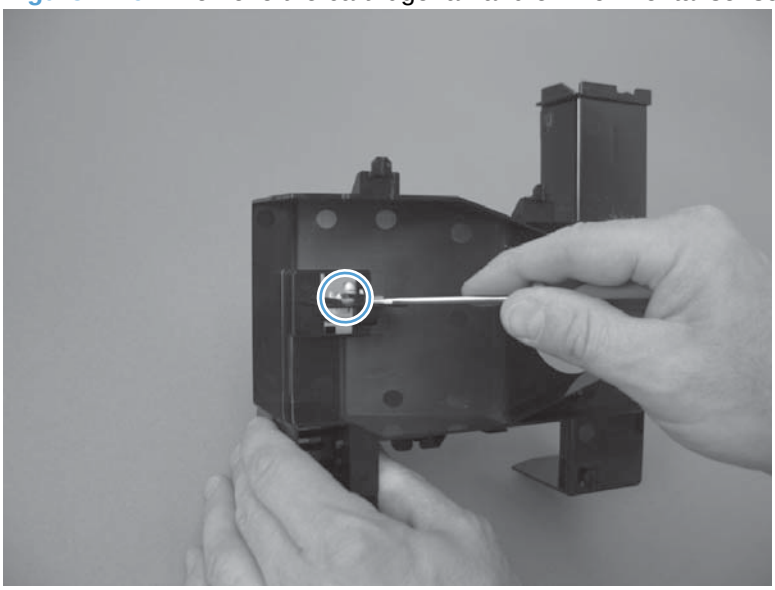

Toner-collection sensor and scanner-thermistor assembly

Before proceeding, remove the following components:

- Toner-collection unit. See Toner-collection unit on page 76.
- Upper-left cover. See Upper-left cover on page 96.
- Power-supply cover. See Power-supply cover on page 98.
- Left cover. See Left cover on page 99.

Remove the toner-collection sensor and scanner-thermistor assembly

1. Remove four screws (callout 1), and then remove the sheet-metal plate (callout 2).

   Figure 2-108 Remove the toner-collection sensor and scanner-thermistor assembly (1 of 3)

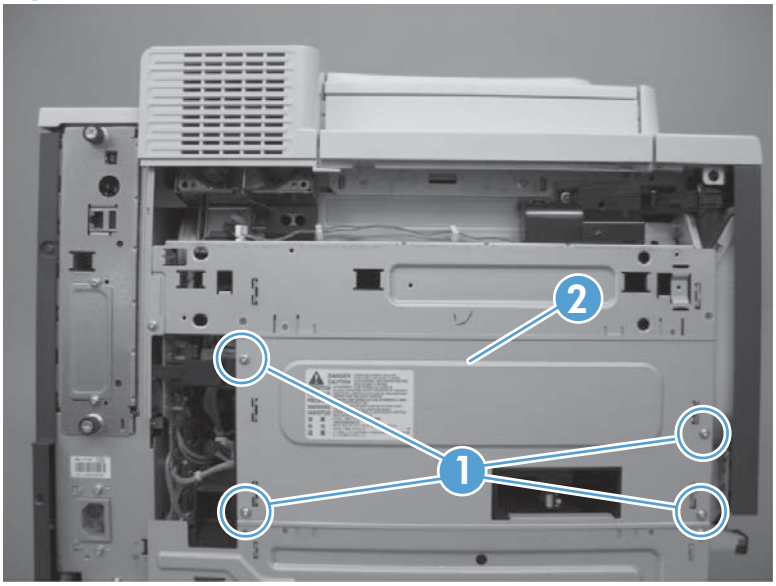

2. Open the front-door assembly, and then remove one screw.

Figure 2-109 Remove the toner-collection sensor and scanner-thermistor assembly (2 of 3)

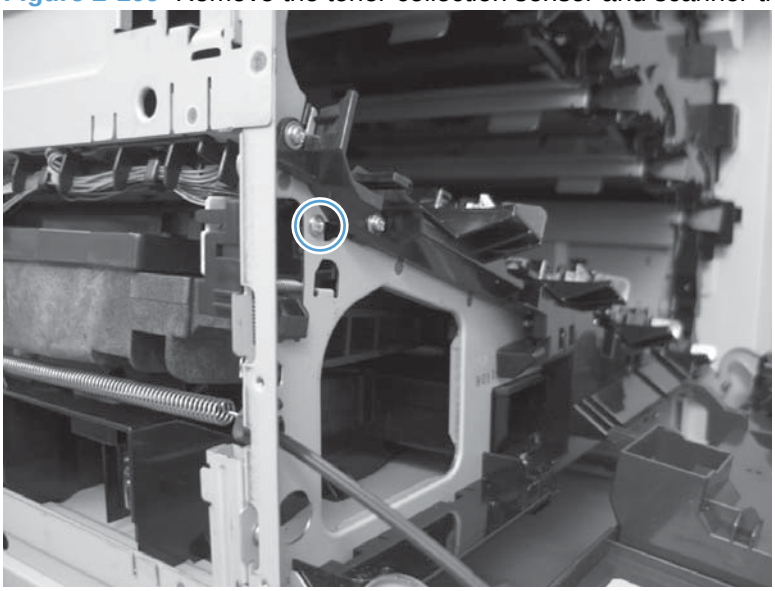

3. Disconnect two connectors (callout 1), and then remove the toner-collection sensor and scanner-thermistor assembly (callout 2).

Figure 2-110 Remove the toner-collection sensor and scanner-thermistor assembly (3 of 3)

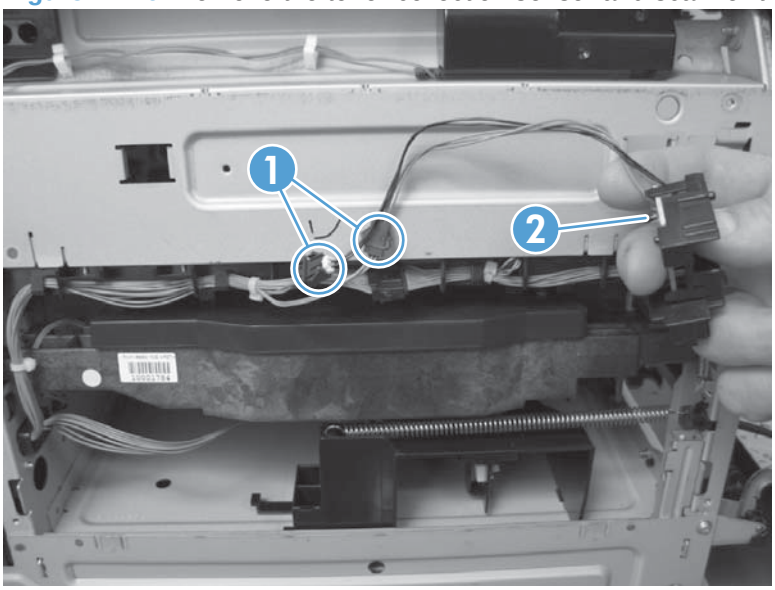

Delivery fan

Before proceeding, remove the following components:

- Upper-left cover. See Upper-left cover on page 96.
- Front-top cover. See Front-top cover on page 100.
- Rear-top cover. See Rear-top cover on page 102.

Remove the delivery fan

1. Remove one screw (callout 1), disconnect one connector (callout 2), and release one wire retainer (callout 3).

   Figure 2-111 Remove the delivery fan (1 of 2)

   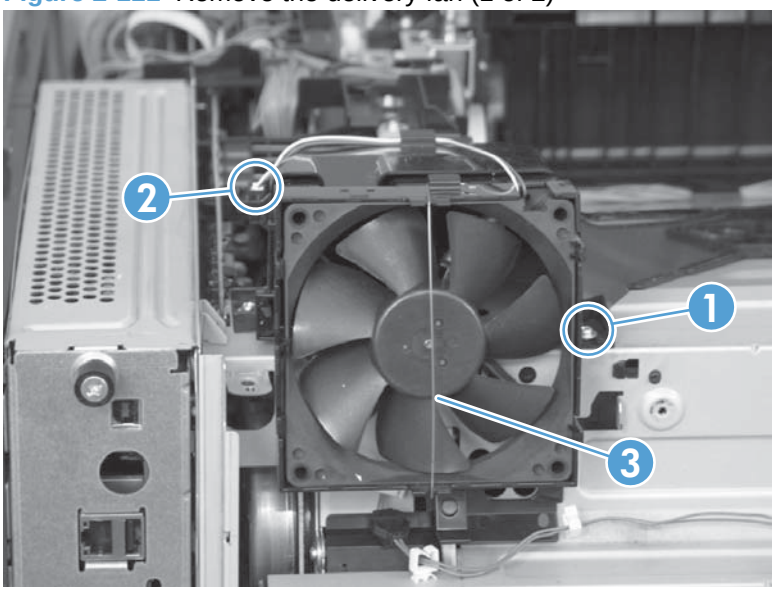

   TIP: When the fan is reinstalled, the air must flow into the product. Check the arrows embossed on the fan frame that indicate air flow direction.

2. Release one tab (callout 1), and then remove the delivery fan (callout 2).

Figure 2-112 Remove the delivery fan (2 of 2)

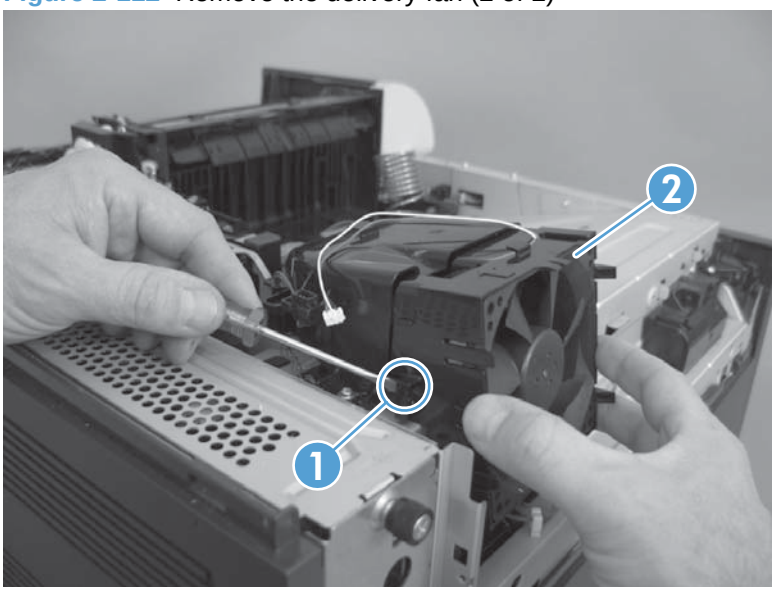

Delivery assembly

Before proceeding, remove the following components:

- Fuser. See Fuser on page 85.
- Intermediate transfer belt (ITB). See Intermediate transfer belt (ITB) on page 92.
- Upper-left cover. See Upper-left cover on page 96.
- Power-supply cover. See Power-supply cover on page 98.
- Front-top cover. See Front-top cover on page 100.
- Rear-top cover. See Rear-top cover on page 102.
- Right-front cover. See Right-front cover on page 103.
- Control-panel assembly. See Control-panel assembly on page 105
- Delivery fan. See Delivery fan on page 143.

Remove the delivery assembly

1. Remove one screw (callout 1), and disconnect one connector (callout 2), and then slide the fan duct (callout 3) to release it from the delivery assembly.

NOTE: Do not remove the fan duct from the product.

Figure 2-113 Remove the delivery assembly (1 of 7)

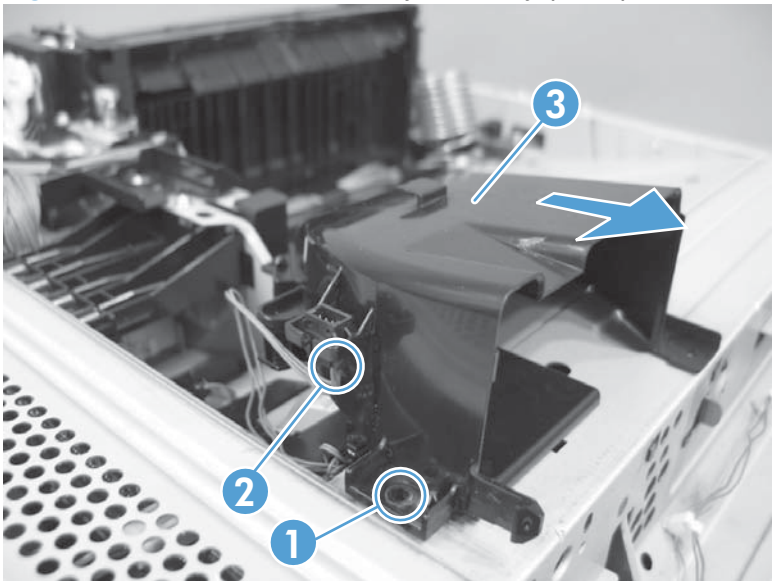

2. Remove two screws (callout 1), and then remove the paper guide (callout 2).

NOTE: Duplex models only: press the duplex solenoid (callout 3) to create enough clearance to remove the paper guide (callout 2).

TIP: The fuser delivery sensor is installed on the rear of the paper guide. Leave the sensor attached to the guide, and rotate the paper guide toward the rear of the product to access the delivery assembly.

Figure 2-114 Remove the delivery assembly (2 of 7)

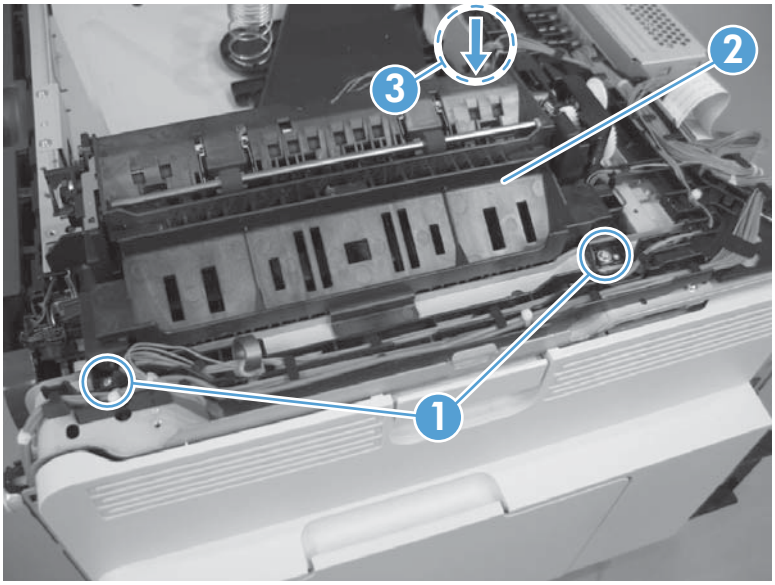

3. Release the wire harness from the guides (callout 1), and then disconnect one connector (callout 2).

Figure 2-115 Remove the delivery assembly (3 of 7)

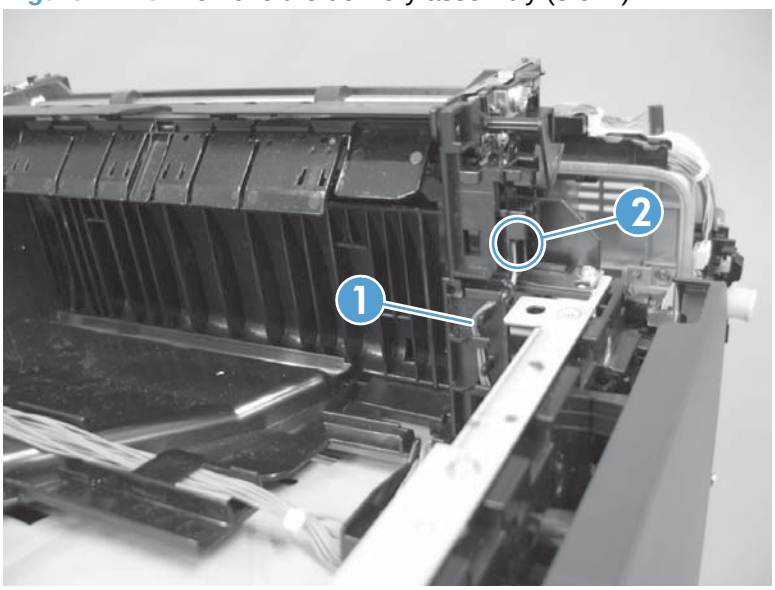

4. Remove two screws.

Figure 2-116 Remove the delivery assembly (4 of 7)

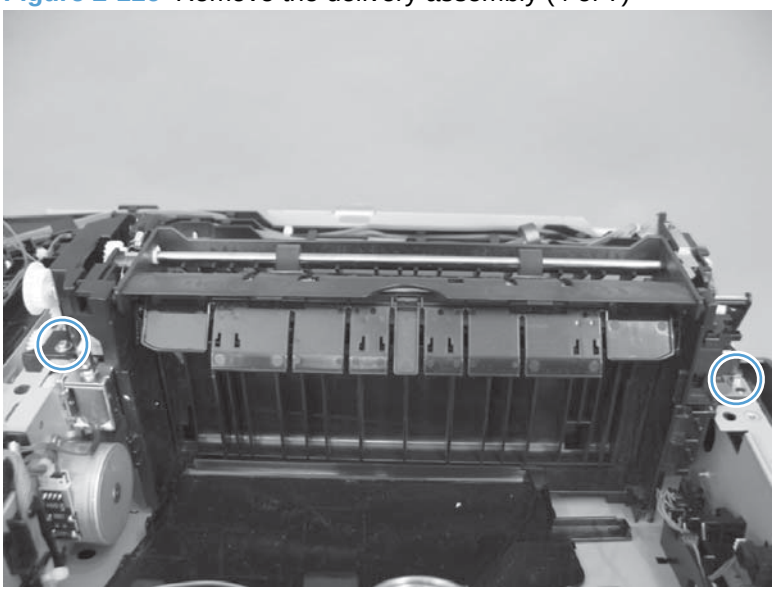

5. Pull one tab out, and then push the tab down to release the bushing.

Figure 2-117 Remove the delivery assembly (5 of 7)

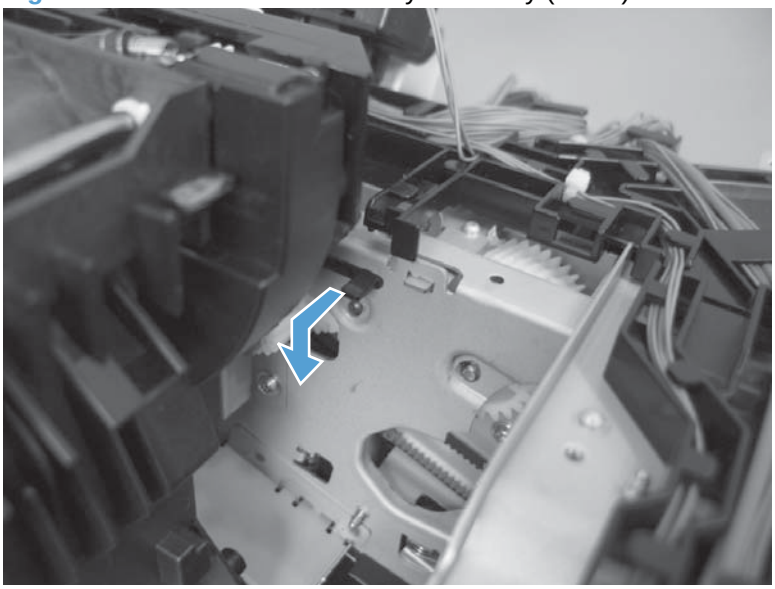

6. Remove two screws.

Figure 2-118 Remove the delivery assembly (6 of 7)

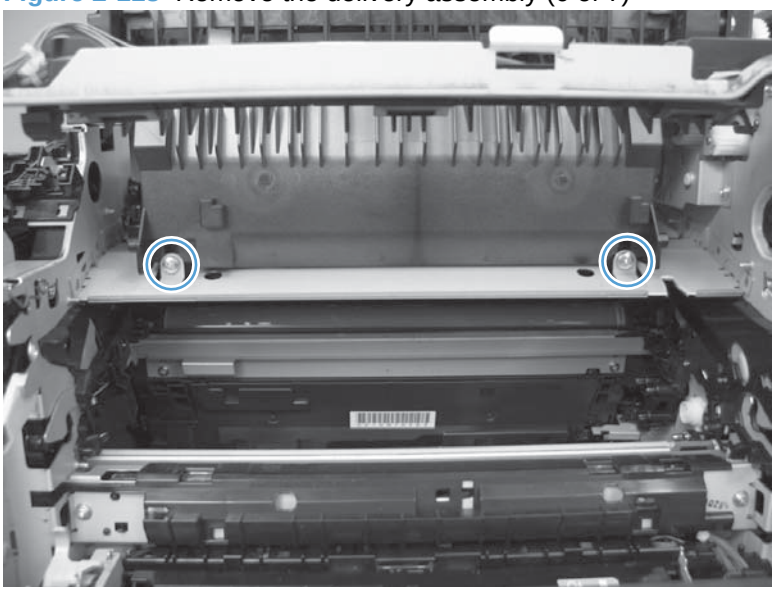

7. Remove the assembly.

Figure 2-119 Remove the delivery assembly (7 of 7)

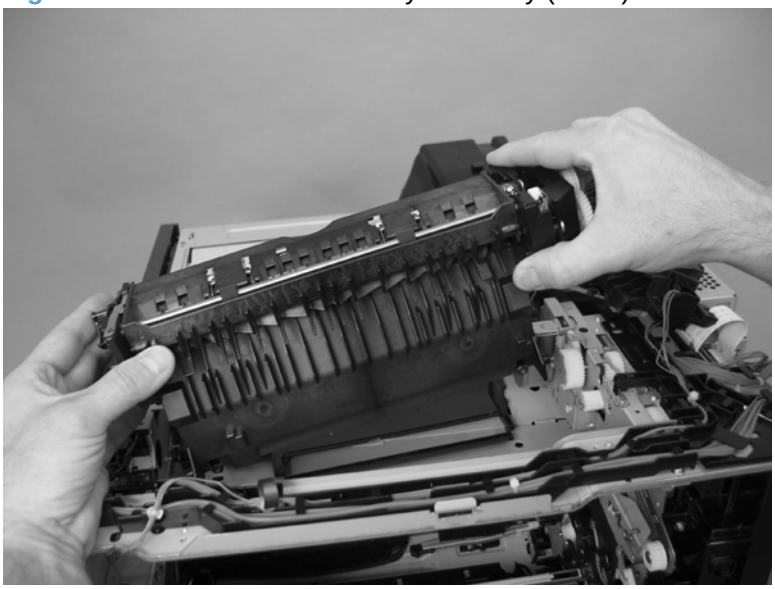

Reinstall the delivery assembly

NOTE: For duplex models, the solenoid plunger must be removed from the discarded assembly, and then installed on the replacement assembly. For all models, the output-bin full sensor must be removed from the discarded assembly, and then installed on the replacement assembly.

1. **Duplex models only**: Make sure that the solenoid plunger is correctly installed on the replacement assembly.

   Figure 2-120 Reinstall the delivery assembly (1 of 4)

   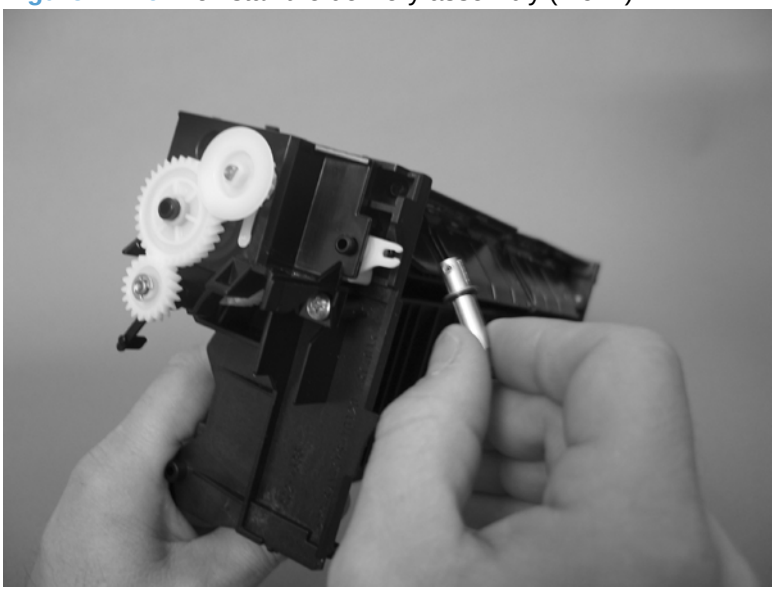

2. **For all models**: Do the following.

   a. The output-bin full sensor is held in place on the delivery assembly by one tab and two hooks (callout 1).

   Figure 2-121 Reinstall the delivery assembly (2 of 4)

   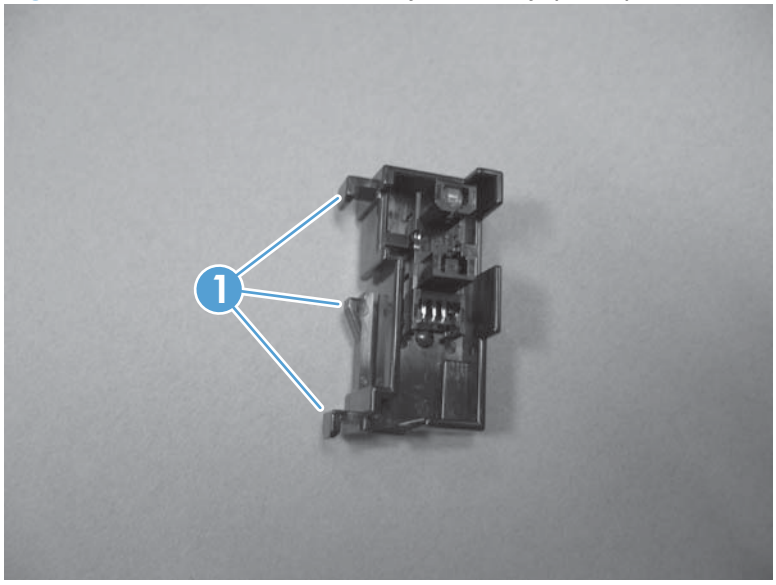

b. Hold the delivery assembly with the diverter (callout 1) in the depressed position to move the sensor flag (callout 2) away from the sensor. Release one tab (callout 3).

Figure 2-122 Reinstall the delivery assembly (3 of 4)

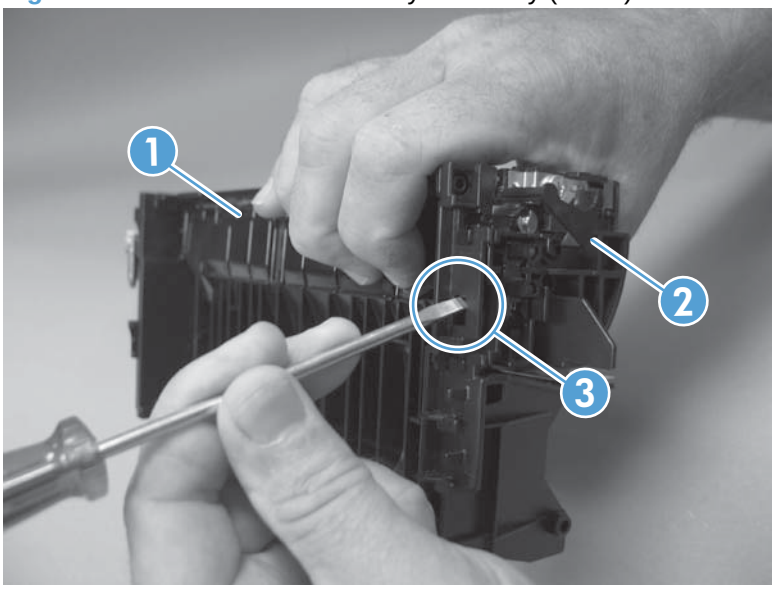

c. Slide the sensor up toward the top of the delivery assembly to release two hooks (callout 1), and then carefully remove the sensor from the assembly.

△ **CAUTION:** Do not damage the sensor holder or sensor flag when removing the sensor from the delivery assembly.

Figure 2-123 Reinstall the delivery assembly (4 of 4)

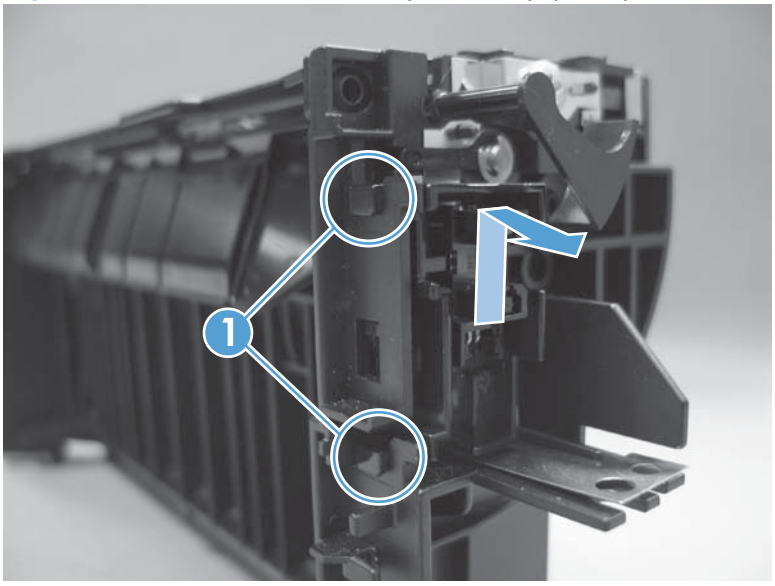

Duplex-drive assembly

Before proceeding, remove the following components:

- Fuser. See Fuser on page 85.
- Intermediate transfer belt (ITB). See Intermediate transfer belt (ITB) on page 92.
- Upper-left cover. See Upper-left cover on page 96.
- Power-supply cover. See Power-supply cover on page 98.
- Front-top cover. See Front-top cover on page 100.
- Rear-top cover. See Rear-top cover on page 102.
- Right-front cover. See Right-front cover on page 103.
- Control-panel assembly. See Control-panel assembly on page 105.
- Delivery fan. See Delivery fan on page 143.
- Delivery assembly. See Delivery assembly on page 145.

Remove the duplex-drive assembly

▲ Disconnect two connectors (callout 1), remove three screws (callout 2), and then remove the assembly (callout 3).

Figure 2-124 Remove the duplex-drive assembly

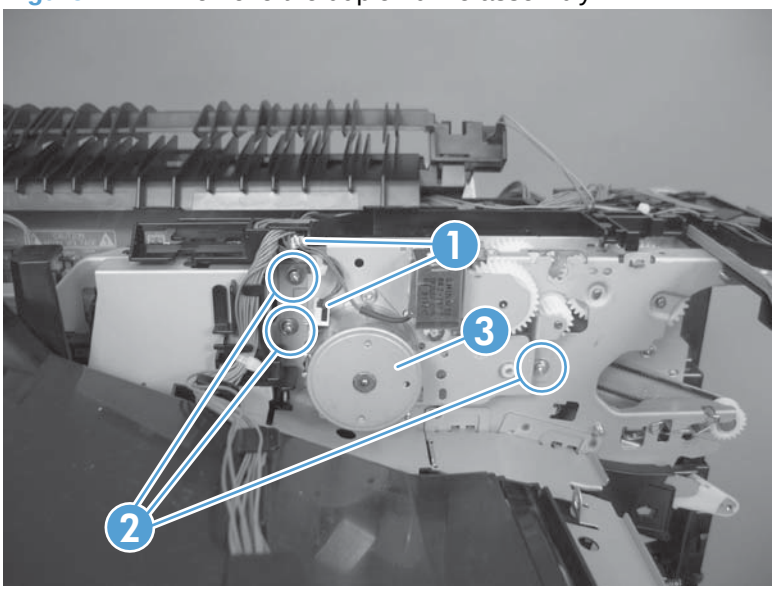

Power-supply fan

Before proceeding, remove the following components:

- Upper-left cover. See Upper-left cover on page 96.
- Power-supply cover. See Power-supply cover on page 98.
- Front-top cover. See Front-top cover on page 100.
- Rear-top cover. See Rear-top cover on page 102.
- Right-rear cover. See Right-rear cover on page 110.
- Rear cover. See Rear cover on page 112.

Remove the power-supply fan

▲ Release two tabs, and then remove the fan from the fan duct.

Reinstallation tip When the fan is reinstalled, the air must flow into the product. Check the arrows embossed on the fan frame that indicate air flow direction.

Figure 2-125 Remove the power-supply fan

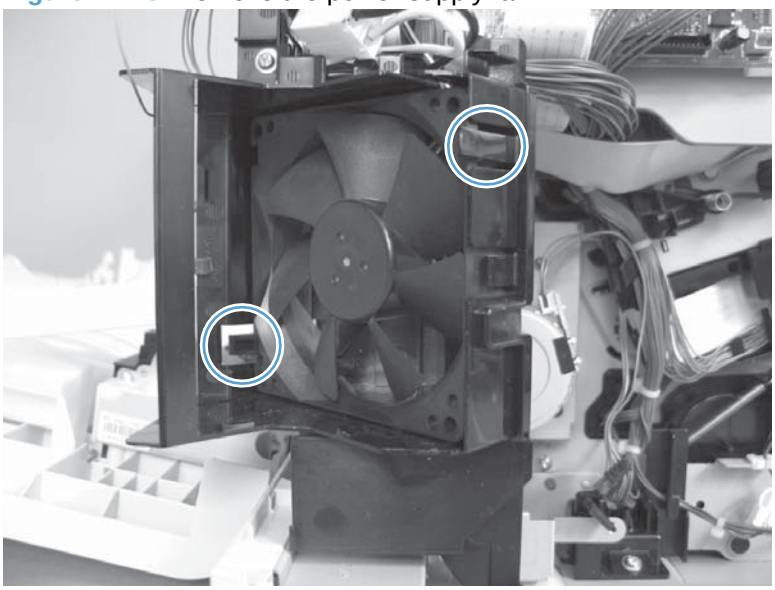

Interconnect board (ICB)

Before proceeding, remove the following components:

- Formatter. See Formatter PCA on page 78.
- Upper-left cover. See Upper-left cover on page 96.
- Power-supply cover. See Power-supply cover on page 98.
- Front-top cover. See Front-top cover on page 100.
- Rear-top cover. See Rear-top cover on page 102.
- Rear cover. See Rear cover on page 112.

Remove the ICB

⚠ **WARNING!** **Do not** remove the ICB from a product and then install it into a **different** product. Failure to follow this warning will result in severe damage to that product and cause it to be unusable. HP recommends that if you remove and replace the ICB, you should destroy the discarded ICB so that it can not accidentally be installed in a different product.

△ **CAUTION:** ESD-sensitive part.

1. Disconnect two connectors (callout 1), remove two screws (callout 2), and remove the test-button clip (callout 3).

Figure 2-126 Remove the ICB (1 of 2)

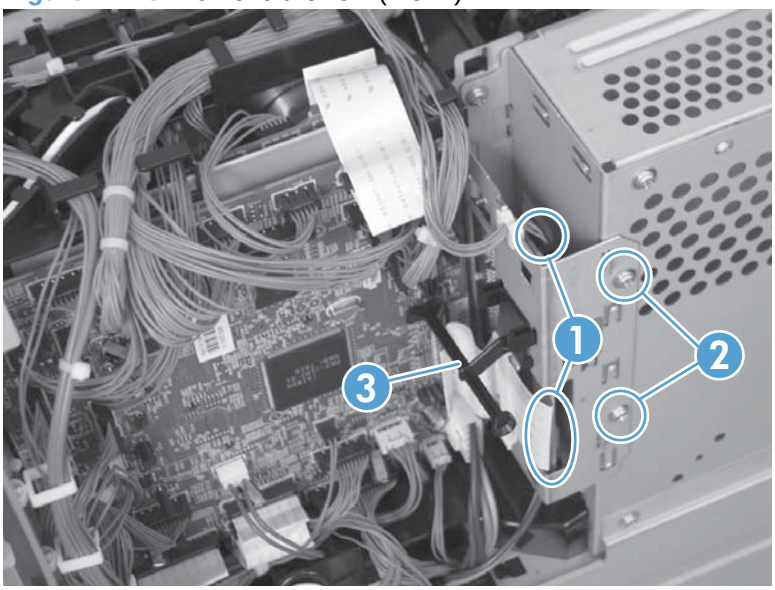

2. Carefully rotate and slide the ICB up and away from the chassis, disconnect one connector, and then remove the ICB.

Figure 2-127 Remove the ICB (2 of 2)

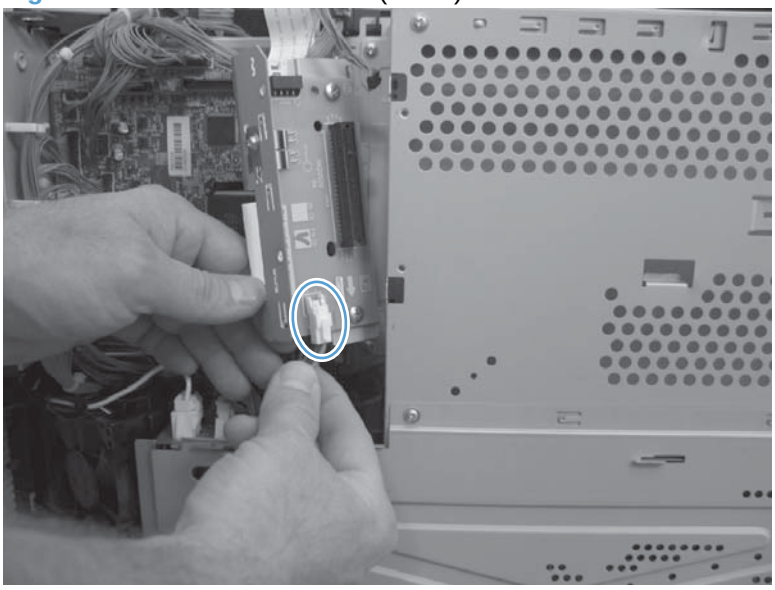

DC controller PCA only

NOTE: Use the following procedure to replace **only** the DC controller PCA. To access components behind the DC controller, remove the PCA and the sheet-metal backing tray. See DC controller PCA and tray on page 161.

Before proceeding, remove the following components:

- Upper-left cover. See Upper-left cover on page 96.
- Power-supply cover. See Power-supply cover on page 98.
- Rear-top cover. See Rear-top cover on page 102.
- Rear cover. See Rear cover on page 112.
- Interconnect board (ICB). See Interconnect board (ICB) on page 153.

Remove the DC controller PCA only

CAUTION: ESD-sensitive part.

NOTE: To locate DC controller connector locations, see DC controller connector locations on page 281.

1. Disconnect all the connectors. There are 32 connectors in all.

   Reinstallation tip The connector locations J101, J102, J106, and J154 are not used.

Figure 2-128 Remove the DC controller PCA only (1 of 2)

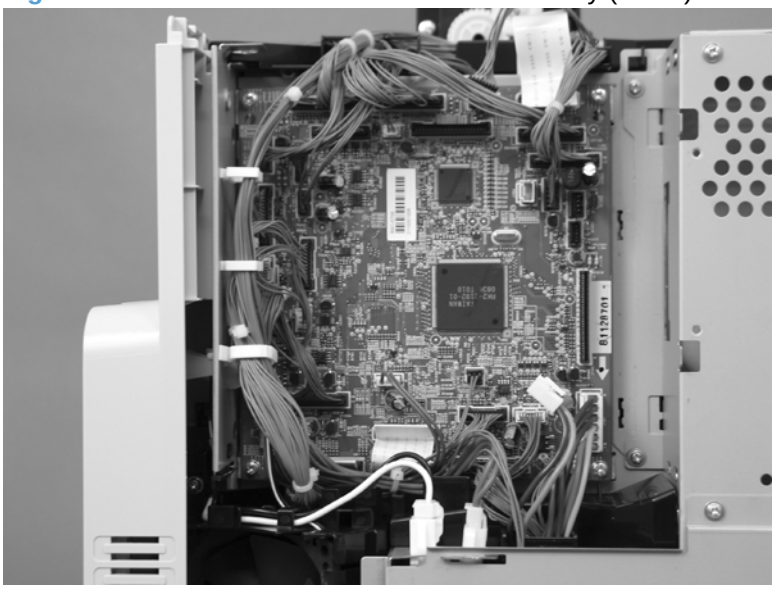

2. Remove four screws (callout 1), and then remove the DC controller PCA.

Figure 2-129 Remove the DC controller PCA only (2 of 2)

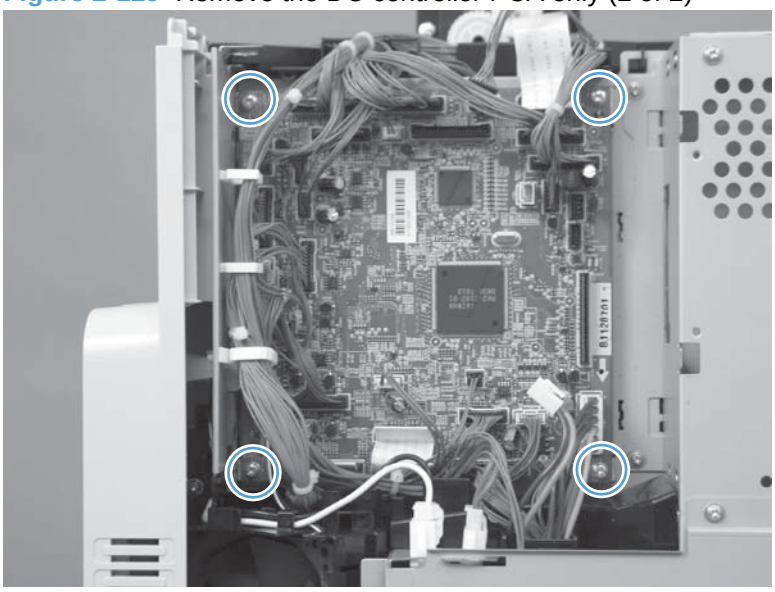

Low-voltage power supply (LVPS)

Before proceeding, remove the following components:

- Formatter. See Formatter PCA on page 78.
- Upper-left cover. See Upper-left cover on page 96.
- Power-supply cover. See Power-supply cover on page 98.
- Left cover. See Left cover on page 99.
- Front-top cover. See Front-top cover on page 100.
- Rear-top cover. See Rear-top cover on page 102.
- Rear cover. See Rear cover on page 112.
- Interconnect board (ICB). See Interconnect board (ICB) on page 153.

NOTE: The formatter cage is attached to the LVPS. Remove both components as an assembly. You can then remove the formatter cage from the LVPS.

Remove the low-voltage power supply

CAUTION: ESD-sensitive part.

1. Remove four screws, and then slide the sheet-metal plate toward the back of the product to remove.

Figure 2-130 Remove the low-voltage power supply (1 of 6)

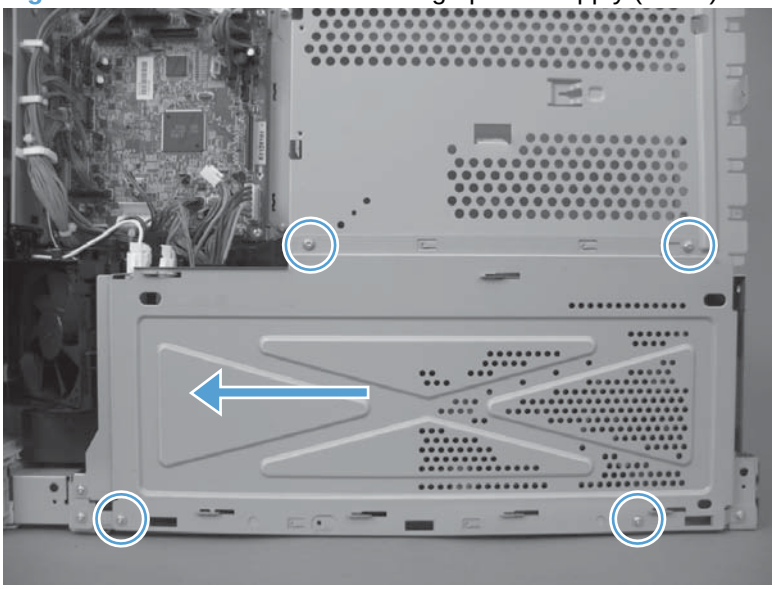

2. Disconnect five connectors, and then release the wire harnesses from the guides as necessary.

NOTE: To locate DC controller connector locations, see DC controller connector locations on page 281.

Figure 2-131 Remove the low-voltage power supply (1 of 6)

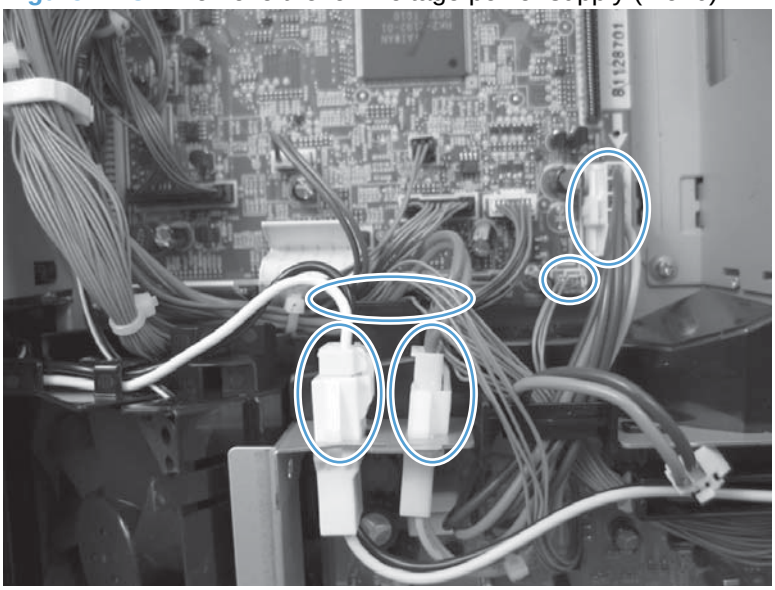

3. Disconnect one connector, and then release the wire harness from the guide.

Reinstallation tip Make sure that you reconnect this connector when the power supply is reinstalled.

Figure 2-132 Remove the low-voltage power supply (2 of 6)

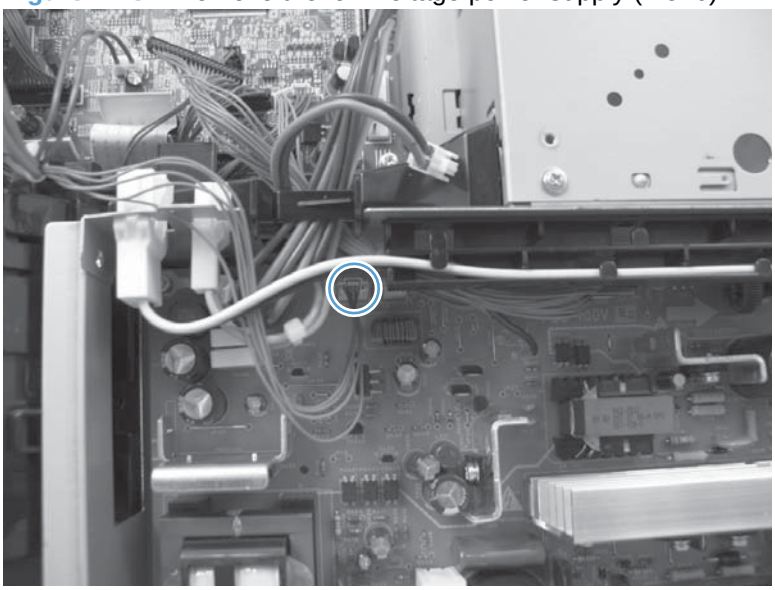

4. Remove three screws.

Figure 2-133 Remove the low-voltage power supply (3 of 6)

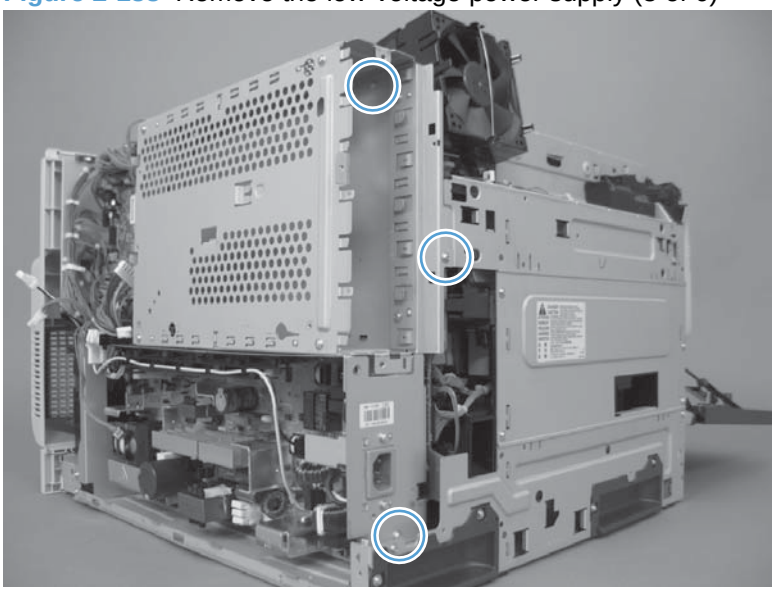

5. Remove three screws.

Reinstallation tip When the low-voltage power supply is reinstalled, make sure the tab on the mounting bracket behind the bottom screw (callout 1), is inserted in the slot in the product chassis. When correctly installed, the mounting bracket must be flat against the product chassis.

Figure 2-134 Remove the low-voltage power supply (4 of 6)

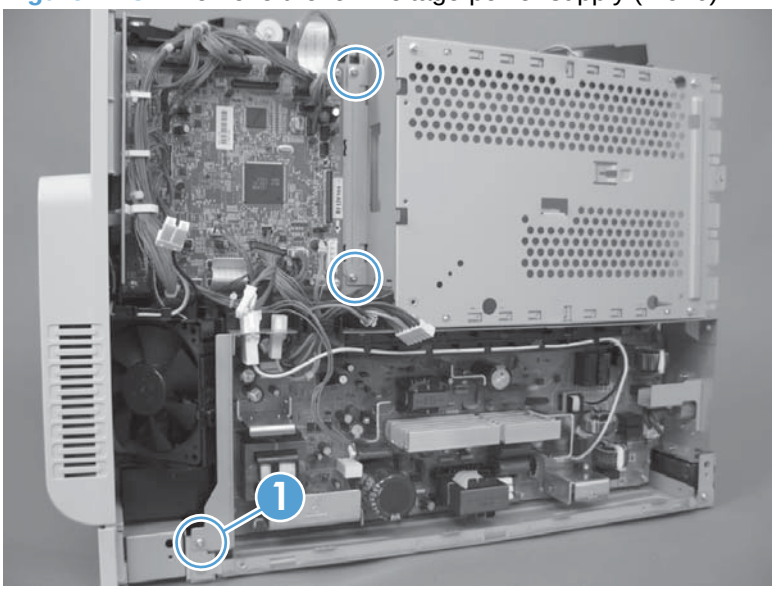

6. Slide the bottom of the assembly away from the product, tip the top of the assembly away from the product, and then remove the assembly.

Figure 2-135 Remove the low-voltage power supply (5 of 6)

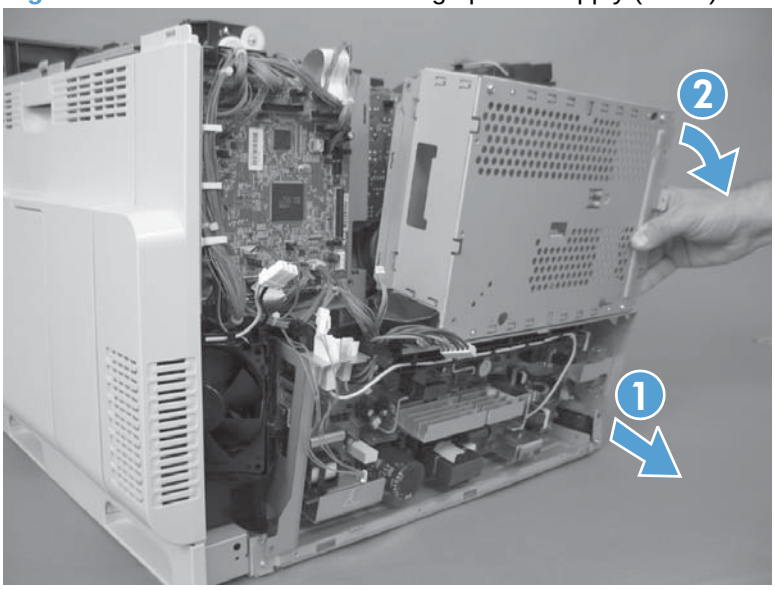

7. Place the assembly on a flat surface. Remove two screws (callout 1), and then separate the formatter cage (callout 2) from the low-voltage power supply (callout 3).

NOTE: If you are removing the power supply for internal product access, you can leave the formatter cage installed on the power supply chassis.

Figure 2-136 Remove the low-voltage power supply (6 of 6)

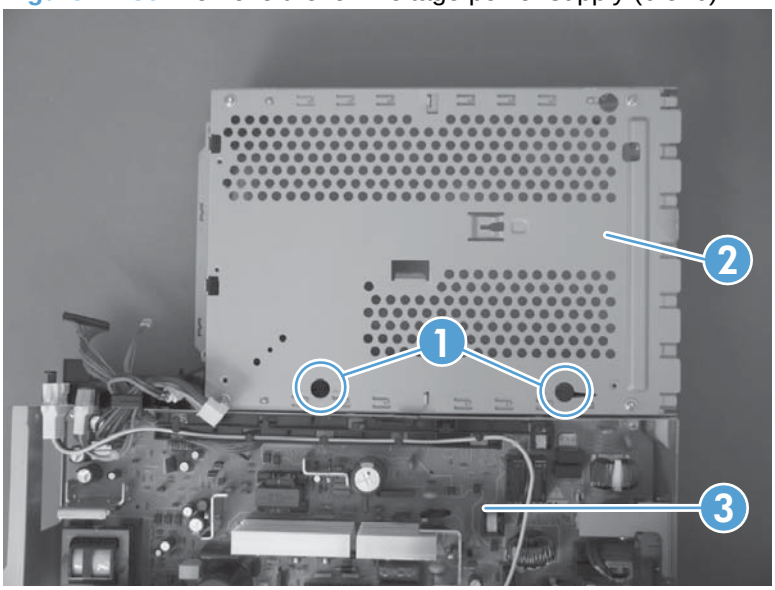

DC controller PCA and tray

Before proceeding, remove the following components:

- Upper-left cover. See Upper-left cover on page 96.
- Power-supply cover. See Power-supply cover on page 98.
- Front-top cover. See Front-top cover on page 100.
- Rear-top cover. See Rear-top cover on page 102.
- Rear cover. See Rear cover on page 112.
- Interconnect board (ICB). See Interconnect board (ICB) on page 153.
- Low-voltage power supply. See Low-voltage power supply (LVPS) on page 157.

Remove the DC controller PCA and tray

CAUTION: ESD-sensitive part.

NOTE: To locate DC controller connector locations, see DC controller connector locations on page 281.

1. Disconnect all the connectors. There are 32 connectors in all.

   Reinstallation tip The connector locations J101, J102, J106, and J154 are not used.

Figure 2-137 Remove the DC controller PCA and tray (1 of 3)

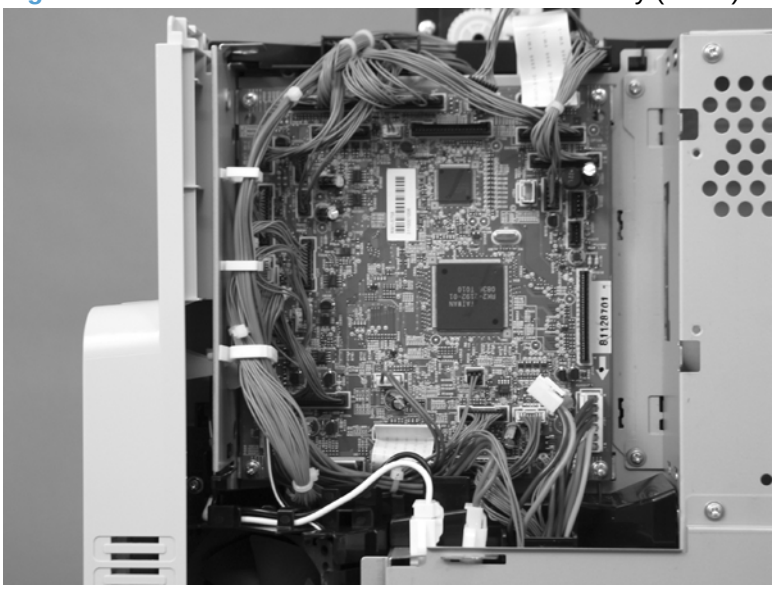

2. Remove two screws.

Figure 2-138 Remove the DC controller PCA and tray (2 of 3)

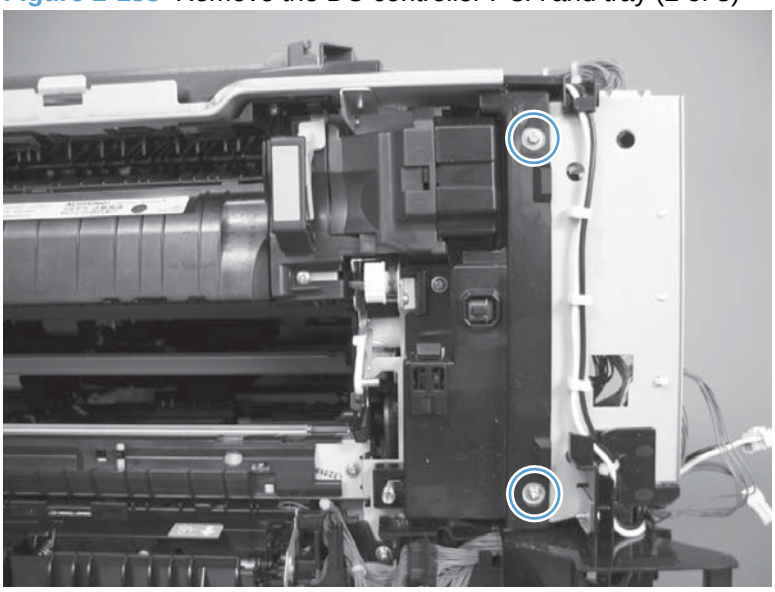

3. Disengage three tabs (two along the left edge of the PCA and one at the top-right corner of the PCA).

Figure 2-139 Remove the DC controller PCA and tray (3 of 3)

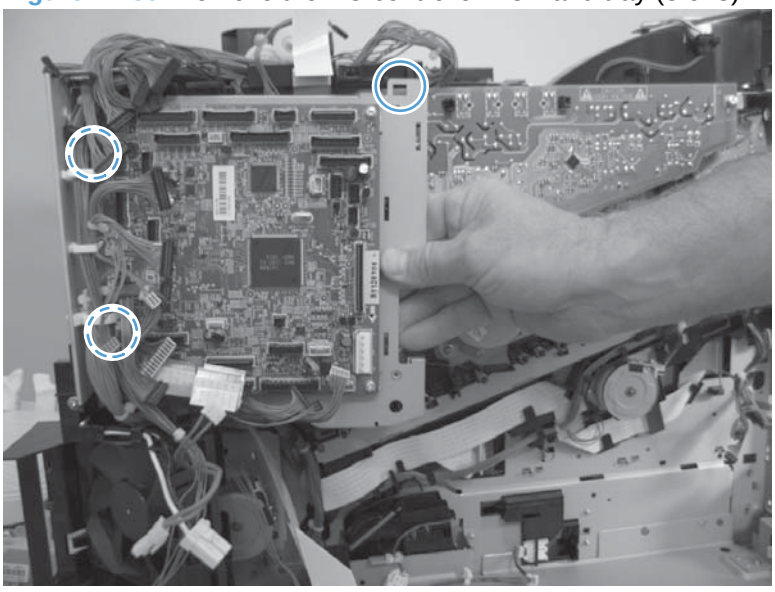

High-voltage power supply lower (HVPS-D)

Before proceeding, remove the following components:

- Formatter. See Formatter PCA on page 78.
- Upper-left cover. See Upper-left cover on page 96.
- Power-supply cover. See Power-supply cover on page 98.
- Left cover. See Left cover on page 99.
- Front-top cover. See Front-top cover on page 100.
- Rear-top cover. See Rear-top cover on page 102.
- Rear cover. See Rear cover on page 112.
- Interconnect board (ICB). See Interconnect board (ICB) on page 153.
- Low-voltage power supply. See Low-voltage power supply (LVPS) on page 157.

Remove the high-voltage power supply lower

△ **CAUTION:** ESD-sensitive part.

1. Disconnect three connectors.

Figure 2-140 Remove the high-voltage power supply lower (1 of 7)

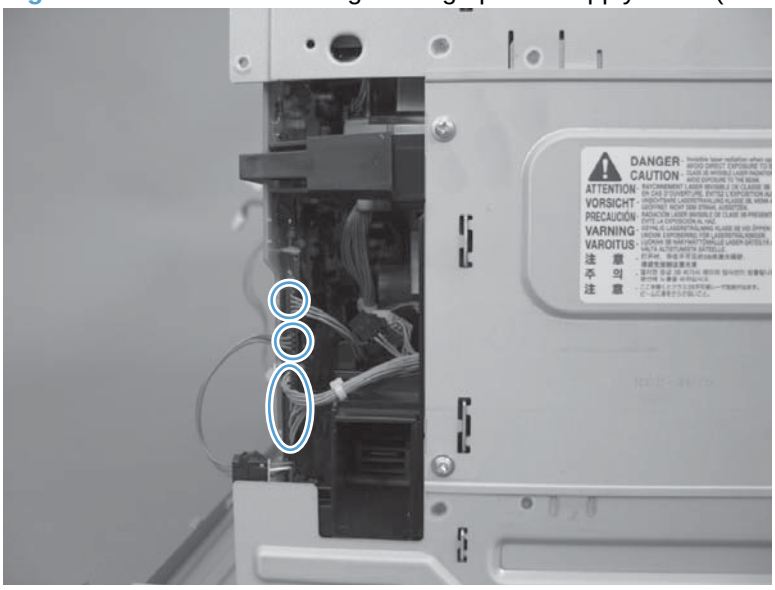

2. Remove three screws.

Figure 2-141 Remove the high-voltage power supply lower (2 of 7)

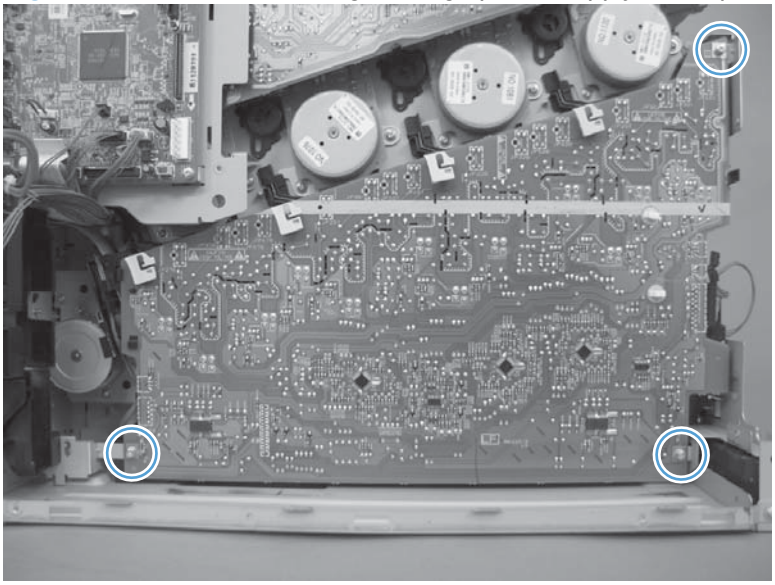

3. Release four locking clips.

NOTE: Squeeze each locking clip to remove.

Figure 2-142 Remove the high-voltage power supply lower (3 of 7)

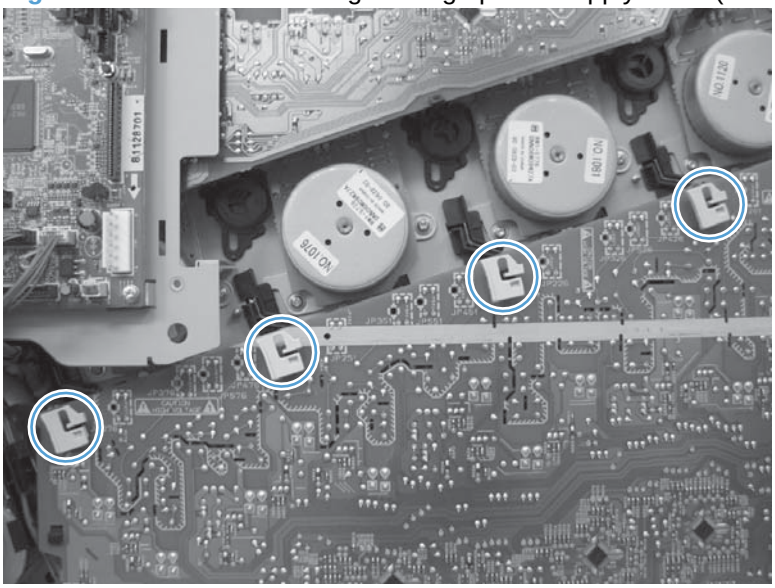

Figure 2-143 Remove the high-voltage power supply lower (4 of 7)

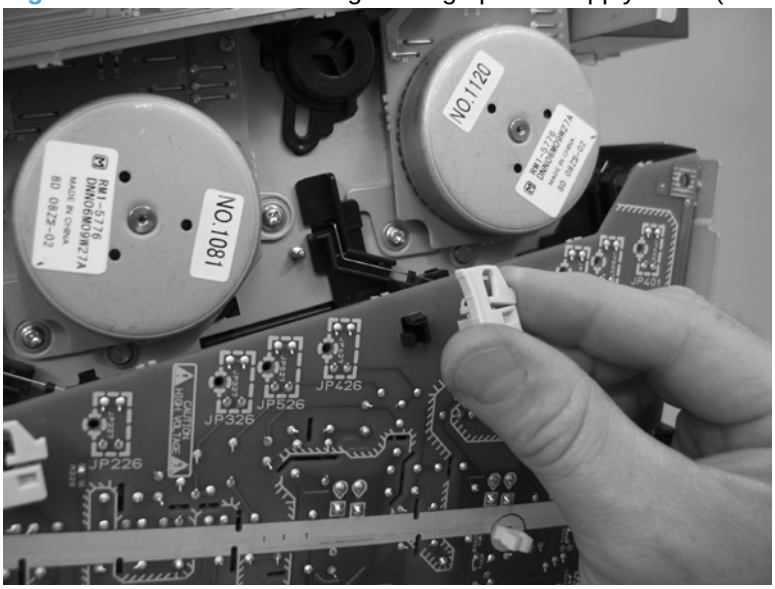

4. Release five tabs.

Figure 2-144 Remove the high-voltage power supply lower (5 of 7)

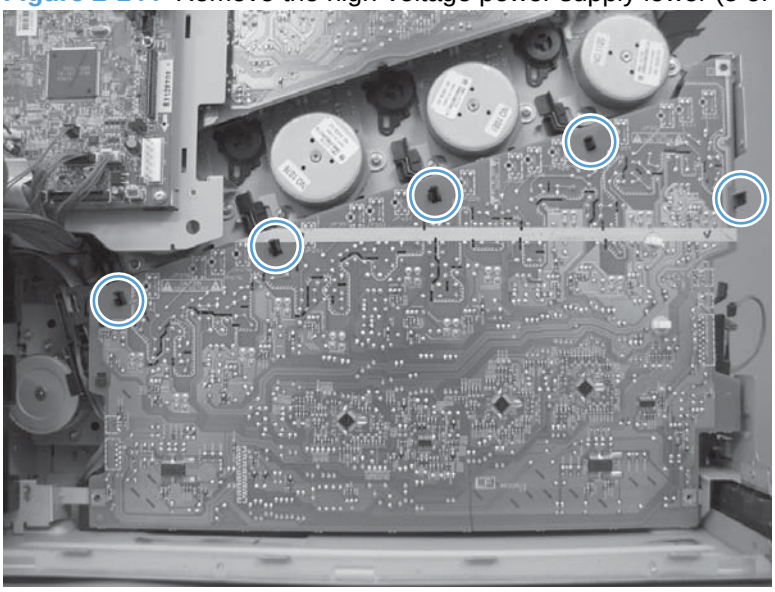

5. Rotate the top of the power supply away from the chassis, and then disconnect two connectors on the back of the power supply.

NOTE: Remove the FFC (callout 1) with the high-voltage power supply PCA. Do not disconnect this FFC.

Figure 2-145 Remove the high-voltage power supply lower (6 of 7)

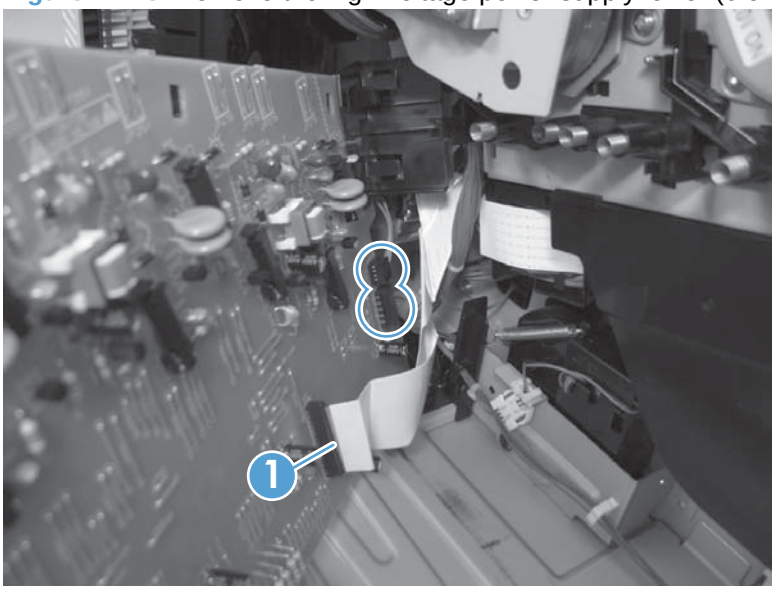

6. Disconnect one FFC (callout 1). Release **only** the wire harnesses from the guide (callout 2) and then remove the power supply.

NOTE: Remove the FFC (callout 1) and guide (callout 2) with the PCA. Replacement high-voltage power supply PCAs have the FFC and guide installed.

Figure 2-146 Remove the high-voltage power supply lower (7 of 7)

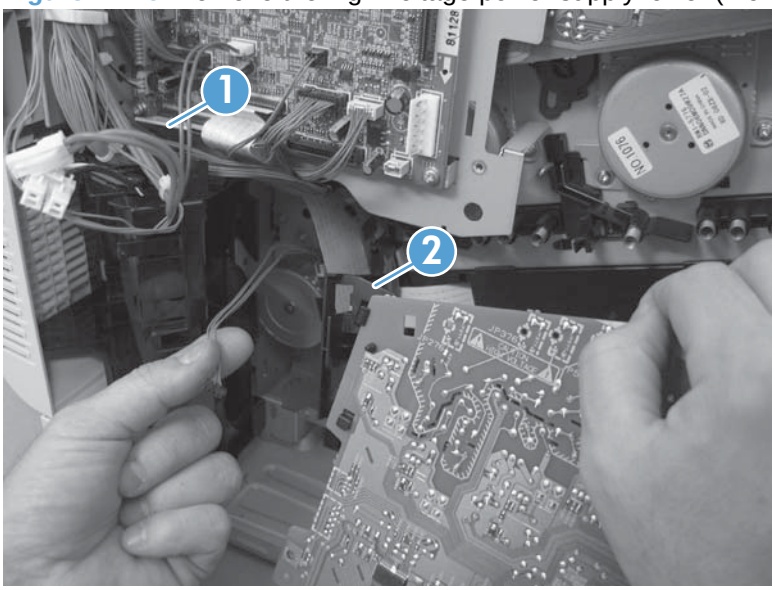

Reinstall the high-voltage power supply lower

When you reinstall the power supply, look through the holes in the PCA and make sure that the high-voltage contact springs are correctly seated against the PCA.

Figure 2-147 Reinstall the high-voltage power supply lower

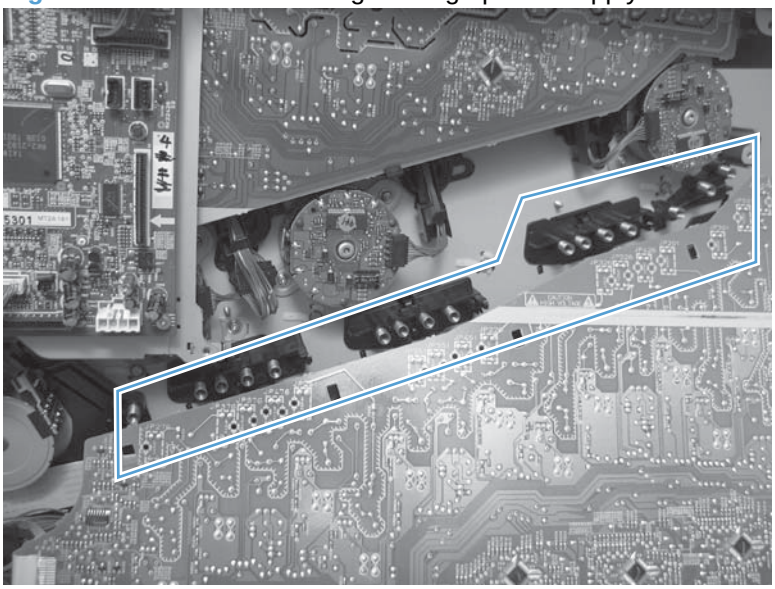

Developing-disengagement motor

Before proceeding, remove the following components:

- Formatter. See Formatter PCA on page 78.
- Upper-left cover. See Upper-left cover on page 96.
- Power-supply cover. See Power-supply cover on page 98.
- Left cover. See Left cover on page 99.
- Front-top cover. See Front-top cover on page 100.
- Rear-top cover. See Rear-top cover on page 102.
- Rear cover. See Rear cover on page 112.
- Interconnect board (ICB). See Interconnect board (ICB) on page 153.
- Low-voltage power supply. See Low-voltage power supply (LVPS) on page 157.
- High-voltage power supply lower. See High-voltage power supply lower (HVPS-D) on page 163.

Remove the developing-disengagement motor

▲ Remove two screws (callout 1), disconnect one connector (callout 2), and remove the motor.

Figure 2-148 Remove the developing-disengagement motor

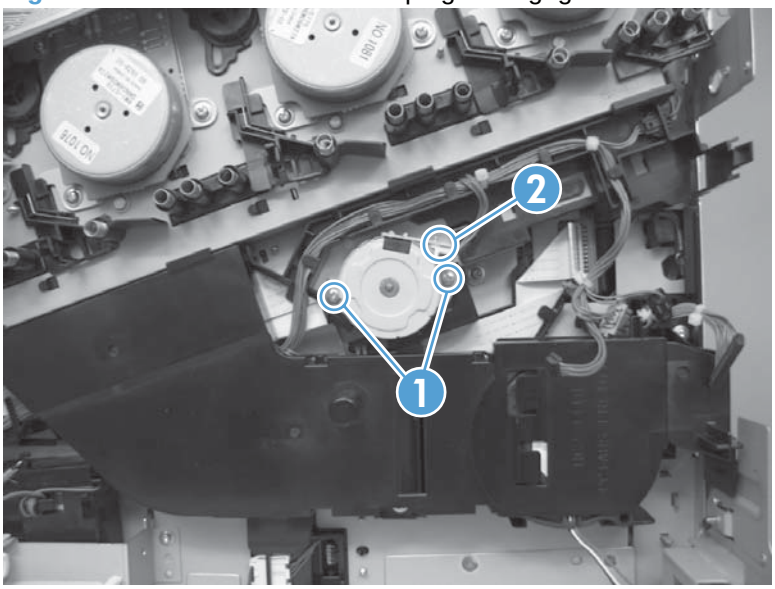

Exhaust fan and fan duct

Before proceeding, remove the following components:

- Formatter. See Formatter PCA on page 78.
- Upper-left cover. See Upper-left cover on page 96.
- Power-supply cover. See Power-supply cover on page 98.
- Left cover. See Left cover on page 99.
- Front-top cover. See Front-top cover on page 100.
- Rear-top cover. See Rear-top cover on page 102.
- Rear cover. See Rear cover on page 112.
- Interconnect board (ICB). See Interconnect board (ICB) on page 153.
- Low-voltage power supply. See Low-voltage power supply (LVPS) on page 157.
- High-voltage power supply lower. See High-voltage power supply lower (HVPS-D) on page 163.

Remove the exhaust fan and fan duct

1. Remove two screws (callout 1), disconnect two connectors (callout 2), and then remove the exhaust fan and duct (callout 3) from the product.

Figure 2-149 Remove the exhaust fan and fan duct (1 of 3)

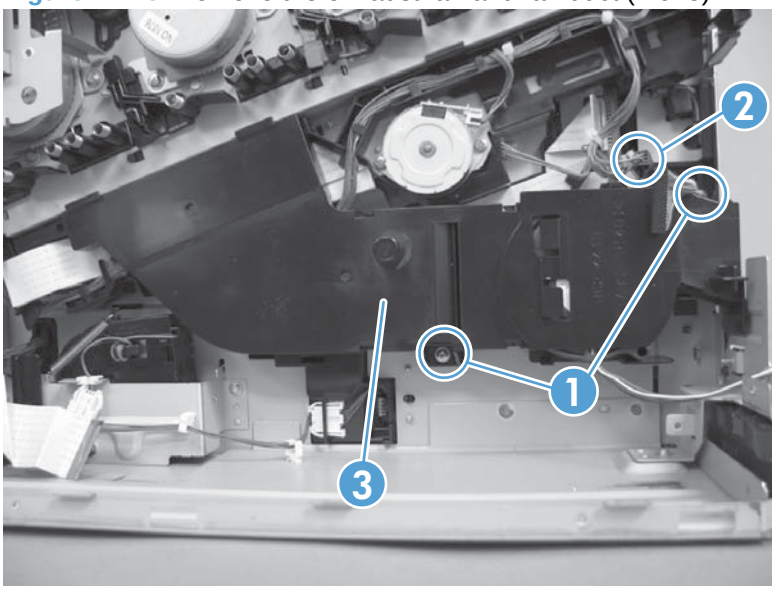

2. Release five tabs (callout 1) and remove the cover (callout 2).

Figure 2-150 Remove the exhaust fan and fan duct (2 of 3)

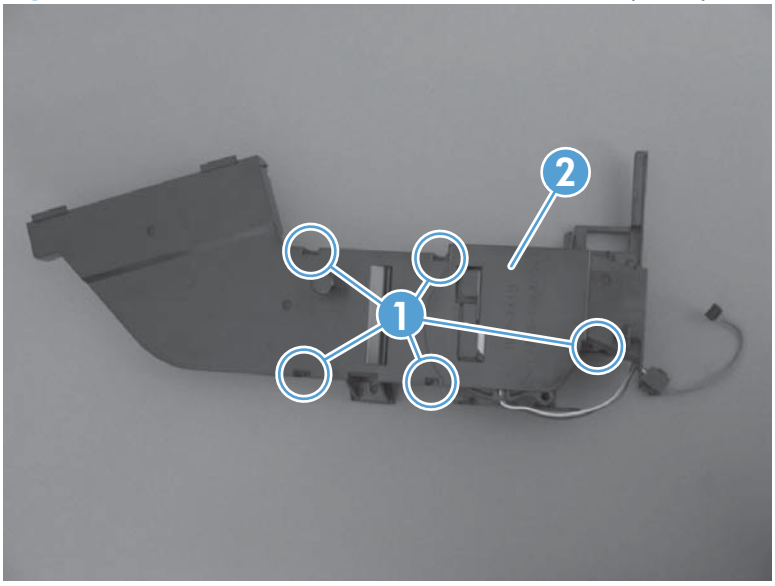

3. Disconnect one connector, and then remove the fan from the duct.

Figure 2-151 Remove the exhaust fan and fan duct (3 of 3)

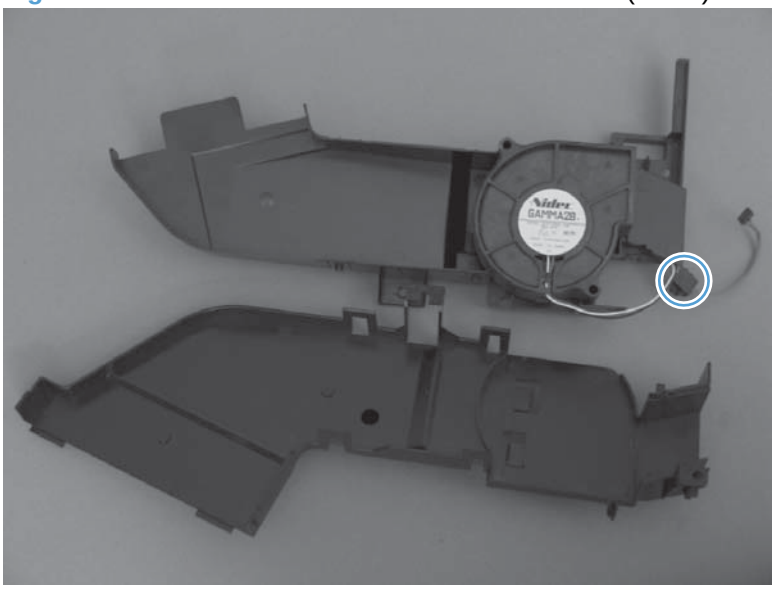

Reinstall the exhaust fan and fan duct

Be sure that the toroid (callout 1) is correctly aligned in the FFC cable guide before attempting to reinstall the exhaust fan and duct.

Figure 2-152 Reinstall the exhaust fan and fan duct

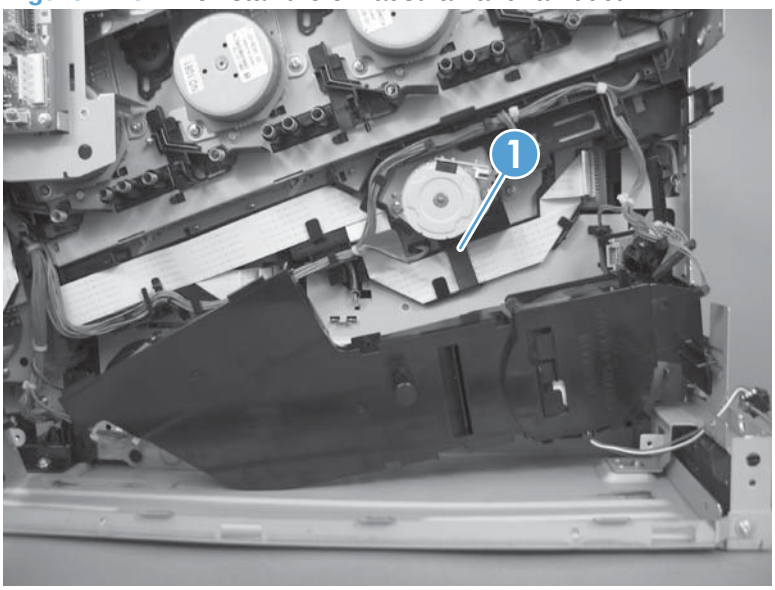

Pickup motor

Before proceeding, remove the following components:

- Formatter. See Formatter PCA on page 78.
- Upper-left cover. See Upper-left cover on page 96.
- Power-supply cover. See Power-supply cover on page 98.
- Left cover. See Left cover on page 99.
- Front-top cover. See Front-top cover on page 100.
- Rear-top cover. See Rear-top cover on page 102.
- Rear cover. See Rear cover on page 112.
- Right-rear cover. See Right-rear cover on page 110.
- Power-supply fan. See Power-supply fan on page 152
- Interconnect board (ICB). See Interconnect board (ICB) on page 153.
- Low-voltage power supply. See Low-voltage power supply (LVPS) on page 157.

Remove the pickup motor

Remove two screws (callout 1), disconnect one connector (callout 2), and then remove the motor (callout 3).

Figure 2-153 Remove the pickup motor

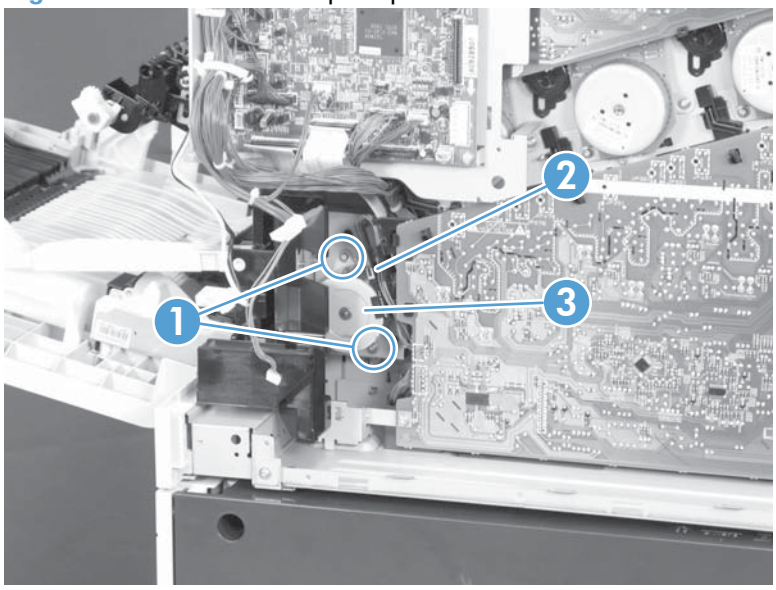

Lifter-drive assembly

Before proceeding, remove the following components:

- Formatter. See Formatter PCA on page 78.
- Intermediate transfer belt (ITB). See Intermediate transfer belt (ITB) on page 92.
- Upper-left cover. See Upper-left cover on page 96.
- Power-supply cover. See Power-supply cover on page 98.
- Left cover. See Left cover on page 99.
- Front-top cover. See Front-top cover on page 100.
- Rear-top cover. See Rear-top cover on page 102.
- Rear cover. See Rear cover on page 112.
- Interconnect board (ICB). See Interconnect board (ICB) on page 153.
- Low-voltage power supply. See Low-voltage power supply (LVPS) on page 157.
- High-voltage power supply lower. See High-voltage power supply lower (HVPS-D) on page 163.

Remove the lifter-drive assembly

1. Remove one screw (callout 1), and then move the accessory-tray connector (callout 2) to access the screw behind it.

Reinstallation tip If the product is installed on the optional paper feeder, you must slightly separate the product and the feeder assembly to install this connector. Open the right door on the feeder. Use the blue handle to release the product-accessory lock, and then lift up on the edge of the product to create a slight gap between the product and the accessory.

Figure 2-154 Remove the lifter-drive assembly (1 of 2)

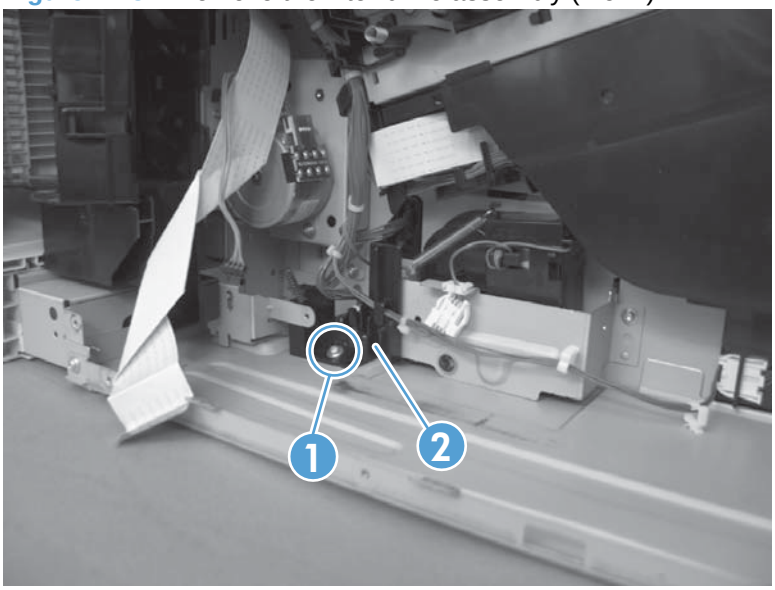

2. Disconnect one connector (callout 1), and then remove two screws (callout 2).

Figure 2-155 Remove the lifter-drive assembly (2 of 3)

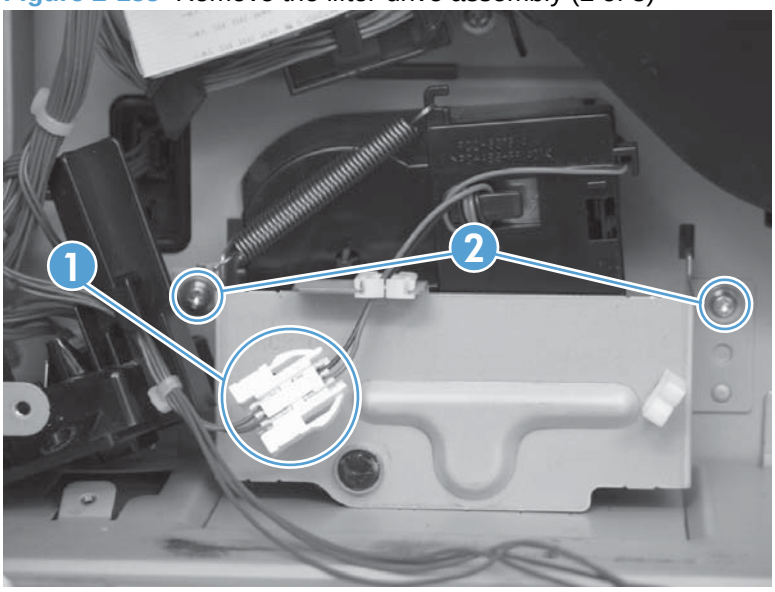

3. Remove the lifter-drive assembly from the product.

△ **CAUTION:** The spring on the assembly is not captive. Do not lose the spring when the assembly is removed.

Figure 2-156 Remove the lifter-drive assembly (3 of 3)

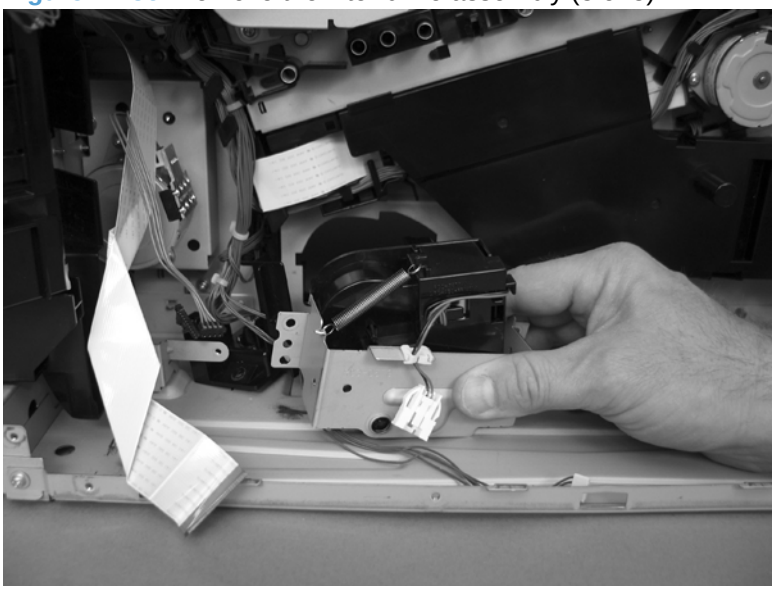

NOTE: Make sure that the lifter-drive assembly moves up and down easily after reinstalling.

Lifter base assembly

Before proceeding, remove the following components:

- Formatter. See Formatter PCA on page 78
- Upper-left cover. See Upper-left cover on page 96.
- Power-supply cover. See Power-supply cover on page 98.
- Left cover. See Left cover on page 99.
- Front-top cover. See Front-top cover on page 100
- Right-rear cover. See Right-rear cover on page 110.
- Rear cover. See Rear cover on page 112.
- Interconnect board (ICB). See Interconnect board (ICB) on page 153.
- Low-voltage power supply. See Low-voltage power supply (LVPS) on page 157.
- High-voltage power supply lower. See High-voltage power supply lower (HVPS-D) on page 163.

Remove the lifter base assembly

1. Disconnect one connector.

Figure 2-157 Remove the lifter base assembly (1 of 2)

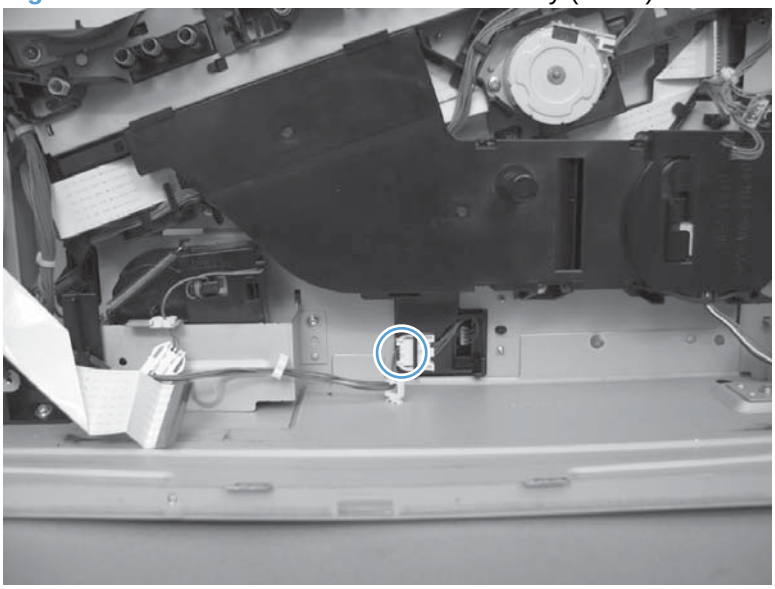

2. From inside the Tray 2 cavity, remove four screws, and then remove the lifter base assembly.

NOTE: Pull the assembly straight from the product without tipping to prevent the spring from falling from the assembly.

Reinstallation tip If the tray does not completely close when reinstalled, push on the lever in the opening (callout 1) with a flat blade screwdriver to reset the spring in the closing mechanism.

Figure 2-158 Remove the lifter base assembly (2 of 2)

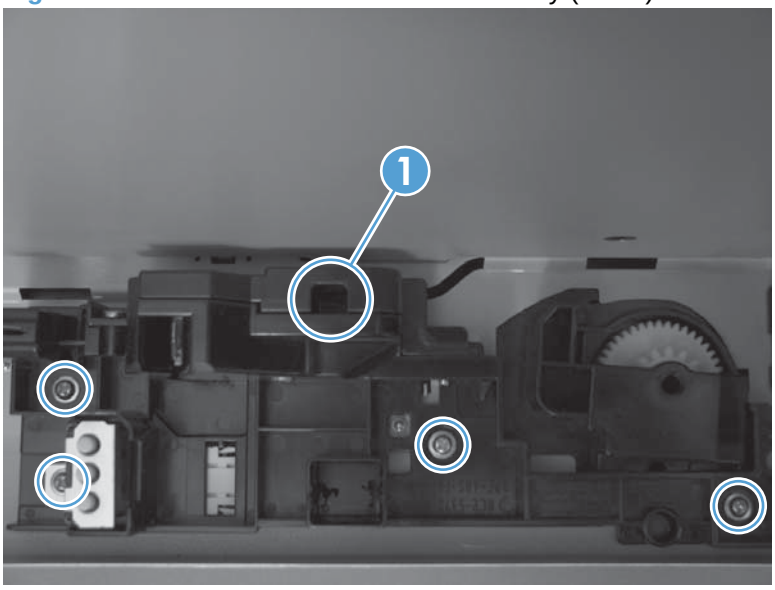

Reinstall the lifter base assembly

If the spring falls from the lifter base assembly, reinstall it in the lifter before reinstalling the lifter base assembly.

1. Make sure the black rubber end is seated on the spring.

Figure 2-159 Reinstall the lifter base assembly (1 of 2)

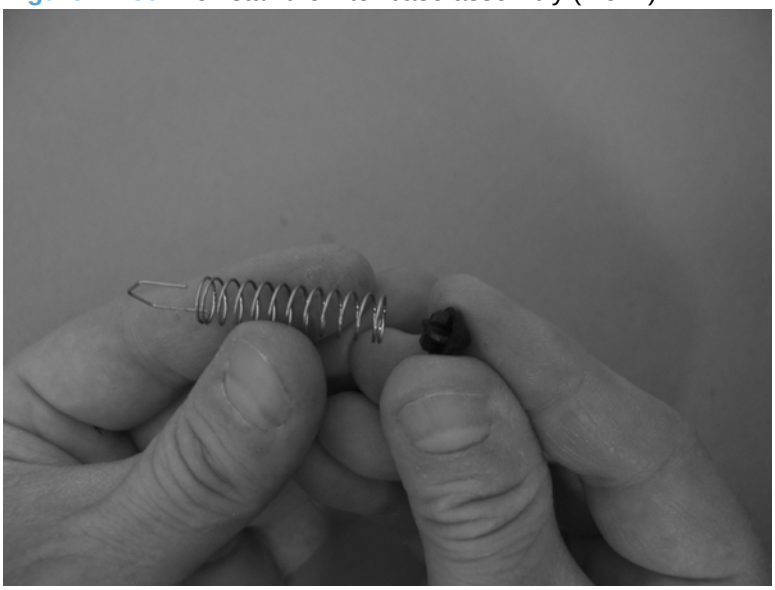

2. Place the spring in the lifter before installing the assembly on the product.

Figure 2-160 Reinstall the lifter base assembly (2 of 2)

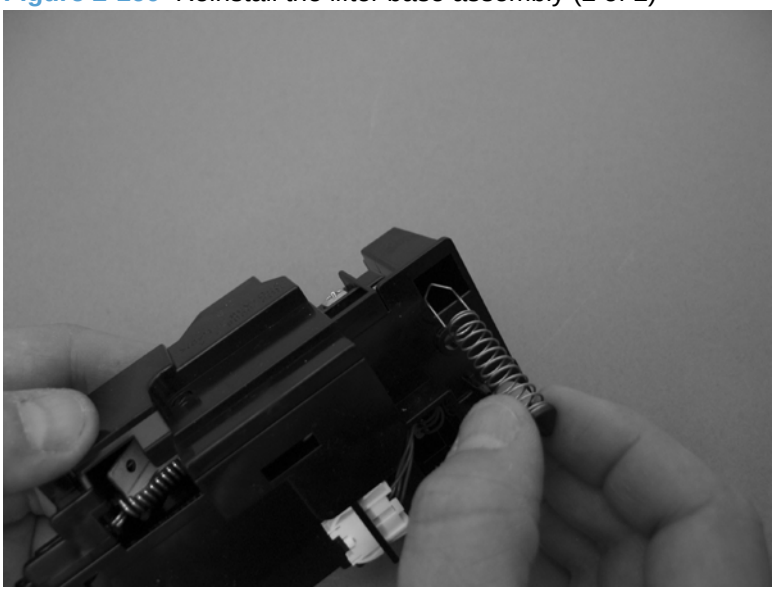

Tray-pickup drive assembly

Before proceeding, remove the following components:

- Formatter. See Formatter PCA on page 78.
- Upper-left cover. See Upper-left cover on page 96.
- Power-supply cover. See Power-supply cover on page 98.
- Left cover. See Left cover on page 99.
- Front-top cover. See Front-top cover on page 100.
- Rear-top cover. See Rear-top cover on page 102.
- Right-front cover. See Right-front cover on page 103.
- Rear cover. See Rear cover on page 112.
- Right-rear cover. See Right-rear cover on page 110.
- Interconnect board (ICB). See Interconnect board (ICB) on page 153.
- Low-voltage power supply. See Low-voltage power supply (LVPS) on page 157.
- High-voltage power supply lower. See High-voltage power supply lower (HVPS-D) on page 163.

Remove the tray-pickup drive assembly

NOTE: To remove the pickup motor only, see Pickup motor on page 172.

1. Release two tabs, and then remove the power-supply fan.

Figure 2-161 Remove the tray-pickup drive assembly (1 of 3)

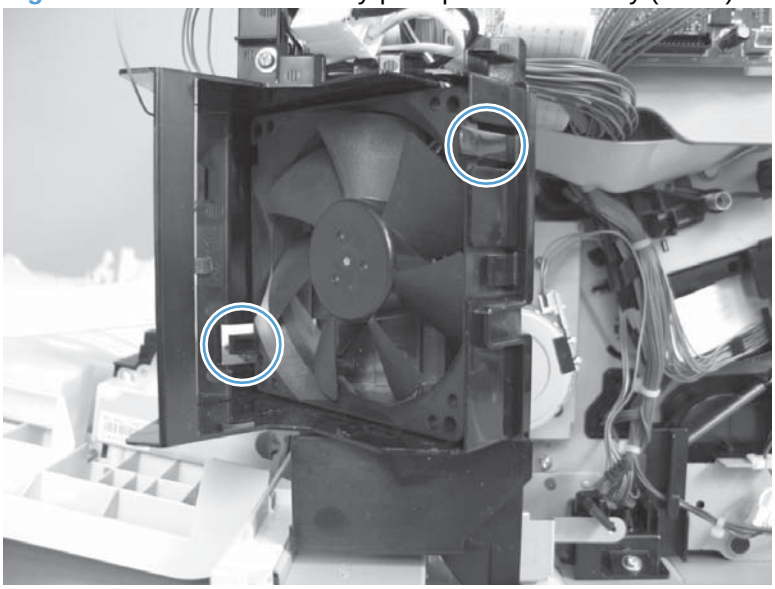

2. Remove two screws (callout 1), disconnect one connector (callout 2), and then remove the pickup motor (callout 35).

Figure 2-162 Remove the tray-pickup drive assembly (2 of 3)

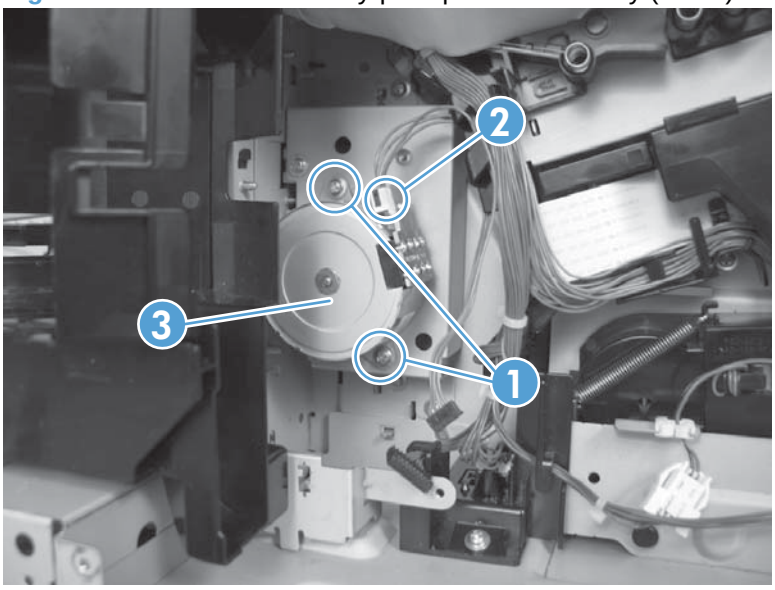

3. Remove three screws, and then remove the tray-pickup drive assembly.

NOTE: The cams on the main-drive assembly can prevent the tray-pickup drive assembly from releasing from the product. If you cannot remove the assembly, remove the DC controller and tray to provide additional space. See DC controller PCA and tray on page 161. You might also need to remove the wire guide from the main-drive assembly. See Figure 2-198 Remove the main-drive assembly (3 of 6) on page 205.

Figure 2-163 Remove the tray-pickup drive assembly (3 of 3)

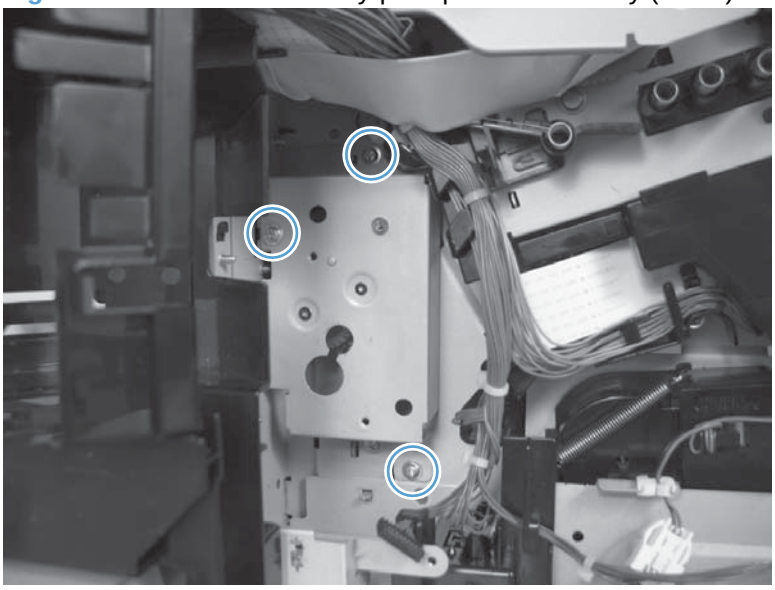

Tray-pickup assembly

Before proceeding, remove the following components:

- Formatter. See Formatter PCA on page 78.
- Secondary transfer assembly. See Secondary transfer assembly on page 119.
- Intermediate transfer belt (ITB). See Intermediate transfer belt (ITB) on page 92.
- Upper-left cover. See Upper-left cover on page 96.
- Power-supply cover. See Power-supply cover on page 98.
- Left cover. See Left cover on page 99.
- Front-top cover. See Front-top cover on page 100.
- Rear-top cover. See Rear-top cover on page 102.
- Right-rear cover. See Right-rear cover on page 110.
- Rear cover. See Rear cover on page 112.
- Registration assembly. See Registration assembly on page 128.
- Interconnect board (ICB). See Interconnect board (ICB) on page 153.
- Low-voltage power supply. See Low-voltage power supply (LVPS) on page 157.
- High-voltage power supply lower. See High-voltage power supply lower (HVPS-D) on page 163.

Remove the tray-pickup assembly

NOTE: This task requires that you remove three feed guides on the right side of the product before you can remove the tray-pickup assembly.

1. Remove one screw (callout 1), and then disconnect two connectors (callout 2).

Figure 2-164 Remove the tray-pickup assembly (1 of 11)

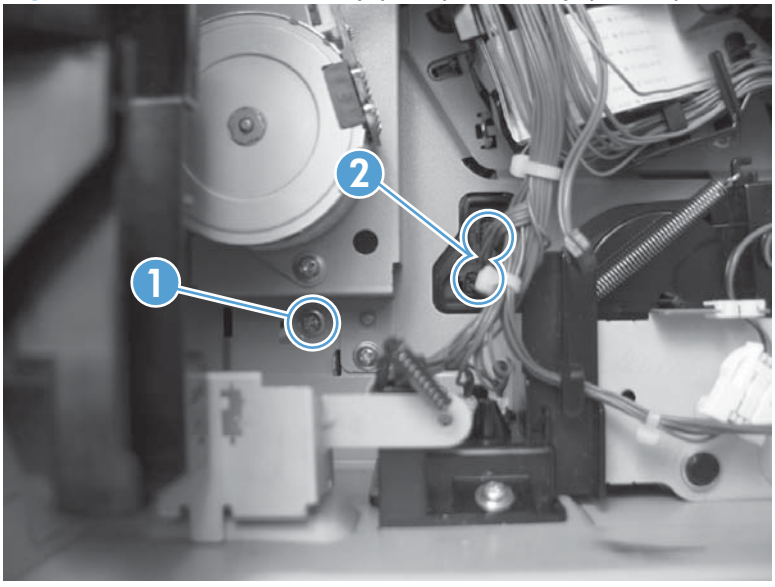

2. From the front of the product, remove one screw (callout 1), and then remove one tray rail (callout 2).

Figure 2-165 Remove the tray-pickup assembly (2 of 11)

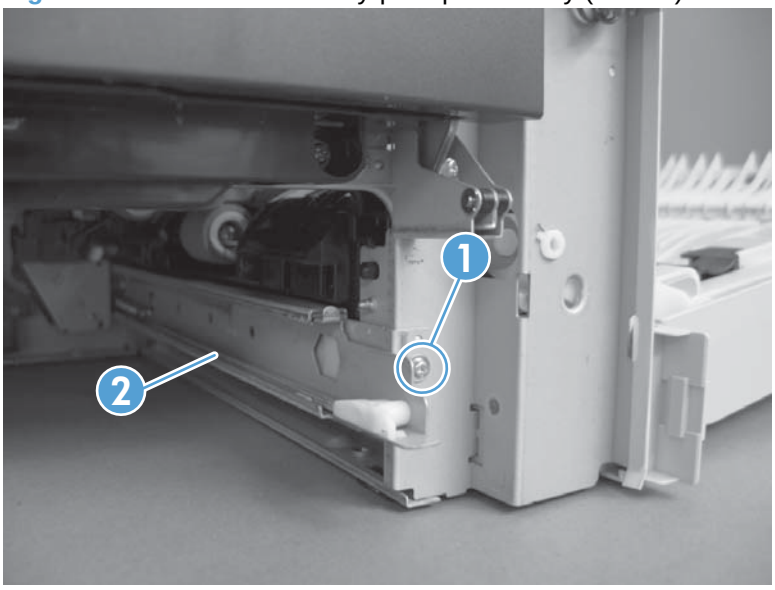

3. From the right side of the product, remove two screws (callout 1) and one cover (callout 2).

Figure 2-166 Remove the tray-pickup assembly (3 of 11)

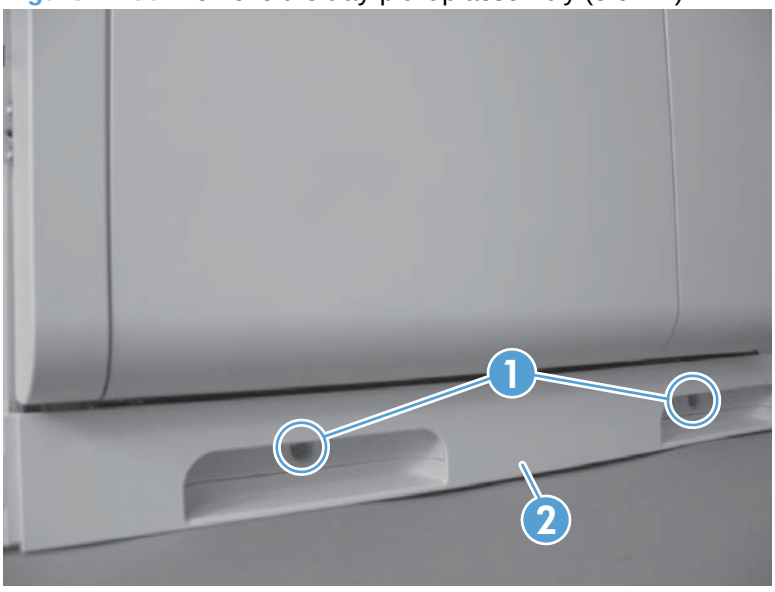

4. Close the right-door assembly. Push in and then push up on the stopper to release.

Figure 2-167 Remove the tray-pickup assembly (4 of 11)

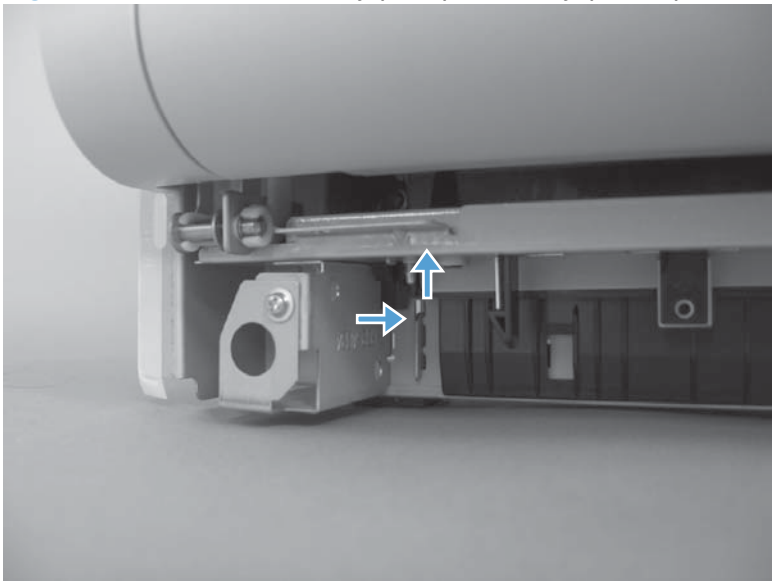

5. Open the right-door assembly. Lift the two link arms (callout 1) to release from the product, and then remove the paper guide (callout 2).

Figure 2-168 Remove the tray-pickup assembly (5 of 11)

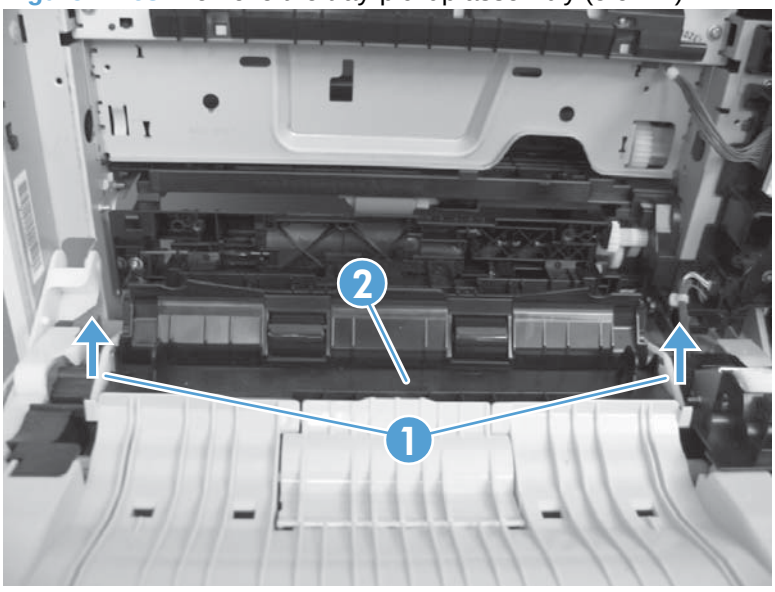

6. Close the right-door assembly. Push the two tabs toward each other, and then push up to release the feed guide.

Figure 2-169 Remove the tray-pickup assembly (6 of 11)

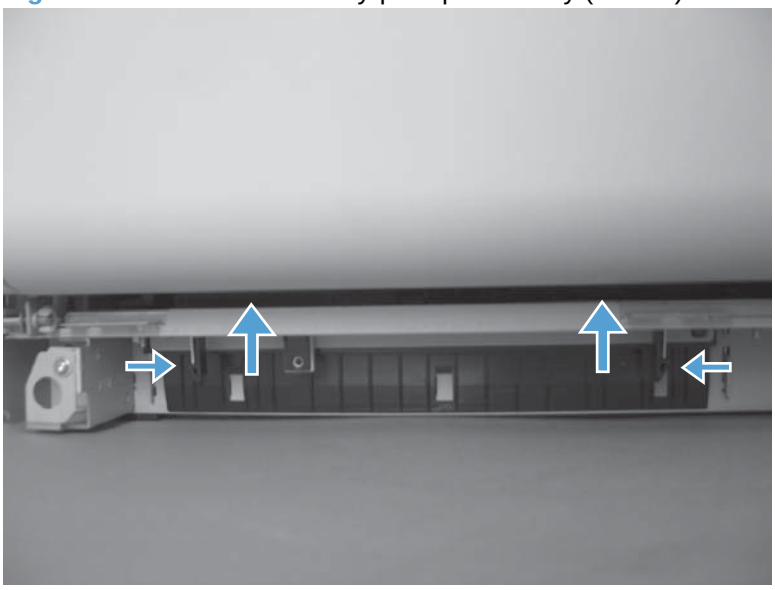

7. Open the right-door assembly, and then remove the feed guide.

Figure 2-170 Remove the tray-pickup assembly (7 of 11)

8. Remove two screws (callout 1), and then remove two brackets (callout 2).

Figure 2-171 Remove the tray-pickup assembly (8 of 11)

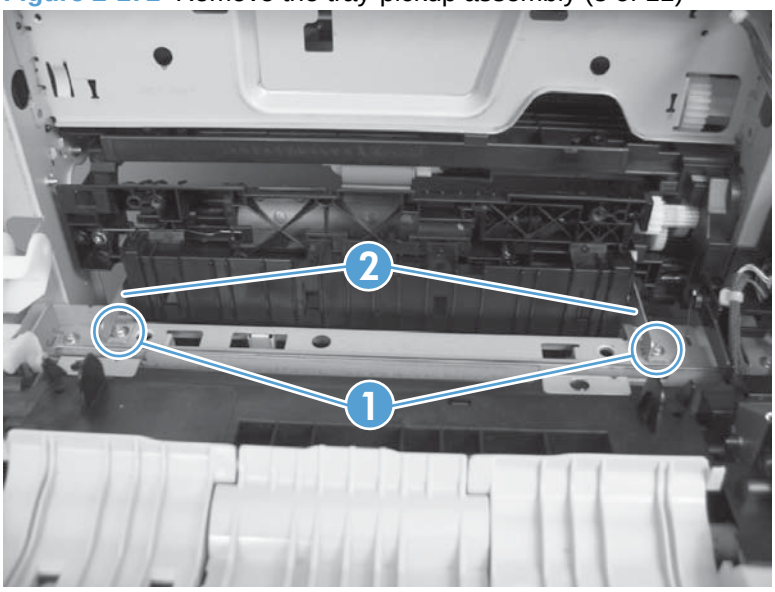

9. Release one tab (callout 1), and then slide the feed guide (callout 2) toward the front of the product to remove.

Figure 2-172 Remove the tray-pickup assembly (9 of 11)

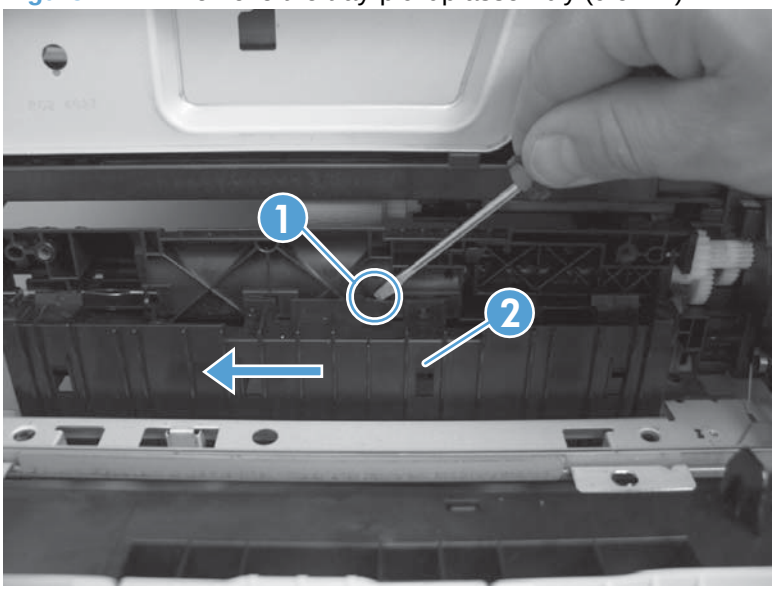

10. Remove one screw.

Figure 2-173 Remove the tray-pickup assembly (10 of 11)

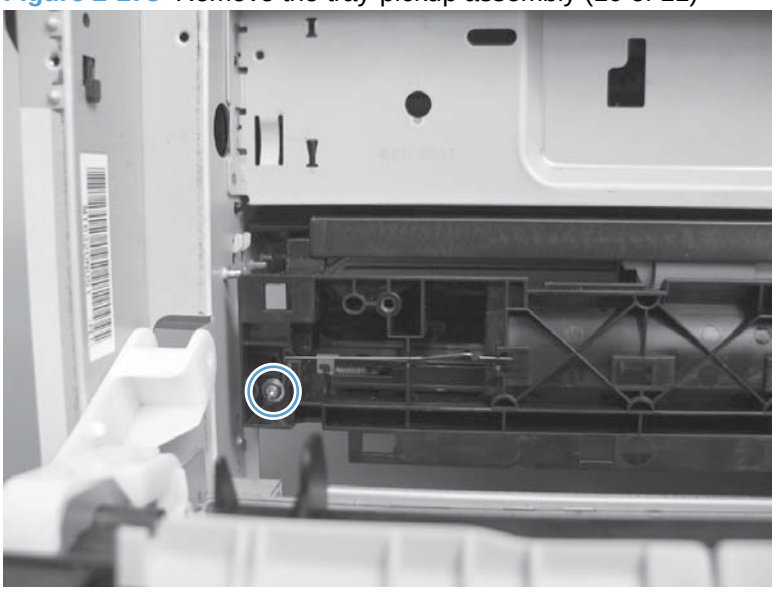

11. Remove the tray-pickup assembly.

Figure 2-174 Remove the tray-pickup assembly (11 of 11)

Laser/scanner assembly (Y/M)

Before proceeding, remove the following components:

- Toner collection unit. See Toner-collection unit on page 76.
- Intermediate transfer belt (ITB). See Intermediate transfer belt (ITB) on page 92.
- Upper-left cover. See Upper-left cover on page 96.
- Power-supply cover. See Power-supply cover on page 98.
- Left cover. See Left cover on page 99.
- Front-top cover. See Front-top cover on page 100.
- Rear-top cover. See Rear-top cover on page 102.
- Rear cover. See Rear cover on page 112.
- Cartridge fan and environmental sensor. See Cartridge fan and environmental sensor on page 137.
- Toner collection sensor and scanner-thermistor assembly. See Toner-collection sensor and scanner-thermistor assembly on page 141.
- Interconnect board (ICB). See Interconnect board (ICB) on page 153.
- Low-voltage power supply. See Low-voltage power supply (LVPS) on page 157.
- High-voltage power supply lower. See High-voltage power supply lower (HVPS-D) on page 163.
- Exhaust fan and fan duct. See Exhaust fan and fan duct on page 169.

Remove the laser/scanner assembly (Y/M)

NOTE: After installing a new laser/scanner assembly, be sure to calibrate the product. See Calibrate the product on page 313.

1. Release one spring.

CAUTION: The spring is not captive. Do not lose the spring when it is removed. Use a pair of needle-nose pliers to safely retain the spring when it is removed. Do not use a flat blade screwdriver to remove the spring; the spring could forcibly leave the product and strike you.

Figure 2-175 Remove the laser/scanner assembly (Y/M) (1 of 5)

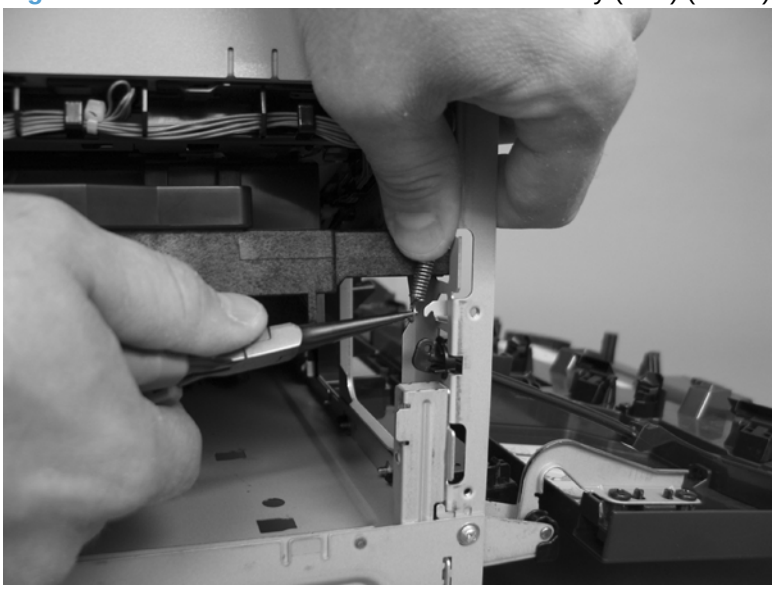

2. Disconnect one connector.

Figure 2-176 Remove the laser/scanner assembly (Y/M) (2 of 5)

3. Release one spring (callout 1), and then disconnect one FFC (callout 2).

Reinstallation tip When reinstalled, the toroid (callout 3) must be correctly positioned on the wire guide (in the provided slots) so that the fan duct will fully seat in the product when it is reinstalled.

Figure 2-177 Remove the laser/scanner assembly (Y/M) (3 of 5)

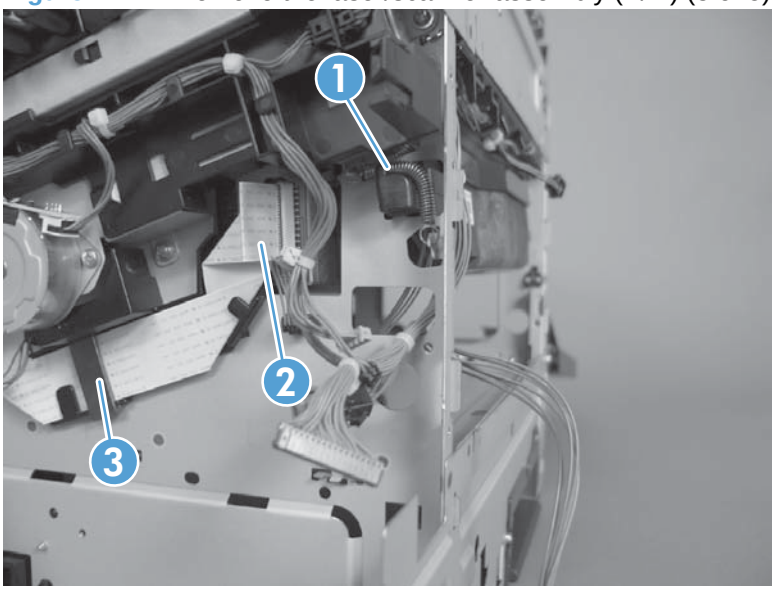

CAUTION: The spring is not captive. Do not lose the spring when it is removed. Use a pair of needle-nose pliers to safely retain the spring when it is removed. Do not use a flat blade screwdriver to remove the spring; the spring could forcibly leave the product and strike you.

Reinstallation tip When you reinstall the spring, make sure that the laser/scanner fits tightly up against the product chassis, and make sure that the FFC is fully seated in the connector. The locator tabs on the front and rear of the scanner must be firmly seated in the slots in the chassis.

4. Rotate the front of the laser/scanner assembly down (callout 1), and then slide it toward the right (callout 2). Lower the left corner, and then rotate the left corner out of the product (callout 3).

Reinstallation tip When the scanner is reinstalled, make sure that the tab on the front of the laser/scanner is inserted in the alignment hole in the product chassis. See callout 1 in Figure 2-179 Remove the laser/scanner assembly (Y/M) (5 of 5) on page 189

Figure 2-178 Remove the laser/scanner assembly (Y/M) (4 of 5).

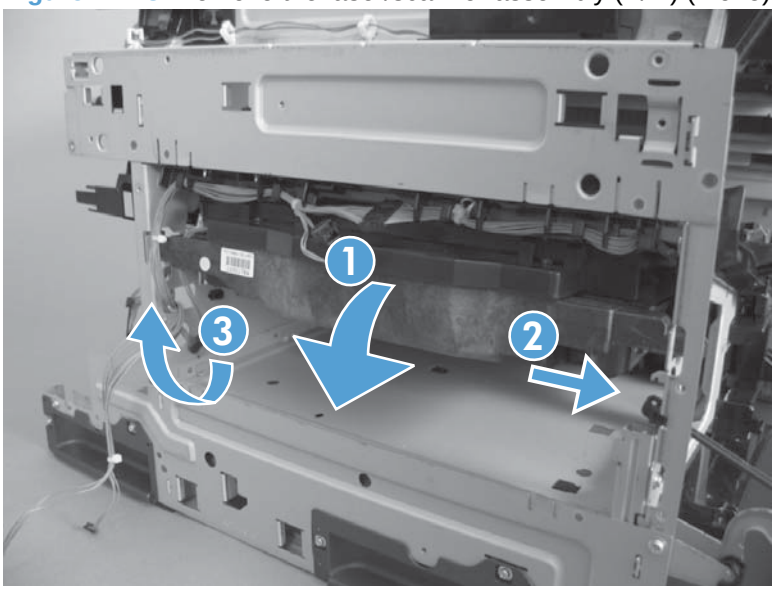

5. Pull the laser/scanner assembly out of the product to remove it.

Reinstallation tip When the scanner is removed, locate the alignment tab (callout 1) on the front of the laser/scanner. The tab must be inserted in the alignment hole in the product chassis when the assembly is reinstalled.

Figure 2-179 Remove the laser/scanner assembly (Y/M) (5 of 5)

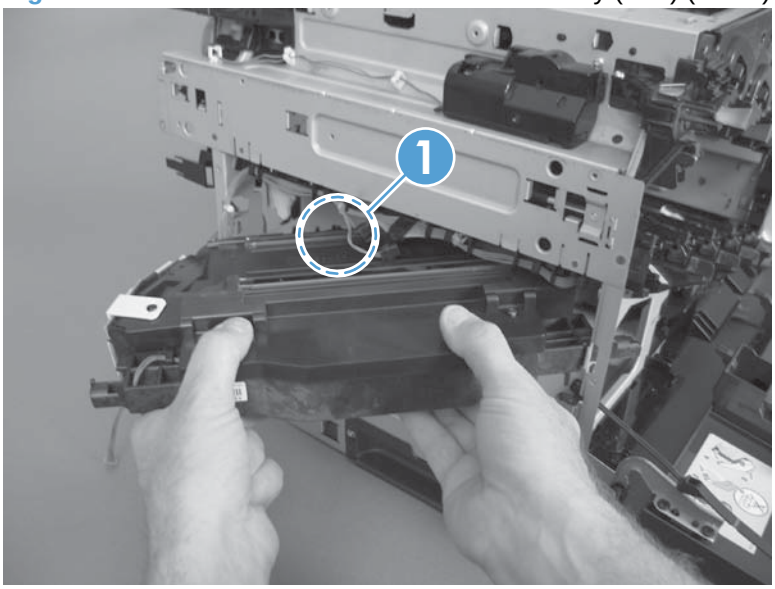

Laser/scanner assembly (C/Bk)

Before proceeding, remove the following components:

- Toner collection unit. See Toner-collection unit on page 76.
- Intermediate transfer belt (ITB). See Intermediate transfer belt (ITB) on page 92.
- Upper-left cover. See Upper-left cover on page 96.
- Power-supply cover. See Power-supply cover on page 98.
- Left cover. See Left cover on page 99.
- Front-top cover. See Front-top cover on page 100.
- Rear-top cover. See Rear-top cover on page 102.
- Rear cover. See Rear cover on page 112.
- Cartridge fan and environmental sensor. See Cartridge fan and environmental sensor on page 137.
- Toner collection sensor and scanner-thermistor assembly. See Toner-collection sensor and scanner-thermistor assembly on page 141.
- Interconnect board (ICB). See Interconnect board (ICB) on page 153.
- Low-voltage power supply. See Low-voltage power supply (LVPS) on page 157.
- High-voltage power supply lower. See High-voltage power supply lower (HVPS-D) on page 163.
- Exhaust fan and fan duct. See Exhaust fan and fan duct on page 169.
- Laser/scanner assembly (Y/M). See Laser/scanner assembly (Y/M) on page 186.

Remove the laser/scanner assembly (C/Bk)

NOTE: After installing a new laser/scanner assembly, be sure to calibrate the product. See Calibrate the product on page 313.

1. Release one spring (callout 1), and then disconnect one FFC (callout 2).

CAUTION: The spring is not captive. Do not lose the spring when it is removed. Use a pair of needle-nose pliers to safely retain the spring when it is removed. Do not use a flat blade screwdriver to remove the spring; the spring could forcibly leave the product and strike you.

Reinstallation tip When you reinstall the spring, make sure that the laser/scanner fits tightly up against the product chassis, and make sure that the FFC is fully seated in the connector. The locator tabs on the front of the scanner must be firmly seated in the slots in the chassis.

Figure 2-180 Remove the laser/scanner assembly (C/Bk) (1 of 5)

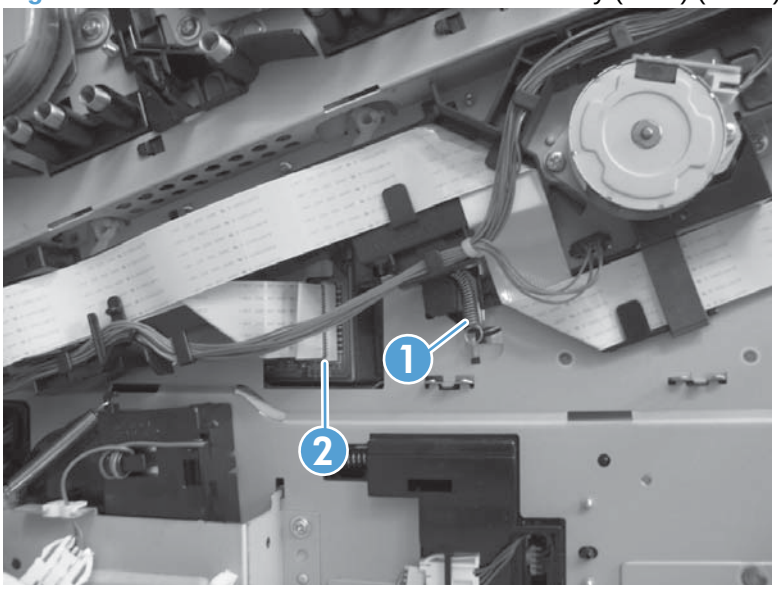

2. Disconnect one connector.

Figure 2-181 Remove the laser/scanner assembly (C/Bk) (2 of 5)

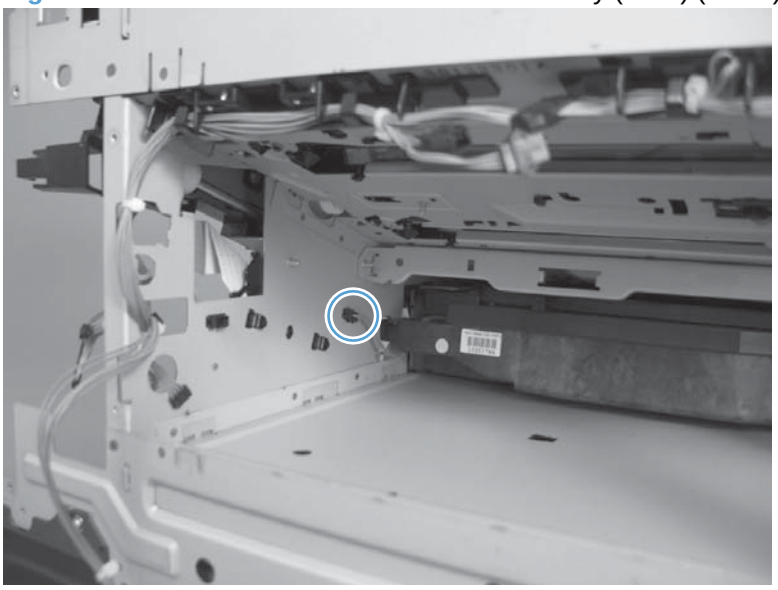

3. Remove five screws (callout 1), and then remove the cover (callout 2).

△ **CAUTION:** Be careful. The PGC actuators are easily dislodged when the cover is removed. See Figure 2-185 Reinstall the PGC actuators (1 of 5) on page 193. To reinstall the actuators, see Reinstall the protective glass cleaner (PGC) actuators on page 193.

Figure 2-182 Remove the laser/scanner assembly (C/Bk) (3 of 5)

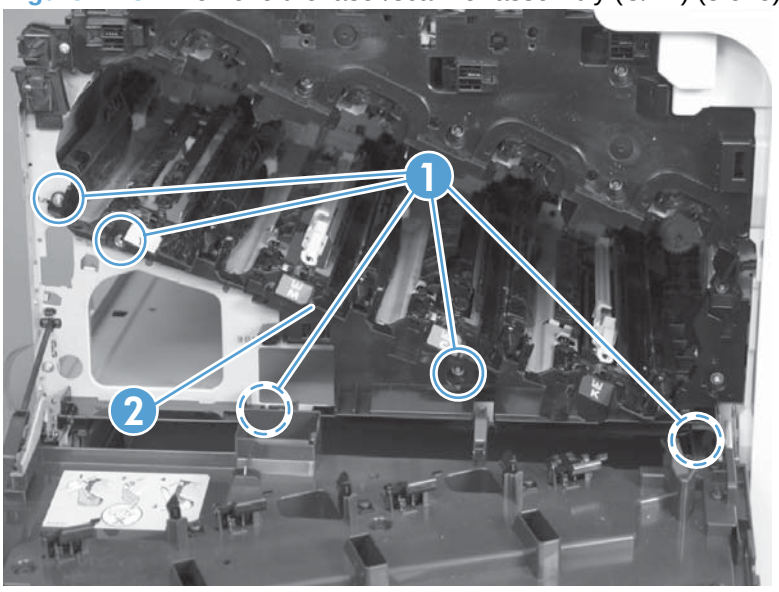

4. Release one spring.

△ **CAUTION:** The spring is not captive. Do not lose the spring when it is removed. Use a pair of needle-nose pliers to safely retain the spring when it is removed. Do not use a flat blade screwdriver to remove the spring; the spring could forcibly leave the product and strike you.

Reinstallation tip When you reinstall the spring, make sure that the laser/scanner fits tightly up against the product chassis.

Figure 2-183 Remove the laser/scanner assembly (C/Bk) (4 of 5)

5. Rotate the corner of the assembly away from the product until you can see the PCA, and then remove the assembly from the product.

Reinstallation tip When the laser/scanner is correctly positioned in the chassis, the plastic parts which protrude at the front and rear of the product will be firmly seated against the locator tabs on the chassis. Verify that the assembly is correctly seated, and then install the spring.

Figure 2-184 Remove the laser/scanner assembly (C/Bk) (5 of 5)

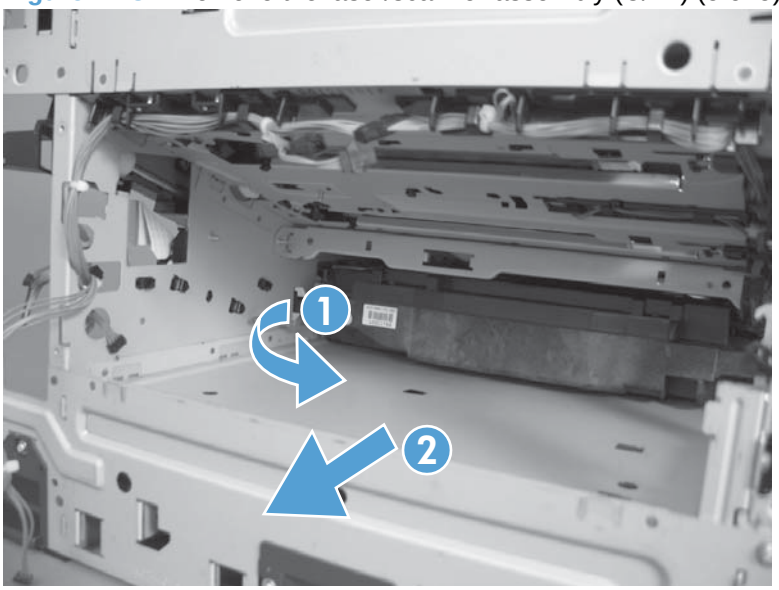

Reinstall the protective glass cleaner (PGC) actuators

1. The following figure shows a dislodged PGC actuator.

TIP: If the actuator and spring are only slightly dislodged, you might be able to easily push them back into place.

Figure 2-185 Reinstall the PGC actuators (1 of 5)

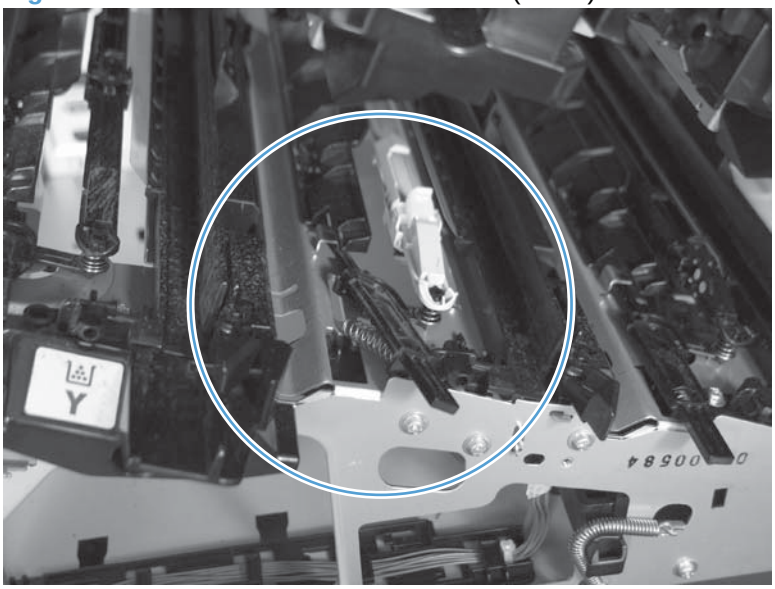

2. Remove the actuator and spring from the product. Install the spring on the actuator.

Figure 2-186 Reinstall the PGC actuators (2 of 5)

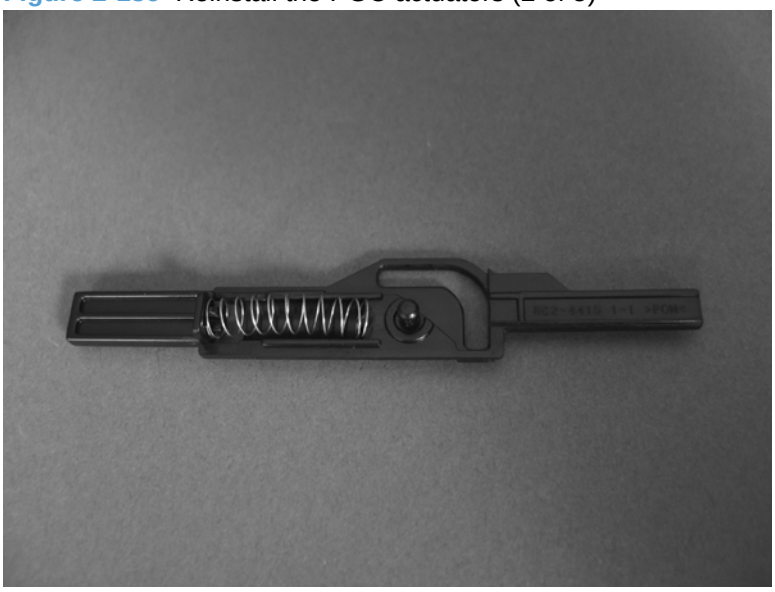

3. Before proceeding, take note of the following:

- **Callout 1**: The pin on the actuator will be installed into the slot in the chassis.
- **Callout 2**: The pin on the pivot arm will be installed into the slot on the actuator.
- **Callout 3**: The end of the spring will be installed onto the tab on the chassis.

Figure 2-187 Reinstall the PGC actuators (3 of 5)

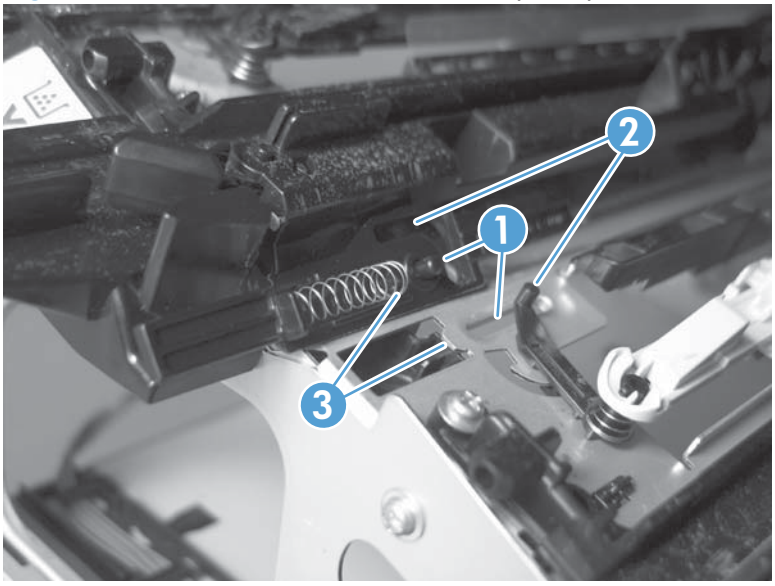

4. Place the end of the actuator into the PGC rod, and then use a small flat blade screw driver to fasten the end of the spring on the tab on the chassis.

Figure 2-188 Reinstall the PGC actuators (4 of 5)

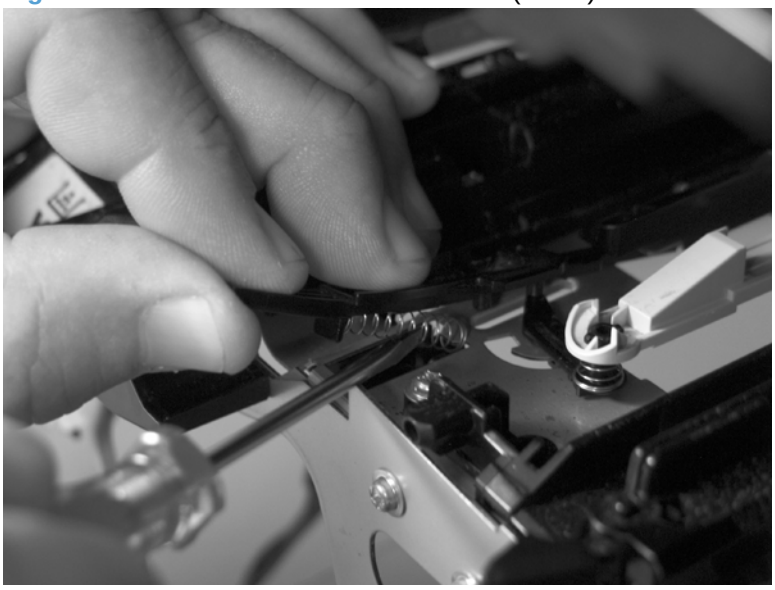

5. Push down on the actuator to seat it into place. Verify that the actuators is correctly installed. The PGC actuator must freely move when you push in on the actuator.

Figure 2-189 Reinstall the PGC actuators (5 of 5)

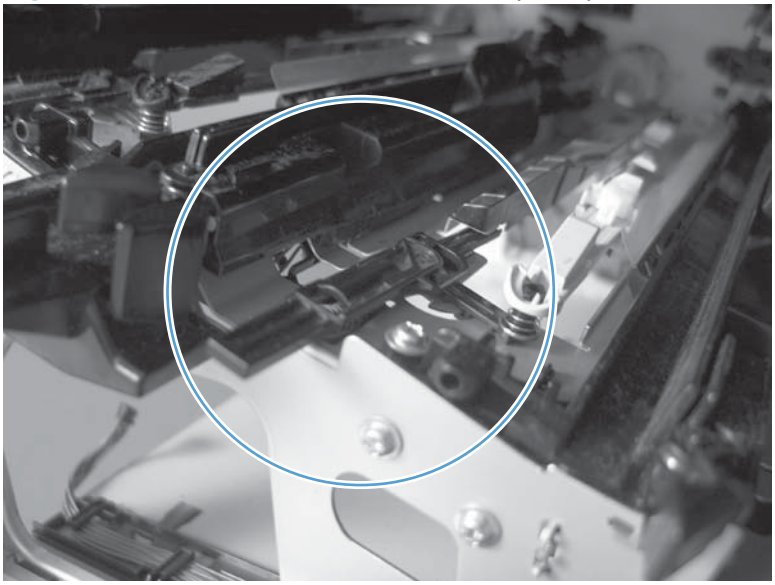

High-voltage power supply upper (HVPS-T)

Before proceeding, remove the following components:

- Formatter. See Formatter PCA on page 78.
- Upper-left cover. See Upper-left cover on page 96.
- Power-supply cover. See Power-supply cover on page 98.
- Left cover. See Left cover on page 99.
- Front-top cover. See Front-top cover on page 100.
- Rear-top cover. See Rear-top cover on page 102.
- Rear cover. See Rear cover on page 112.
- Interconnect board (ICB). See Interconnect board (ICB) on page 153.
- Low-voltage power supply. See Low-voltage power supply (LVPS) on page 157.
- DC controller and tray. See DC controller PCA and tray on page 161.

Remove the high-voltage power supply upper

△ **CAUTION:** ESD-sensitive part.

1. Disconnect one connector.

Figure 2-190 Remove the high-voltage power supply upper (1 of 2)

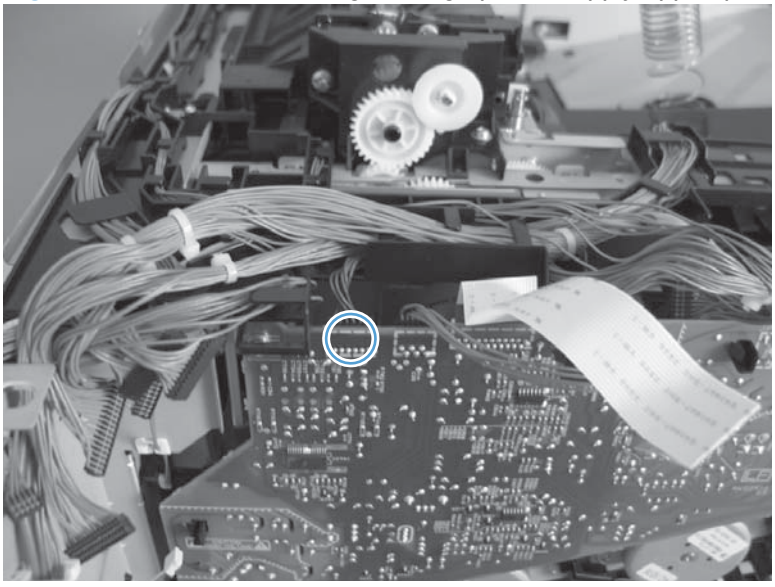

2. Remove three screws (callout 1), release four tabs (callout 2), and then remove the power supply.

Figure 2-191 Remove the high-voltage power supply upper (2 of 2)

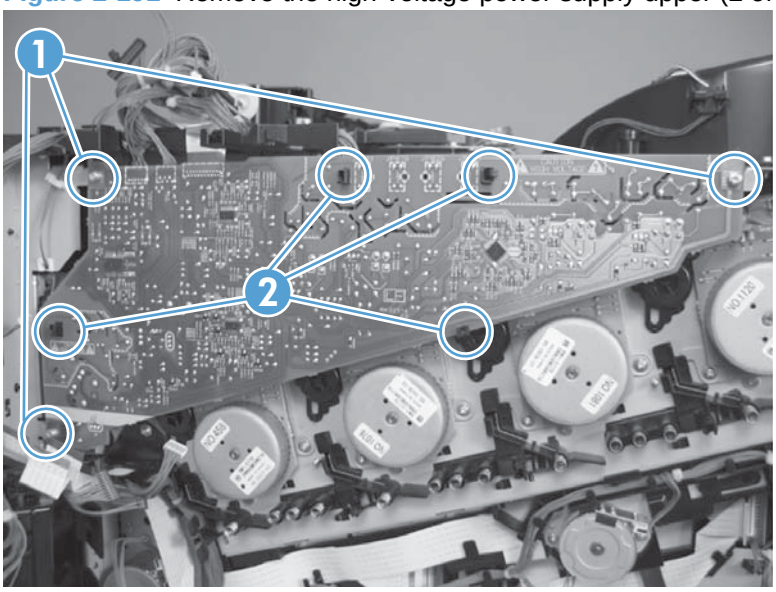

Reinstall the high-voltage power supply upper

When you reinstall the power supply, look through the holes in the PCA and make sure that the high-voltage contact springs are correctly seated against the PCA.

NOTE: For a replacement power supply, remove one wire harness (callout 1) and then install it on the replacement power supply.

Figure 2-192 Reinstall the high-voltage power supply upper

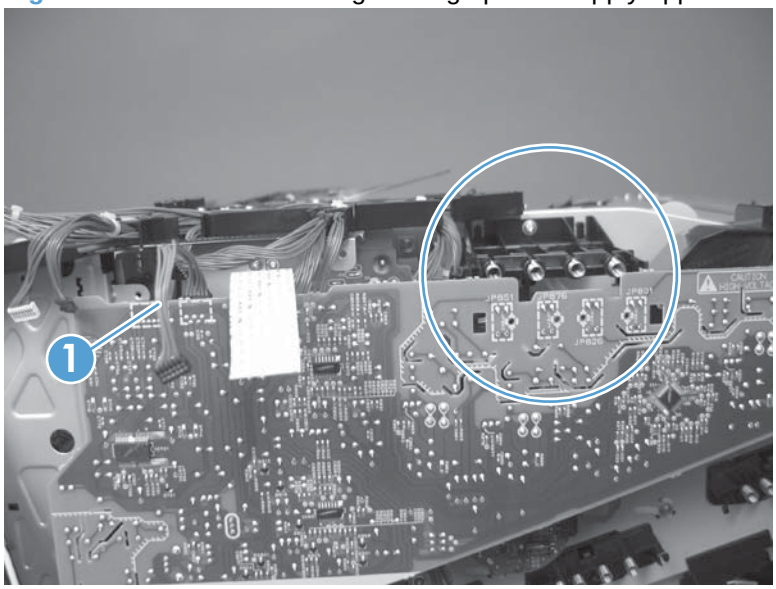

Yellow, magenta, cyan, and black drum motors

Before proceeding, remove the following components:

- Upper-left cover. See Upper-left cover on page 96.
- Power-supply cover. See Power-supply cover on page 98.
- Left cover. See Left cover on page 99.
- Front-top cover. See Front-top cover on page 100.
- Rear-top cover. See Rear-top cover on page 102.
- Rear cover. See Rear cover on page 112.
- Interconnect board (ICB). See Interconnect board (ICB) on page 153.
- Low-voltage power supply. See Low-voltage power supply (LVPS) on page 157.
- DC controller PCA and tray. See DC controller PCA and tray on page 161.
- High-voltage power supply upper. See High-voltage power supply upper (HVPS-T) on page 196.

Remove the yellow, magenta, cyan, and black drum motors

▲ For each motor, remove three screws (callout 1), disconnect one connector (callout 2), and then remove the motor (callout 3)

Figure 2-193 Remove the yellow, magenta, cyan, and black drum motors

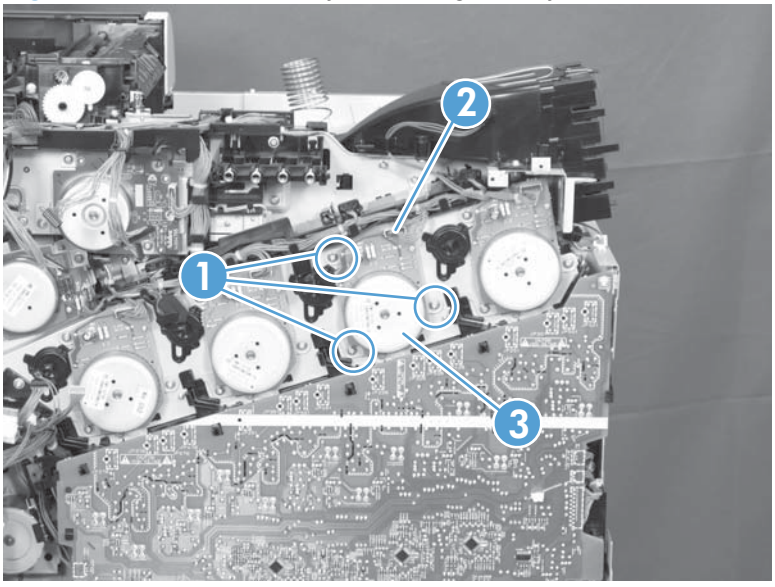

Fuser motor

Before proceeding, remove the following components:

- Formatter. See Formatter PCA on page 78.
- Upper-left cover. See Upper-left cover on page 96.
- Power-supply cover. See Power-supply cover on page 98.
- Left cover. See Left cover on page 99.
- Front-top cover. See Front-top cover on page 100.
- Rear-top cover. See Rear-top cover on page 102.
- Rear cover. See Rear cover on page 112.
- Interconnect board (ICB). See Interconnect board (ICB) on page 153.
- Low-voltage power supply. See Low-voltage power supply (LVPS) on page 157.
- DC controller PCA. See DC controller PCA and tray on page 161.
- High-voltage power supply upper. See High-voltage power supply upper (HVPS-T) on page 196.

Remove the fuser motor

Remove three screws (callout 1), disconnect one connector (callout 2), and then remove the motor (callout 3).

Figure 2-194 Remove the fuser motor

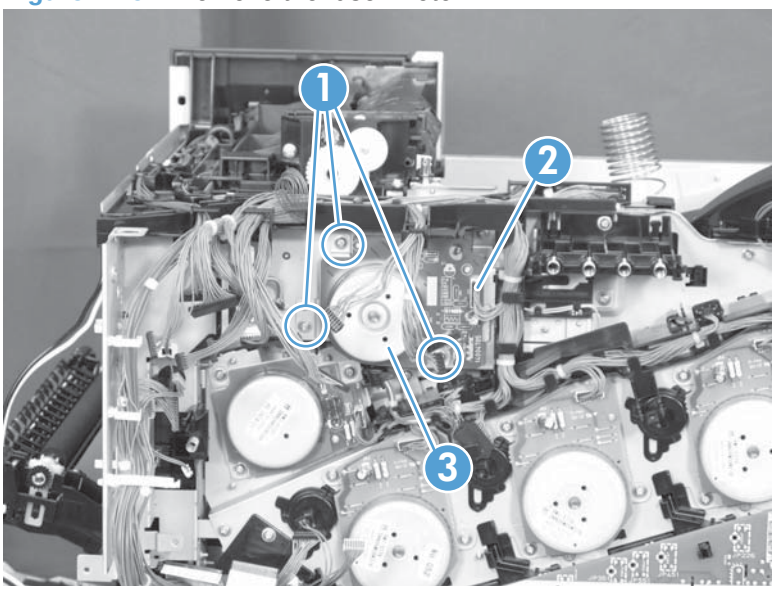

ITB motor

Before proceeding, remove the following components:

- Upper-left cover. See Upper-left cover on page 96.
- Power-supply cover. See Power-supply cover on page 98.
- Front-top cover. See Front-top cover on page 100.
- Rear-top cover. See Rear-top cover on page 102.
- Left cover. See Left cover on page 99.
- Rear cover. See Rear cover on page 112.
- Interconnect board (ICB). See Interconnect board (ICB) on page 153.
- Low-voltage power supply. See Low-voltage power supply (LVPS) on page 157.
- DC controller PCA. See DC controller PCA and tray on page 161.
- High-voltage power supply upper. See High-voltage power supply upper (HVPS-T) on page 196.

Remove the ITB motor

▲ Remove three screws (callout 1), disconnect one connector (callout 2), and then remove the motor (callout 3).

Figure 2-195 Remove the ITB motor (1 of 2)

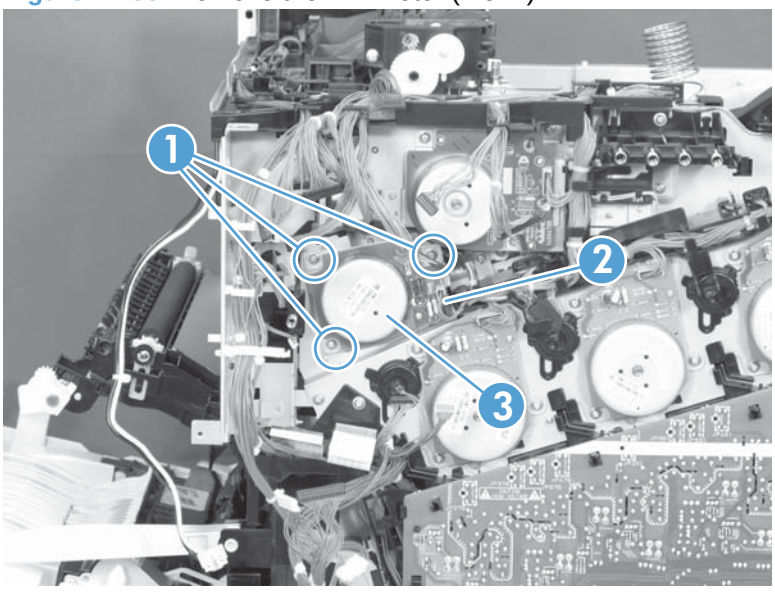

Main-drive assembly

NOTE: Removing the main-drive assembly typically requires more than 2 hours to complete.

Before proceeding, remove the following components:

- Formatter. See Formatter PCA on page 78.
- Intermediate transfer belt (ITB). See Intermediate transfer belt (ITB) on page 92.
- Upper-left cover. See Upper-left cover on page 96.
- Power-supply cover. See Power-supply cover on page 98.
- Left cover. See Left cover on page 99.
- Front-top cover. See Front-top cover on page 100.
- Rear-top cover. See Rear-top cover on page 102.
- Rear cover. See Rear cover on page 112.
- Interconnect board (ICB). See Interconnect board (ICB) on page 153.
- Low-voltage power supply. See Low-voltage power supply (LVPS) on page 157.
- DC controller PCA. See DC controller PCA and tray on page 161.
- High-voltage power supply lower. See High-voltage power supply lower (HVPS-D) on page 163.
- Exhaust fan and fan duct. See Exhaust fan and fan duct on page 169.
- High-voltage power supply upper. See High-voltage power supply upper (HVPS-T) on page 196.
- Yellow, magenta, cyan, and black drum motors. See Remove the yellow, magenta, cyan, and black drum motors on page 199.

Remove the main-drive assembly

1. Remove eight connectors (callout 1), and then release the wire harnesses from the guides (callout 2).

NOTE: Leave the wire harnesses with the product.

Figure 2-196 Remove the main-drive assembly (1 of 6)

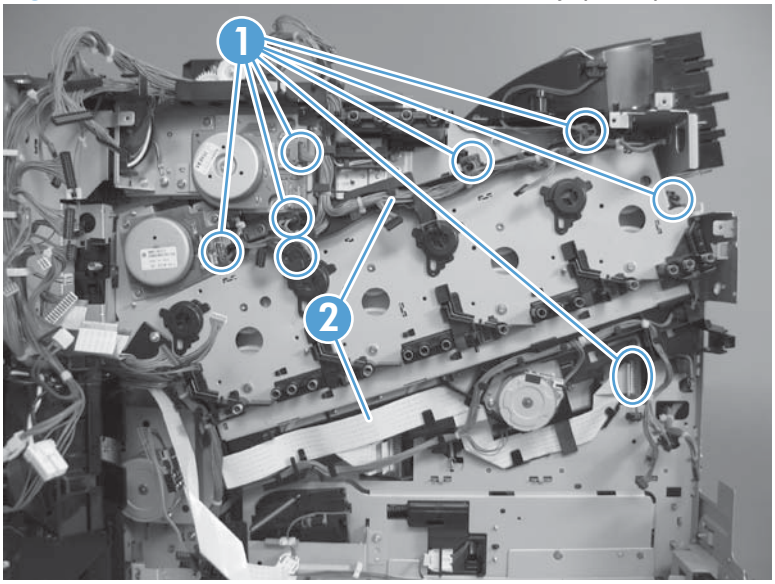

2. Remove two screws (callout 1), disconnect one connector (callout 2), and then remove the developing-disengagement motor.

NOTE: When the motor is reinstalled, make sure the motor PCA is positioned at the top of the assembly.

Figure 2-197 Remove the main-drive assembly (2 of 6)

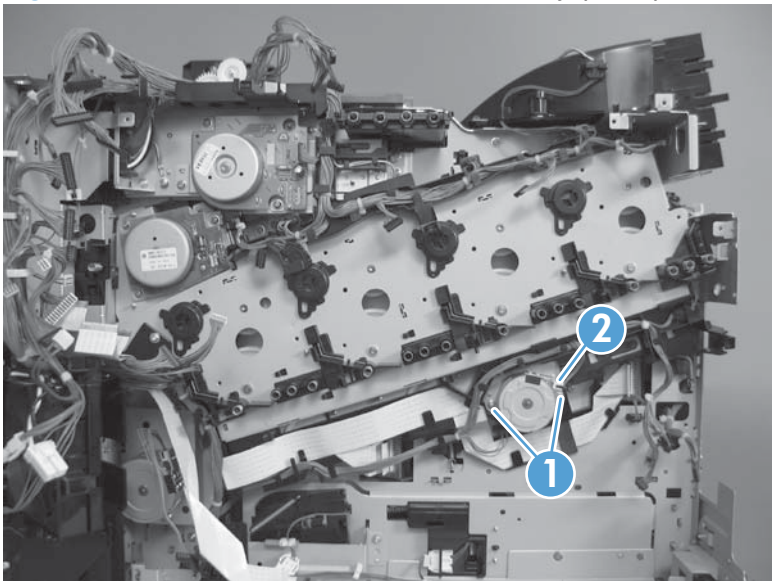

3. Remove one screw (callout 1), and then remove the wire guide from the main-drive assembly (callout 2).

NOTE: Leave the wire harnesses connected to the wire guide and attached to the product for easier reinstallation.

Figure 2-198 Remove the main-drive assembly (3 of 6)

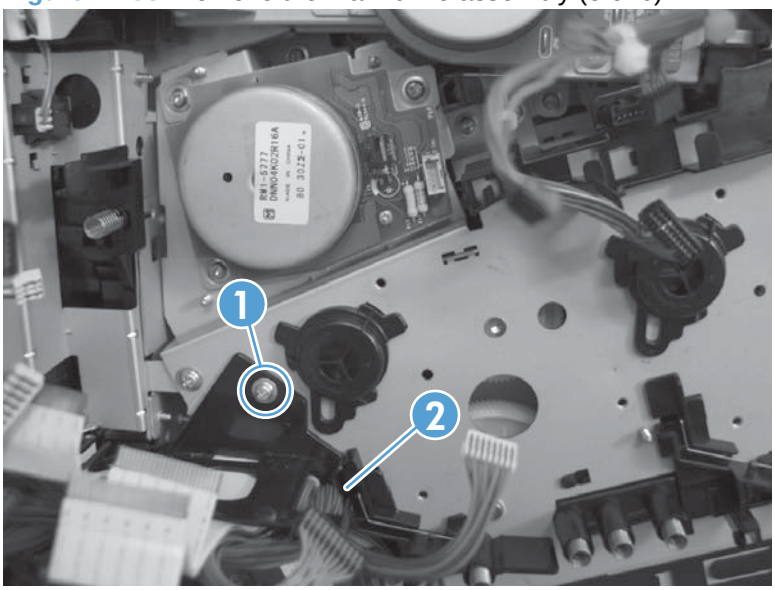

4. Remove 10 screws.

Figure 2-199 Remove the main-drive assembly (4 of 6)

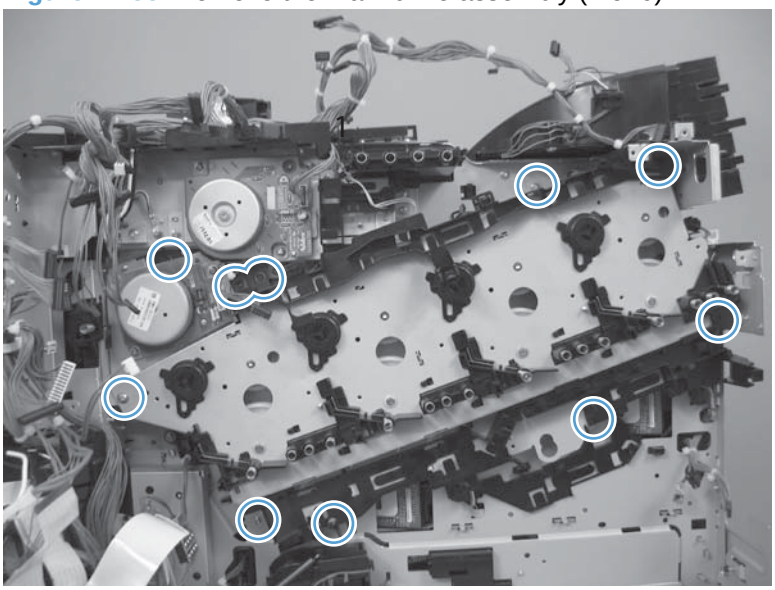

5. Separate the main-drive assembly from the product.

Figure 2-200 Remove the main-drive assembly (5 of 6)

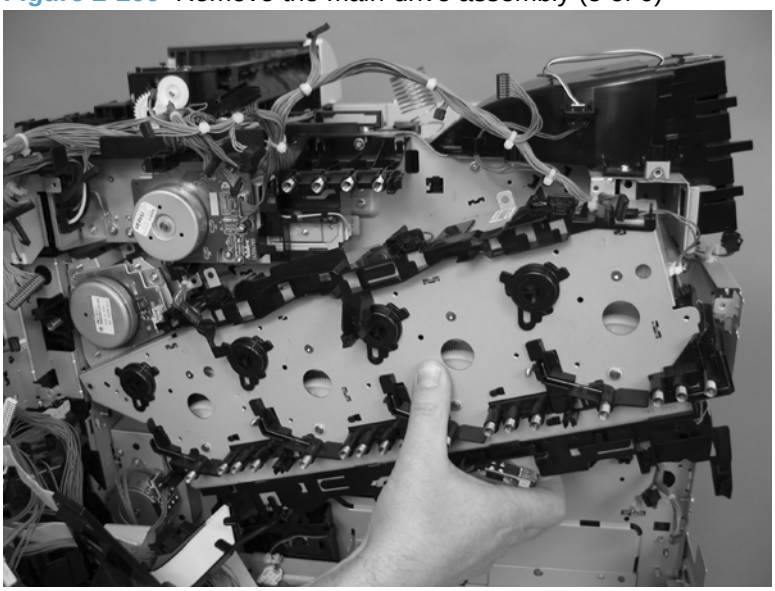

6. Release the wire harness (callout 1) from the guides, and then remove the main-drive assembly from the product.

Reinstallation tip It might be easier to pass this harness over the edge of the assembly chassis after the main-drive assembly is reinstalled.

Figure 2-201 Remove the main-drive assembly (6 of 6)

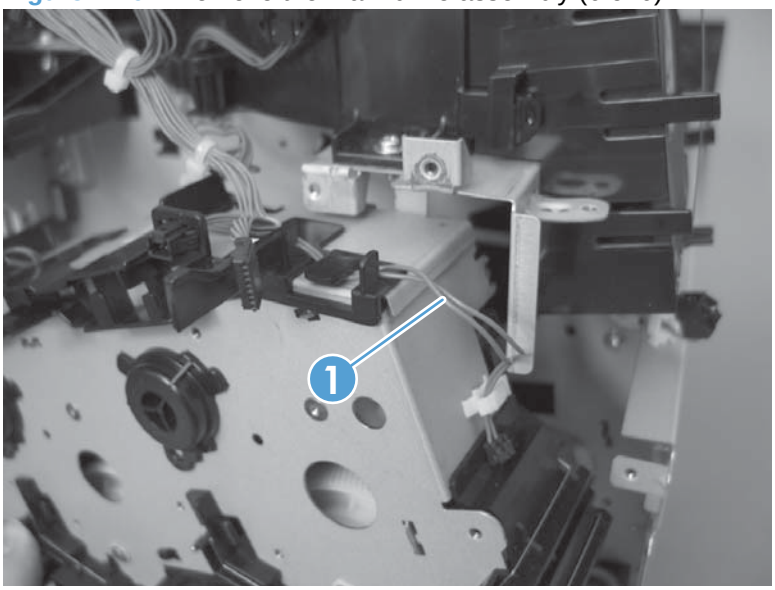

CAUTION: Be careful when you remove the assembly. The cams on the backside of the assembly can be dislodged. If the cams become dislodged, install them on the shafts as shown in Figure 2-202 Reinstall the main-drive assembly (1 of 7) on page 207.

The black cam must be installed on the shaft furthest away from the developing-disengagement motor. The white cams are interchangeable.

Reinstall the main-drive assembly

1. Locate the cams (callout 1) on the back side of the assembly.

   Figure 2-202 Reinstall the main-drive assembly (1 of 7)

   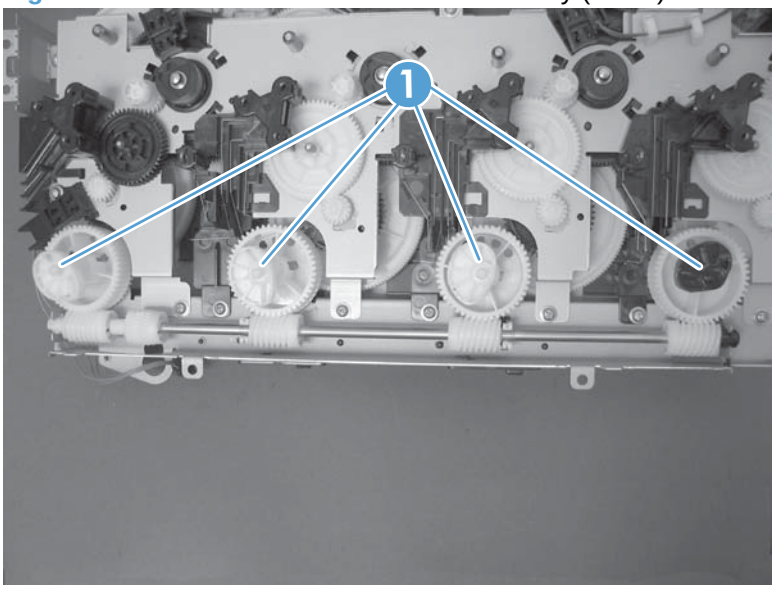

2. Slowly rotate the shaft near the black cam.

   ⚠ **WARNING!** Do not touch the plastic gears or cams. You must not wipe away any of the grease that is applied to these components. Always rotate the gears and cams by rotating the metal drive shaft.

   Figure 2-203 Reinstall the main-drive assembly (2 of 7)

   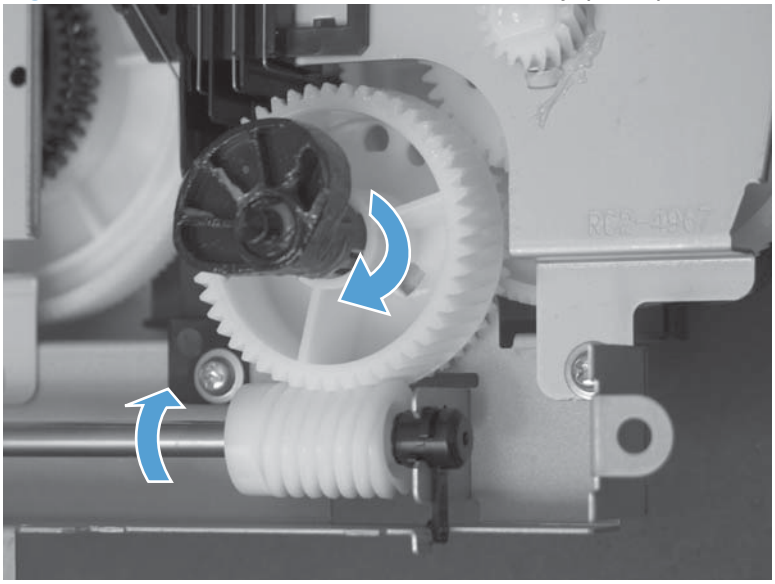

3. Continue to rotate the shaft until the holes in the black-cam gear align as shown below.

When correctly aligned, the *bottom-most* hole in the gear is aligned with a hole in the sheet-metal chassis.

NOTE: The holes in the other cam gears have a different alignment. You must make sure that the holes in the black-cam gear are correctly aligned.

Figure 2-204 Reinstall the main-drive assembly (3 of 7)

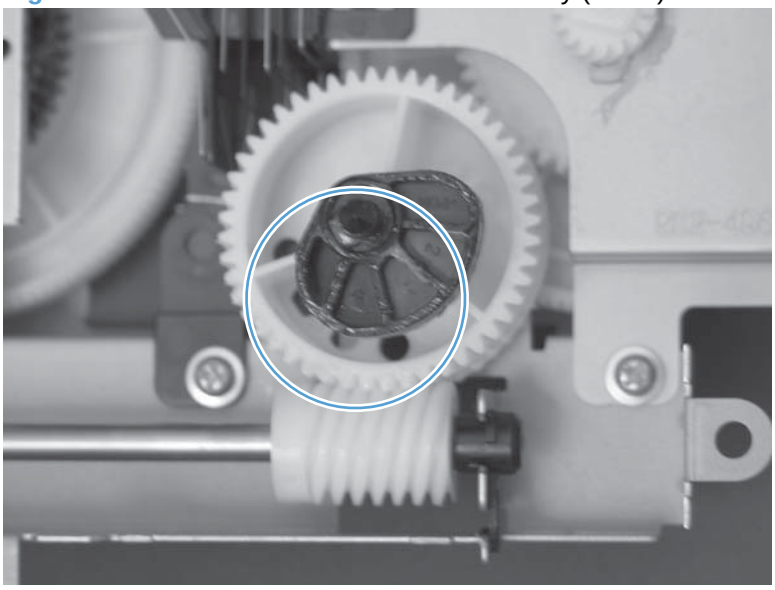

4. Verify that the cams (callout 1) align correctly.

TIP: The second cam in from the right (the white cam to the left of the black cam), should have the *second* hole aligned with the hole in the sheet-metal chassis.

The third cam in from the right, should have the *third* hole aligned with the hole in the sheet-metal chassis.

The fourth cam in from the right (the cam nearest the developing-disengagement motor), should have the *fourth* hole aligned with the hole in the sheet-metal chassis.

If the second, third, or fourth cams do not correctly align, do the following. Hold the long drive shaft, gently tilt the cam and gear away from the shaft to allow clearance to rotate the gear until the correct hole in the gear aligns with the hole in the chassis.

Figure 2-205 Reinstall the main-drive assembly (4 of 7)

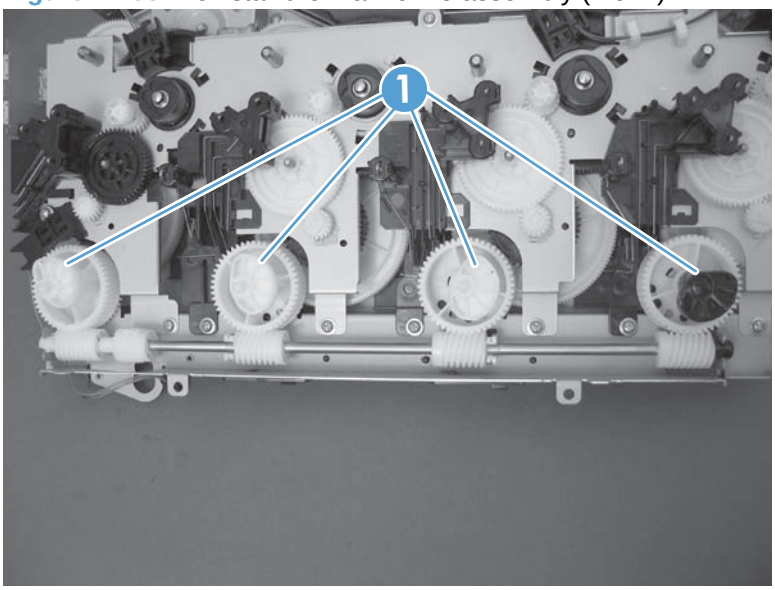

5. When the cams align correctly, they easily fit into the holes in the chassis.

Figure 2-206 Reinstall the main-drive assembly (5 of 7)

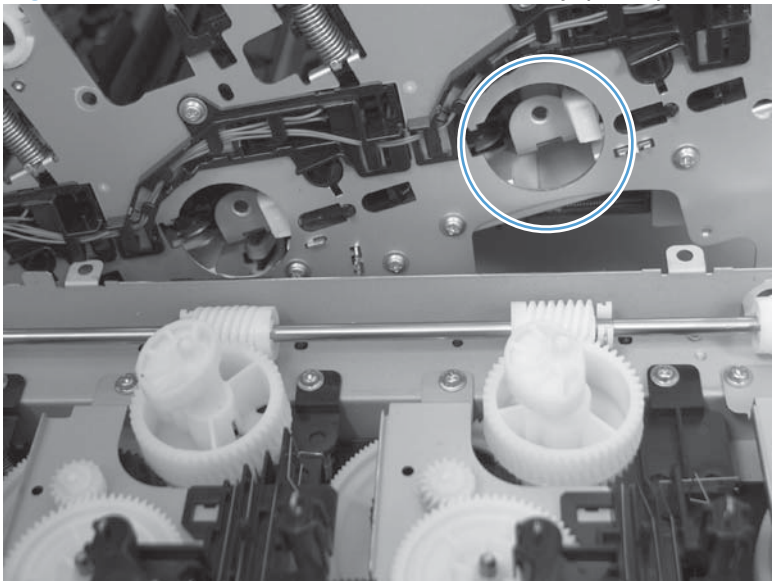

6. When placing the assembly on the chassis, align the holes in the assembly with the holes in the chassis.

Reinstallation tip If the upper-left corner of the assembly is difficult to seat, you might need to rotate the ITB motor to align the gear shaft with the hole in the chassis.

Figure 2-207 Reinstall the main-drive assembly (6 of 7)

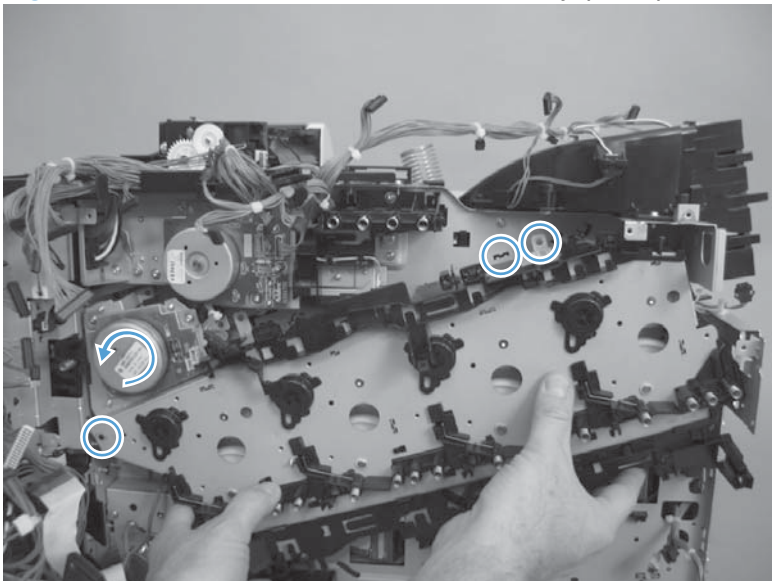

7. When the assembly is correctly installed, the tabs are flat against the chassis.

Figure 2-208 Reinstall the main-drive assembly (7 of 7)

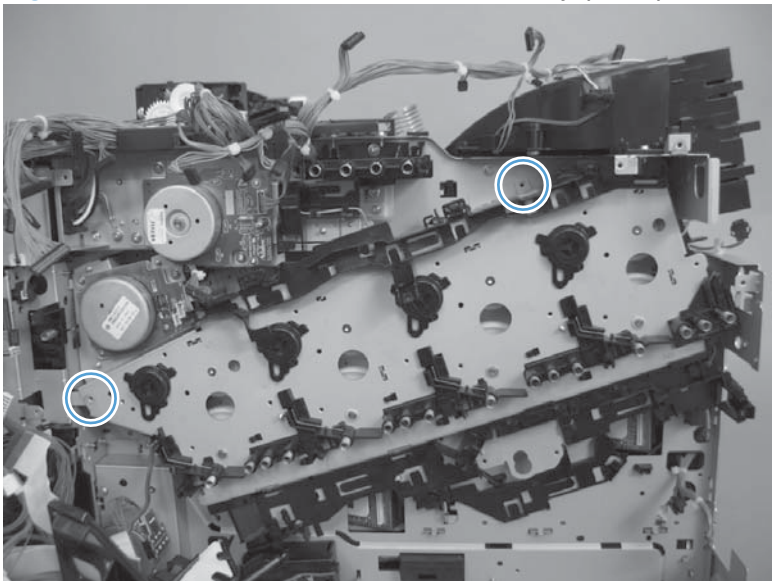

TIP: After reassembling the product, use the **DIAGNOSTICS** menu to print a **COLOR BAND TEST** page.

If the test page shows one or more color planes are not printing (usually in the upper left corner of the page), the cam or cams for the missing color plane are not correctly aligned. Repeat the reinstall the main-drive assembly procedure.

Fuser-drive assembly

NOTE: Removing the fuser-drive assembly typically requires more than 2 hours to complete.

Before proceeding, remove the following components:

- Formatter. See Formatter PCA on page 78.
- Fuser. See Fuser on page 85.
- Upper-left cover. See Upper-left cover on page 96.
- Power-supply cover. See Power-supply cover on page 98.
- Left cover. See Left cover on page 99.
- Front-top cover. See Front-top cover on page 100.
- Rear-top cover. See Rear-top cover on page 102.
- Rear cover. See Rear cover on page 112.
- Interconnect board (ICB). See Interconnect board (ICB) on page 153.
- Low-voltage power supply. See Low-voltage power supply (LVPS) on page 157.
- DC controller PCA. See DC controller PCA and tray on page 161.
- High-voltage power supply lower. See High-voltage power supply lower (HVPS-D) on page 163.
- Exhaust fan and fan duct. See Exhaust fan and fan duct on page 169.
- High-voltage power supply upper. See High-voltage power supply upper (HVPS-T) on page 196.
- Main-drive assembly. See Main-drive assembly on page 203.

Remove the fuser-drive assembly

1. Remove one screw (callout 1), and then remove the cover (callout 2).

   Figure 2-209 Remove the fuser-drive assembly (1 of 7)

   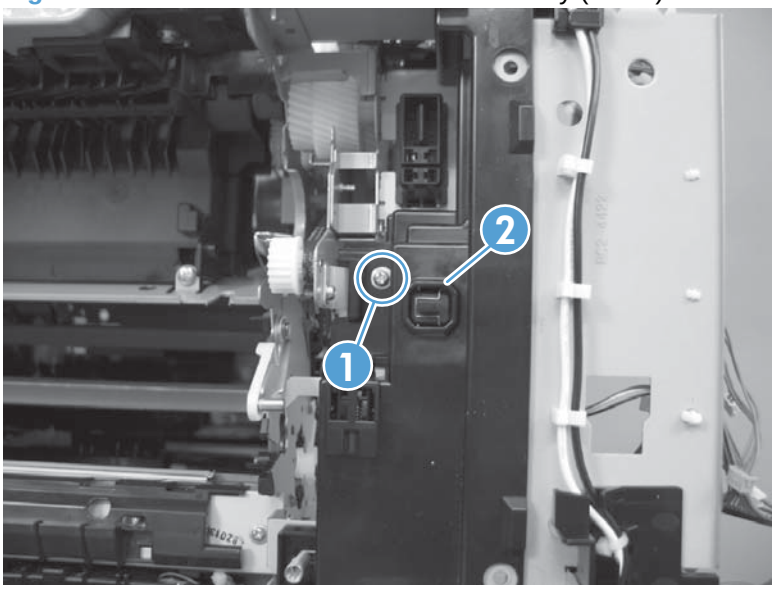

2. Release the wire harness (callout 1) from the guides.

   Figure 2-210 Remove the fuser-drive assembly (2 of 7)

   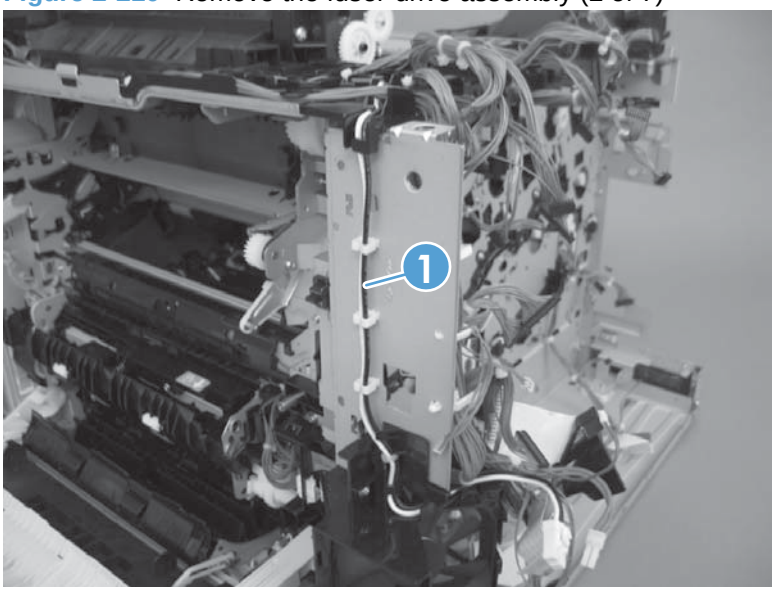

3. Remove two screws (callout 1), one static wire (callout 2), and one switch (callout 3).

Figure 2-211 Remove the fuser-drive assembly (3 of 7)

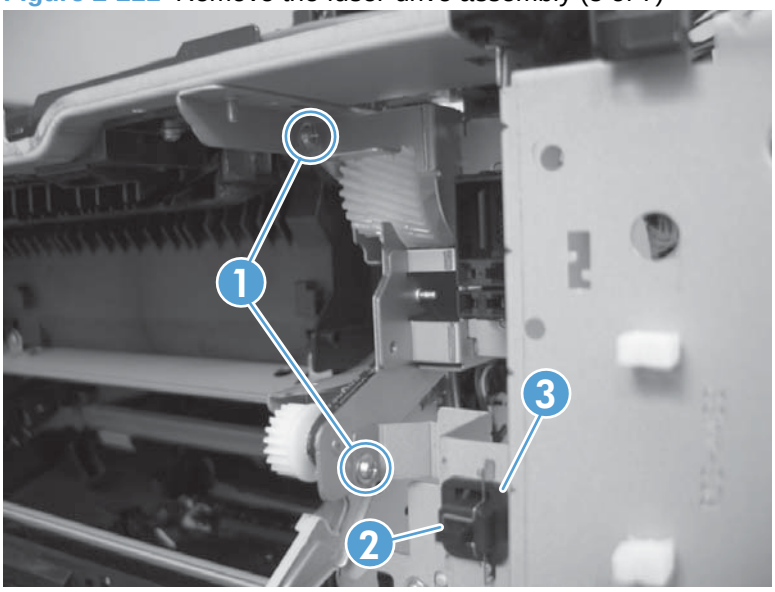

4. Release one tab, and then slide the wire harness holder (callout 1) to release it from the fuser-drive assembly.

NOTE: Releasing the wire harness provides clearance when the assembly is removed. The harness does not need to be removed.

Figure 2-212 Remove the fuser-drive assembly (4 of 7)

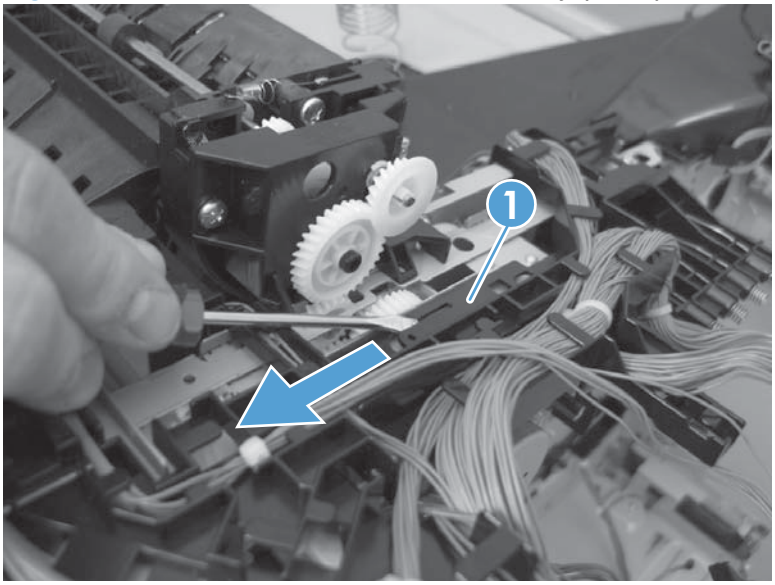

5. Disconnect two connectors.

Figure 2-213 Remove the fuser-drive assembly (5 of 7)

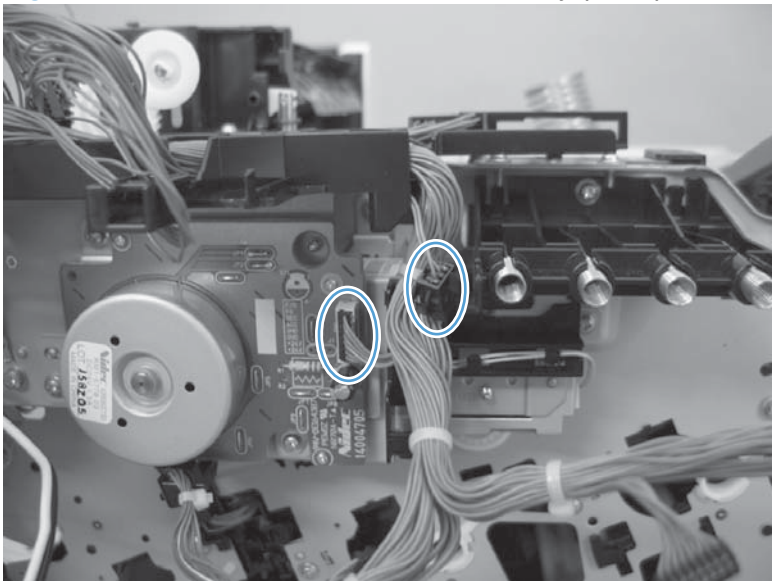

6. Remove three screws.

Figure 2-214 Remove the fuser-drive assembly (6 of 7)

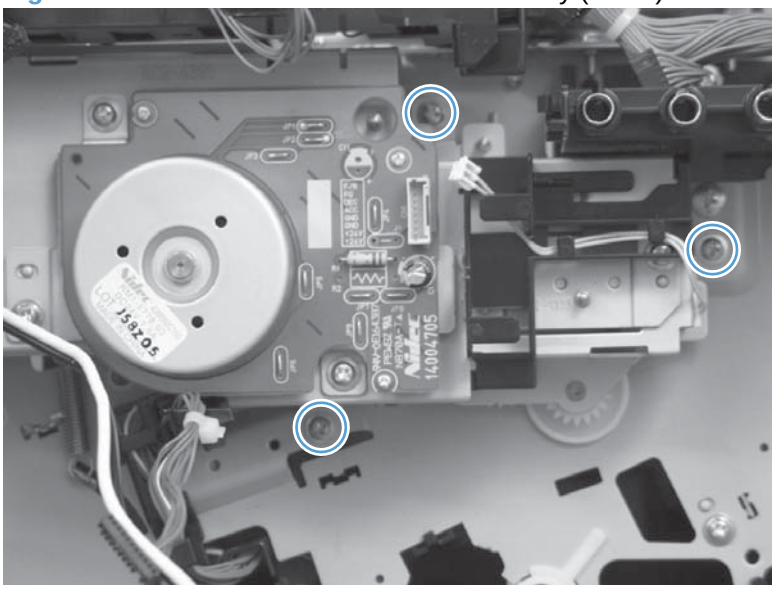

7. Carefully remove the assembly.

Figure 2-215 Remove the fuser-drive assembly (7 of 7)

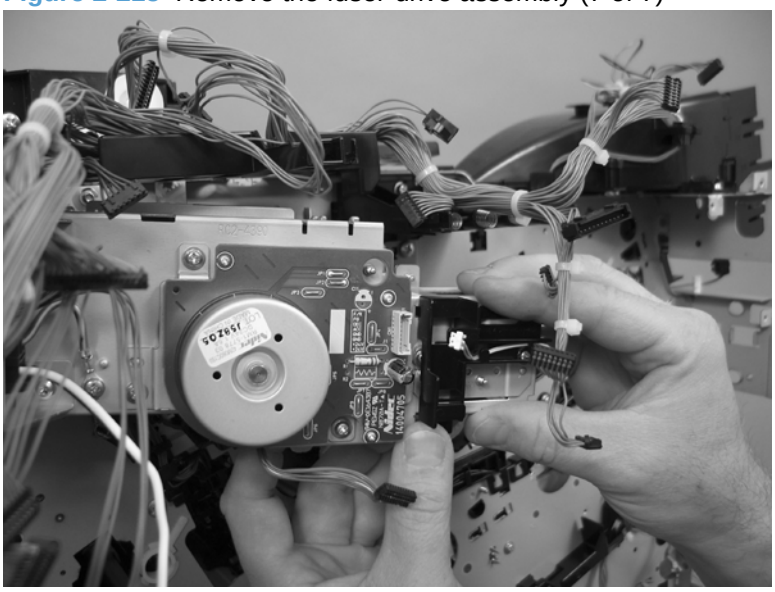

Reinstall the fuser-drive assembly

Rotate the motor until the gears align, and the assembly is flat against the chassis.

Figure 2-216 Reinstall the fuser-drive assembly

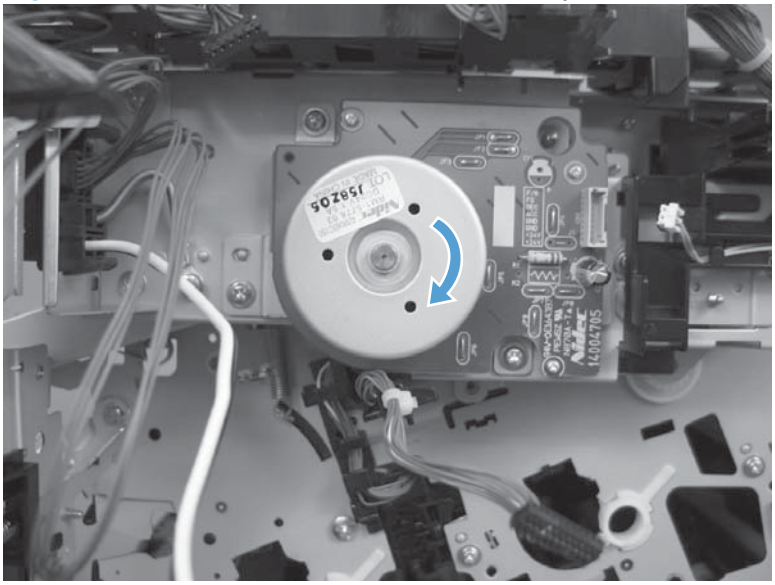

Optional paper feeder assemblies (1 x 500-sheet and 3 x 500-sheet)

NOTE: For information about removing the Tray 3, 4, or 5 feed and separation rollers, see Feed and separation rollers (Trays 2-5) on page 86.

For information about removing the Tray 3, 4, or 5 cassettes, see Tray on page 84.

For information about removing the right door (optional paper feeder), see Right door (optional paper feeder) on page 220

The following procedures apply to both the 1 x 500-sheet optional paper feeder and the 3 x 500-sheet optional paper unless specifically noted.

Front door (optional paper feeder)

1. Release one tab (callout 1), and then remove the stopper (callout 2).

Figure 2-217 Remove the front door (optional paper feeder) (1 of 2)

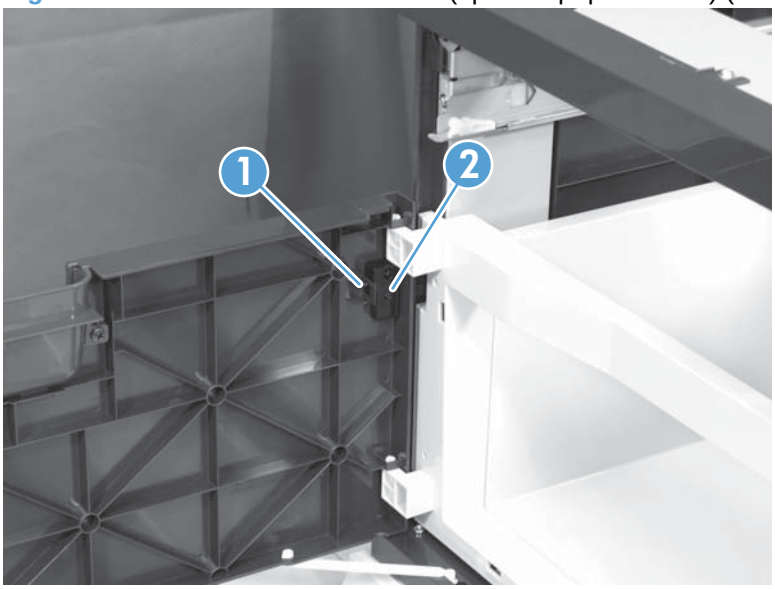

2. Release the link arm (callout 1), and then remove the front door (callout 2).

Figure 2-218 Remove the front door (optional paper feeder) (2 of 2)

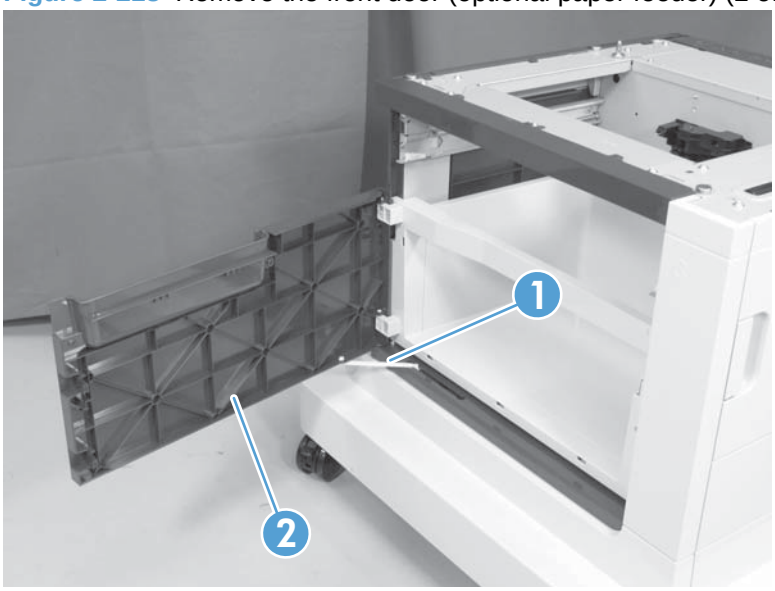

Rear cover (optional paper feeder)

▲ Remove two screws (callout 1), and then remove the rear cover (callout 2).

Figure 2-219 Remove the rear cover (optional paper feeder)

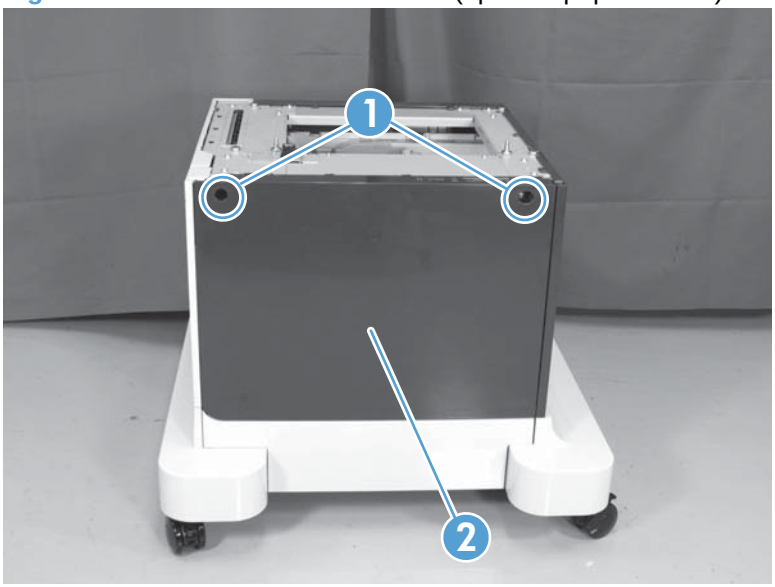

Right-front cover (optional paper feeder)

▲ Open the front and right doors, remove one screw (callout 1), and then lift the right-front cover (callout 2) to remove.

Figure 2-220 Remove the right-front cover (optional paper feeder)

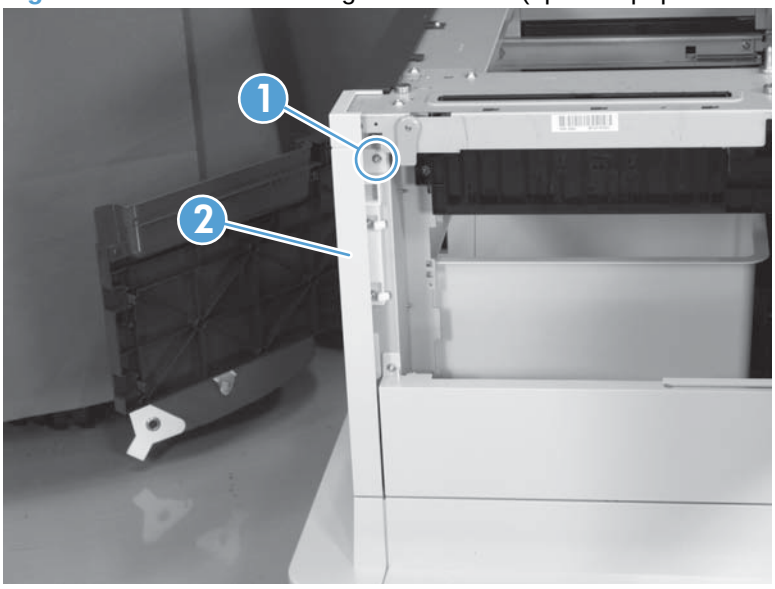

Right door (optional paper feeder)

1. Open the right door, release one tab (callout 1), and then remove the stopper (callout 2)

   Figure 2-221 Remove the right door (optional paper feeder) (1 of 3)

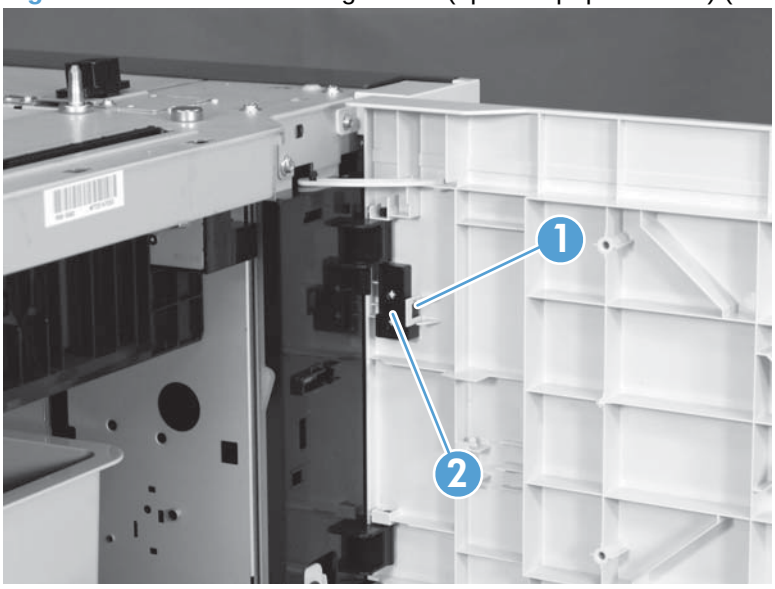

2. Close the right door slightly, and then release the upper link arm.

   Figure 2-222 Remove the right door (optional paper feeder) (2 of 3)

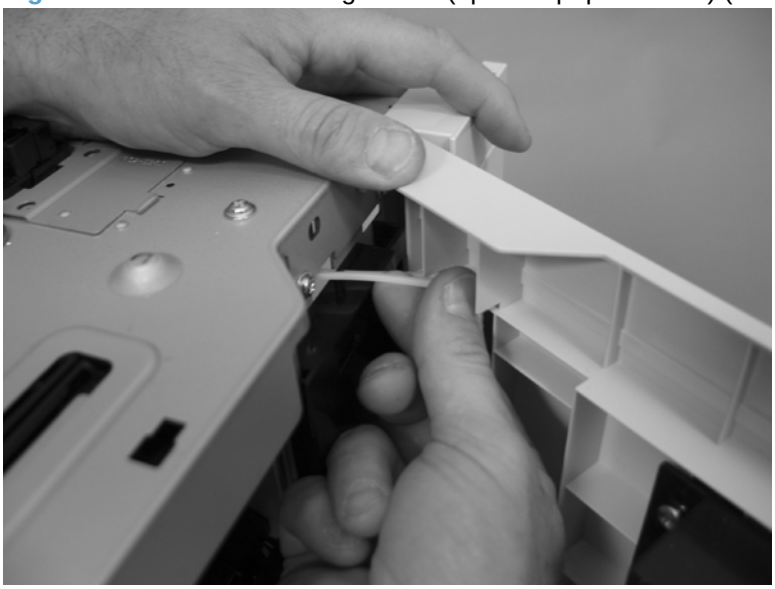

3. Slide the door to release the lower link arm, and then remove the right door.

Figure 2-223 Remove the right door (optional paper feeder) (3 of 3)

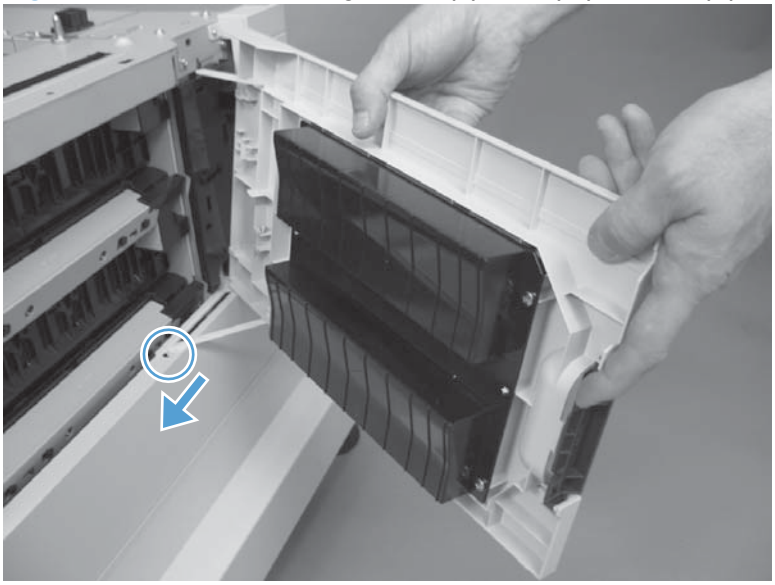

Left cover (optional paper feeder)

Before proceeding, remove the following components:

- Front door (optional paper feeder). See Front door (optional paper feeder) on page 216.
- Right-front cover (optional paper feeder). See Right-front cover (optional paper feeder) on page 219.

Remove the left cover (optional paper feeder)

1. **1 x 500 paper feeder only:** Remove two screws (callout 1), and then remove two bushings (callout 2).

   Figure 2-224 Remove the left cover (optional paper feeder) (1 of 3)

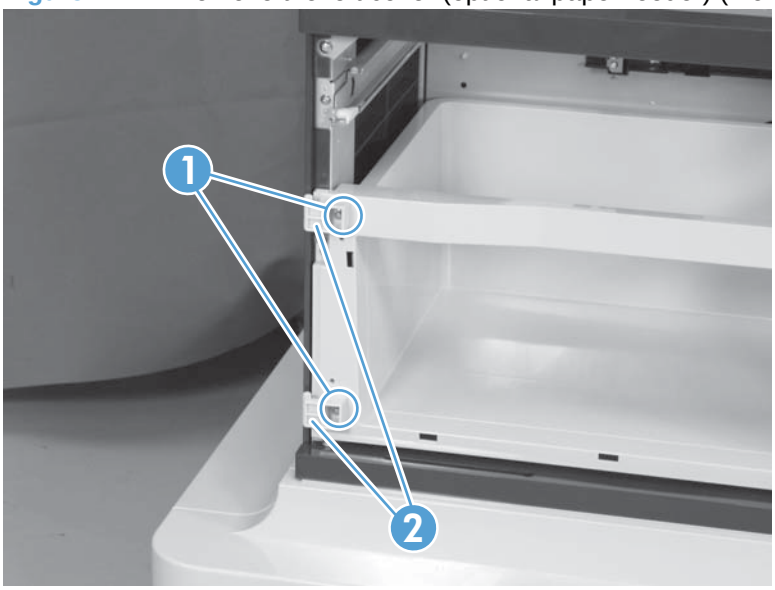

2. **1 x 500 paper feeder only:** Remove three screws (callout 1), and then remove the storage box (callout 2).

Figure 2-225 Remove the left cover (optional paper feeder) (2 of 3)

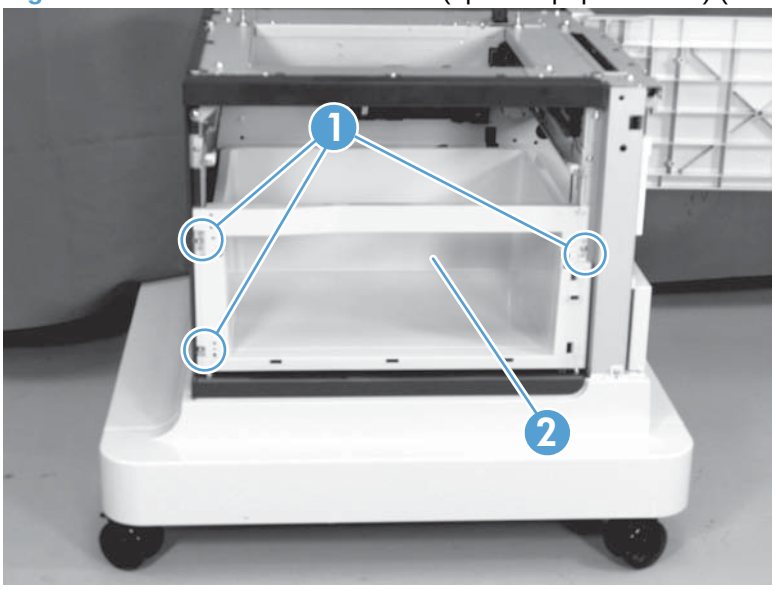

3. Release five tabs (callout 1), and then remove the left cover (callout 2).

Figure 2-226 Remove the left cover (optional paper feeder) (3 of 3)

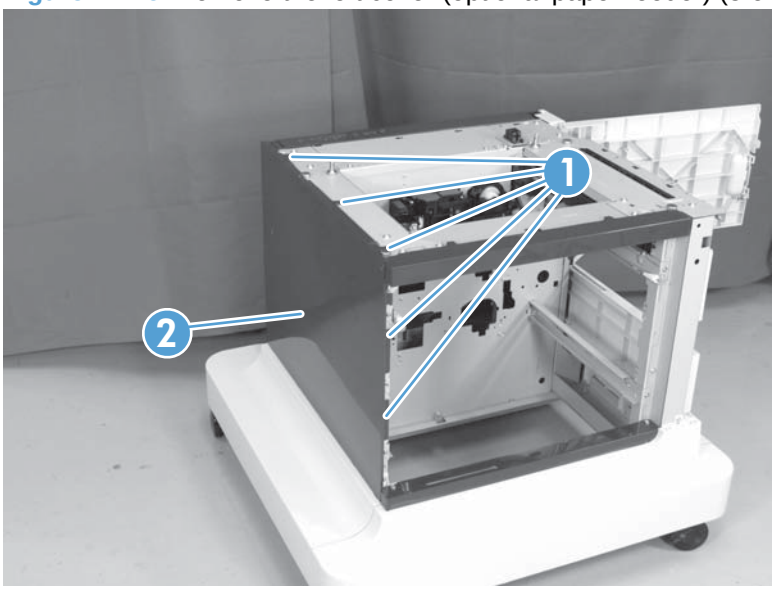

Right cover (optional paper feeder)

Before proceeding, remove the following components:

- Right door (optional paper feeder). See Right door (optional paper feeder) on page 220.

Remove the right cover (optional paper feeder)

▲ Remove two screws (callout 1), release one tab (callout 2), and then remove the right cover (callout 3).

Figure 2-227 Remove the right cover (optional paper feeder)

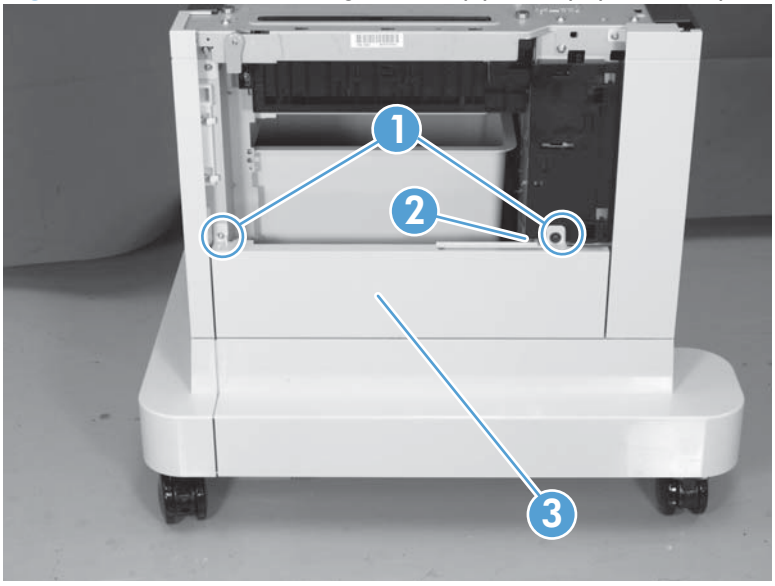

Rear-right cover (optional paper feeder)

Before proceeding, remove the following components:

- Right door (optional paper feeder). See Right door (optional paper feeder) on page 220.

Remove the rear-right cover (optional paper feeder)

▲ Remove one screw (callout 1), and then lift the rear-right cover (callout 2) to remove.

Figure 2-228 Remove the rear-right cover (optional paper feeder)

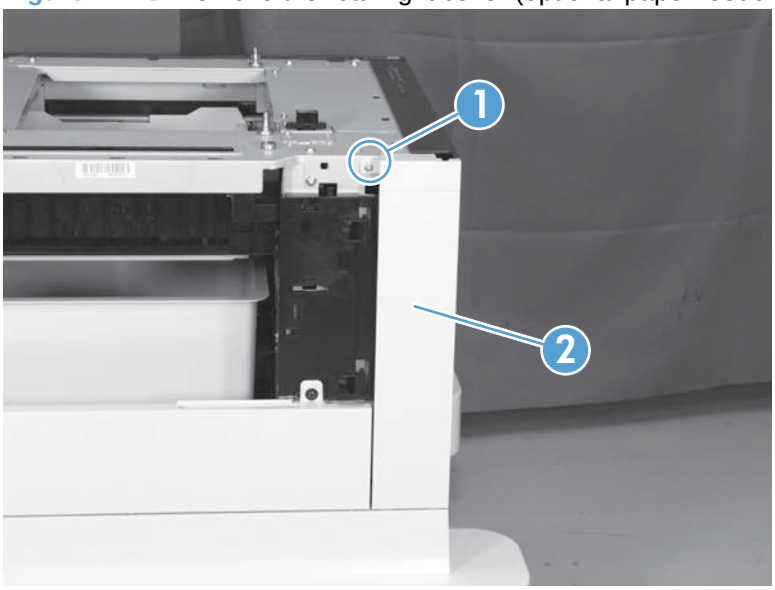

Pickup assembly (optional paper feeder)

Before proceeding, remove the following components:

- Paper feeder right front cover. See Right-front cover (optional paper feeder) on page 219.
- Paper feeder rear cover. See Rear cover (optional paper feeder) on page 218.

NOTE: The following procedure shows steps for removing the pickup assembly for Tray 3. **3 x 500-sheet optional paper feeder only:** The steps for removing the pickup assemblies for Tray 4 and Tray 5 are the same unless noted. You must remove the pickup assemblies in sequence beginning with the pickup assembly for Tray 5.

Remove the pickup assembly (optional paper feeder)

1. Remove one screw (callout 1), and then remove the tray rail (callout 2).

Figure 2-229 Remove the pickup assembly (optional paper feeder) (1 of 5)

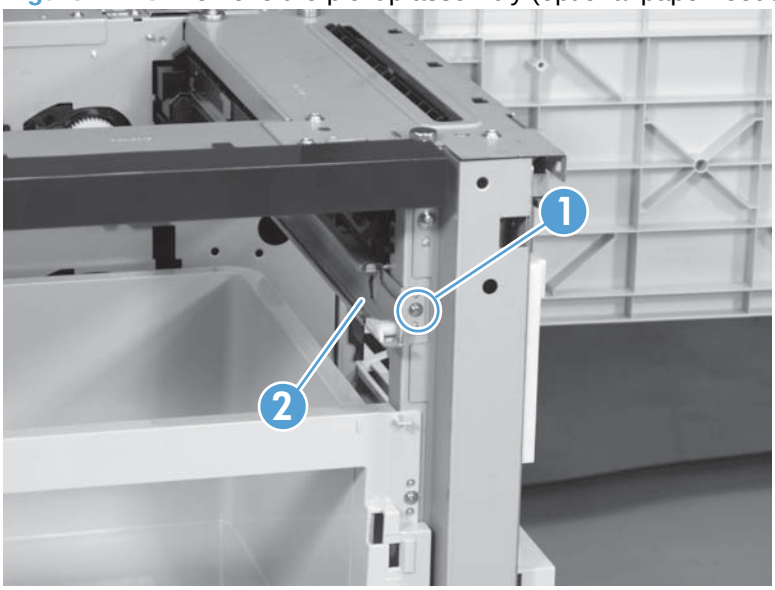

2. **1 x 500-sheet optional paper feeder only:** Remove three screws (callout 1), disconnect one connector (callout 2), and then remove the motor assembly (callout 3).

Figure 2-230 Remove the pickup assembly (optional paper feeder) (2 of 5)

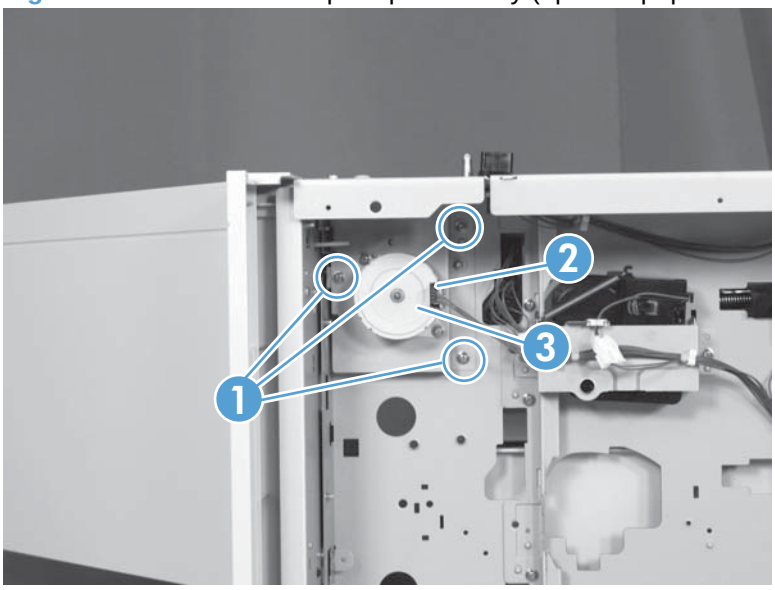

3. **3 x 500-sheet optional paper feeder only:** Remove four screws (callout 1), disconnect two connector (callout 2), and then remove the motor assembly (callout 3).

Figure 2-231 Remove the pickup assembly (optional paper feeder) (3 of 5)

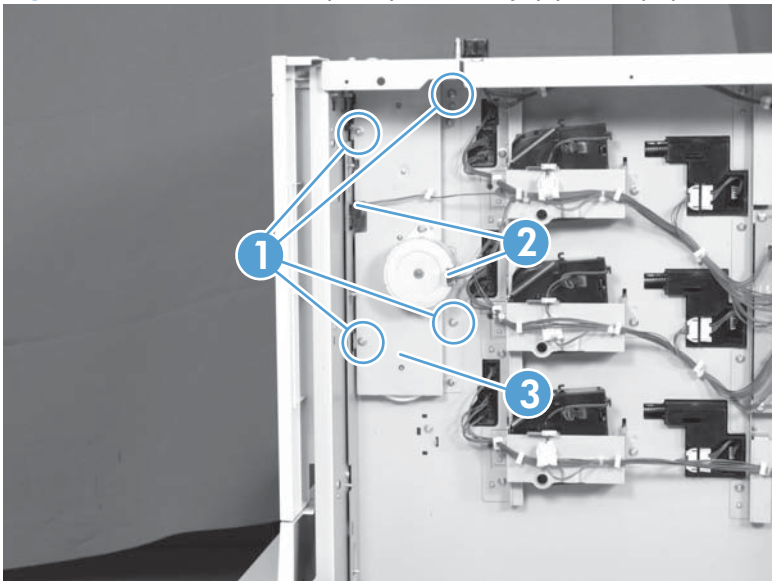

4. Remove one screw (callout 1), and then disconnect three connectors (callout 2).

Figure 2-232 Remove the pickup assembly (optional paper feeder) (4 of 5)

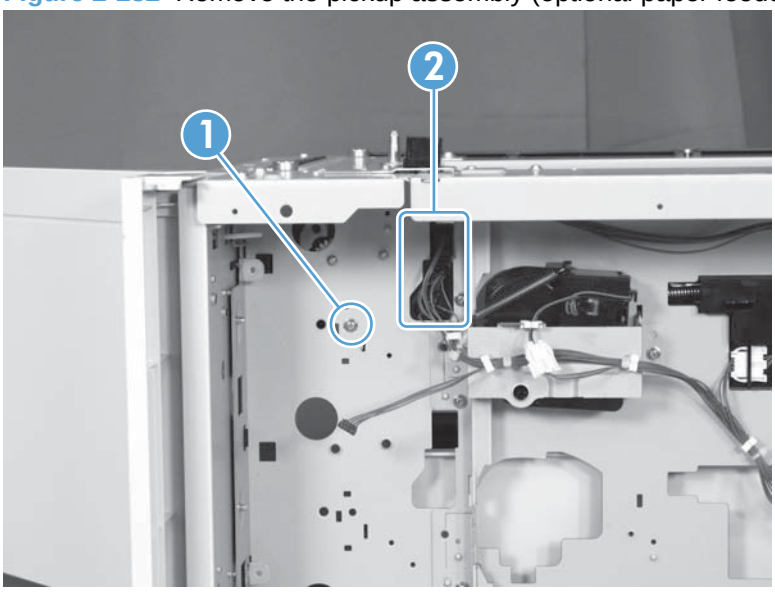

5. Remove one screw (callout 1), and then remove the pickup assembly (callout 2).

Figure 2-233 Remove the pickup assembly (optional paper feeder) (5 of 5)

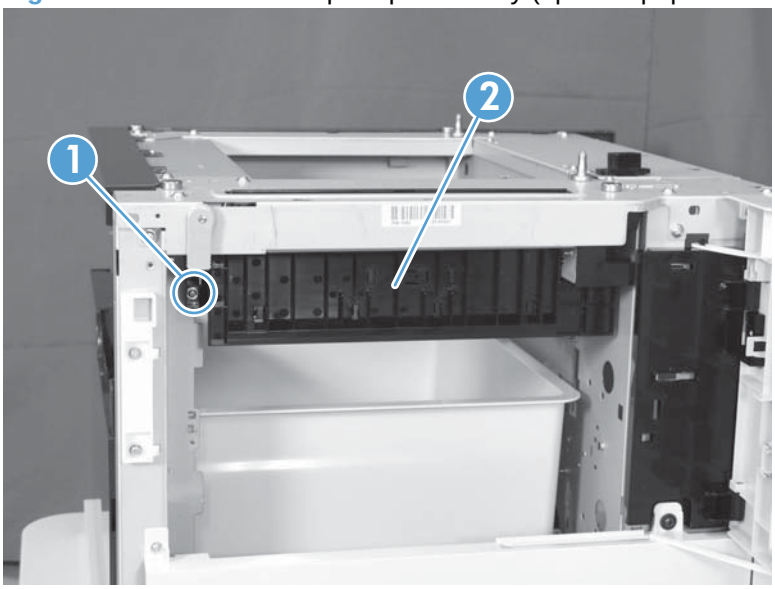

Lifter assembly (optional paper feeder)

Before proceeding, remove the following components:

- Rear cover (optional paper feeder). See Rear cover (optional paper feeder) on page 218.

Remove the lifter assembly (optional paper feeder)

1. Disconnect one connector (callout 1).

   Figure 2-234 Remove the lifter assembly (optional paper feeder) (1 of 2)

   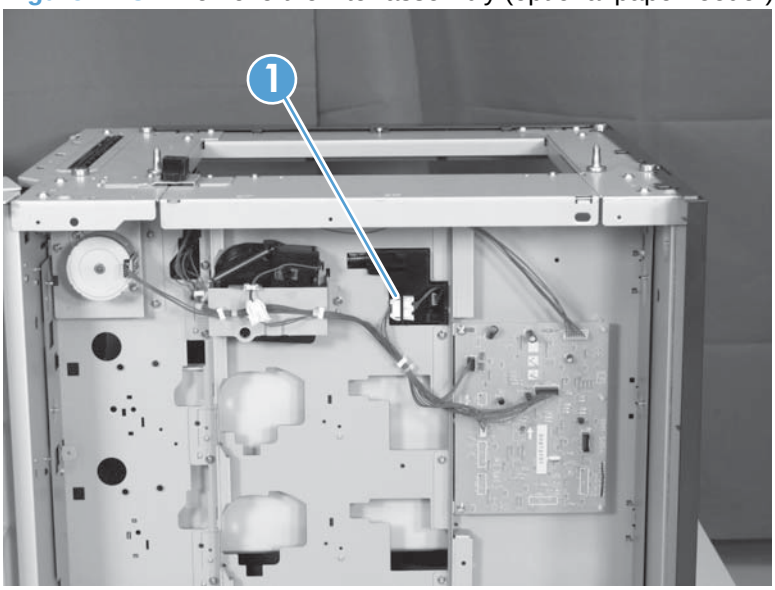

2. Remove four screws (callout 1), and then remove the lifter assembly (callout 2).

   Figure 2-235 Remove the lifter assembly (optional paper feeder) (2 of 2)

   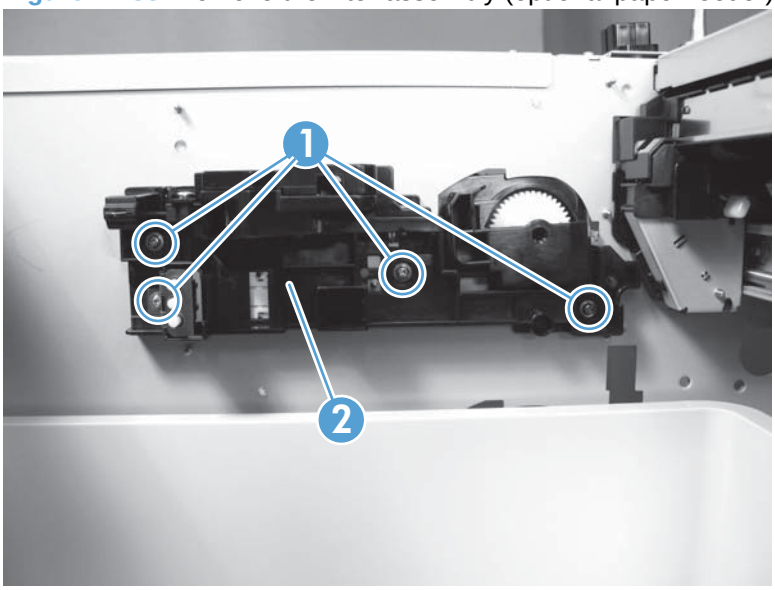

Lifter-drive assembly (optional paper feeder)

Before proceeding, remove the following components:

- Rear cover (optional paper feeder). See Rear cover (optional paper feeder) on page 218.

Remove the lifter-drive assembly (optional paper feeder)

1. Disconnect one connector (callout 1), and then release the wire harnesses (callout 3) from the guides (callout 2).

   Figure 2-236 Remove the lifter-drive assembly (optional paper feeder) (1 of 2)

   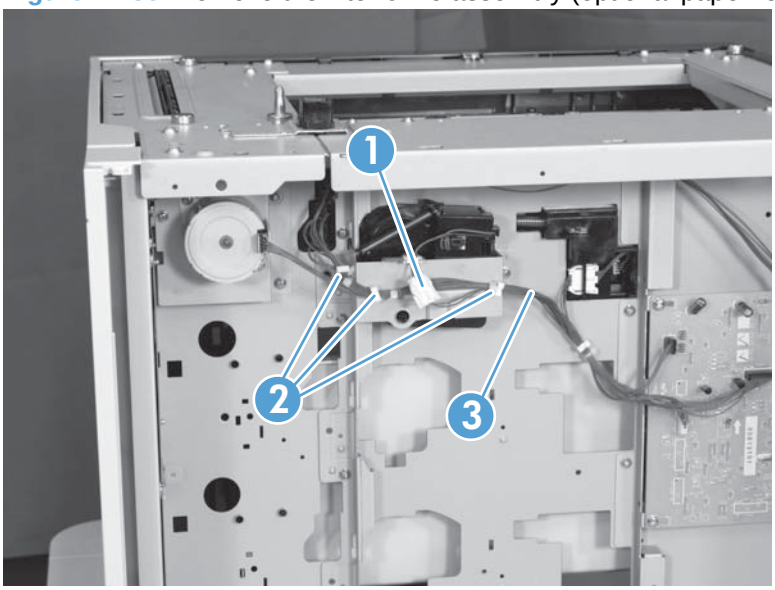

2. Remove two screws (callout 1), and then remove the sheet-metal plate (callout 2). Remove one spring (callout 3), and then remove the lifter drive assembly.

   Figure 2-237 Remove the lifter-drive assembly (optional paper feeder) (2 of 2)

   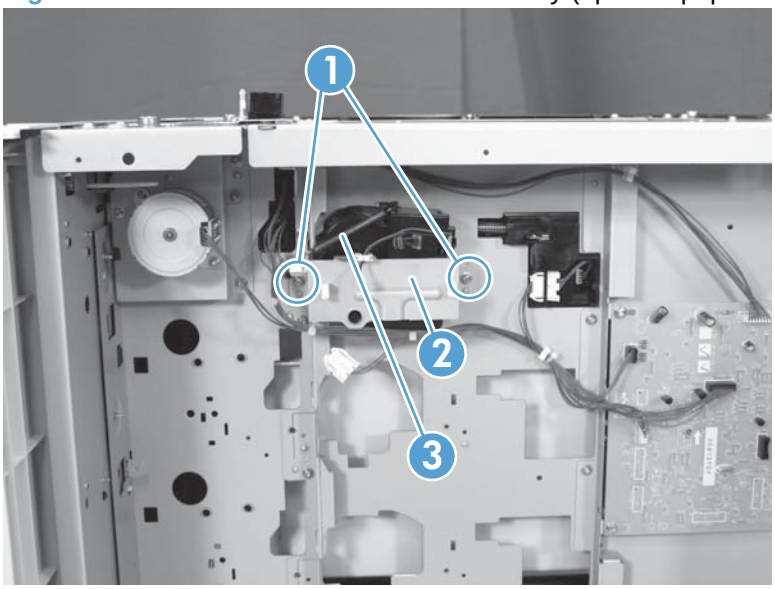

Pickup motor assembly (optional paper feeder)

Before proceeding, remove the following components:

- Rear cover (optional paper feeder). See Rear cover (optional paper feeder) on page 218.

Remove the pickup motor (optional paper feeder) assembly

1. **1 x 500-sheet optional paper feeder only:** Remove three screws (callout 1), disconnect one connector (callout 2), and then remove the motor assembly (callout 3).

   Figure 2-238 Remove the pickup motor assembly (optional paper feeder) (1 of 2)

   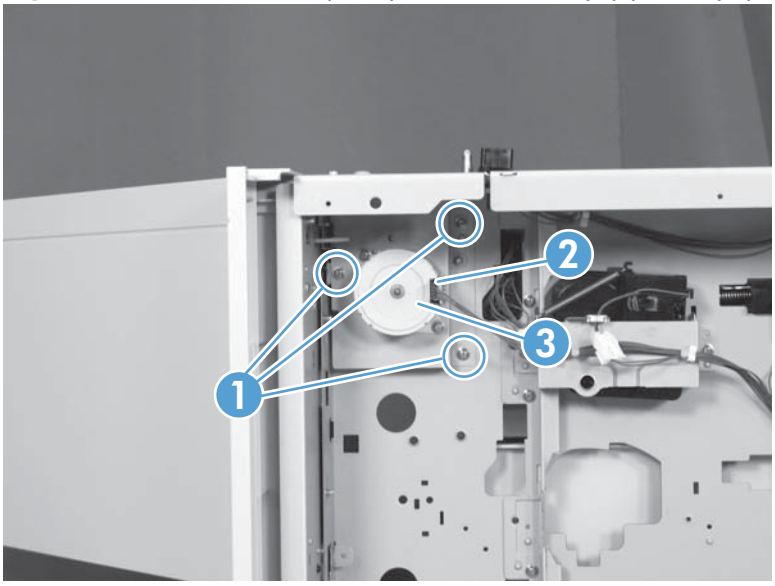

2. **3 x 500-sheet optional paper feeder only:** Remove four screws (callout 1), disconnect two connector (callout 2), and then remove the motor assembly (callout 3).

   Figure 2-239 Remove the pickup motor assembly (optional paper feeder) (2 of 2)

   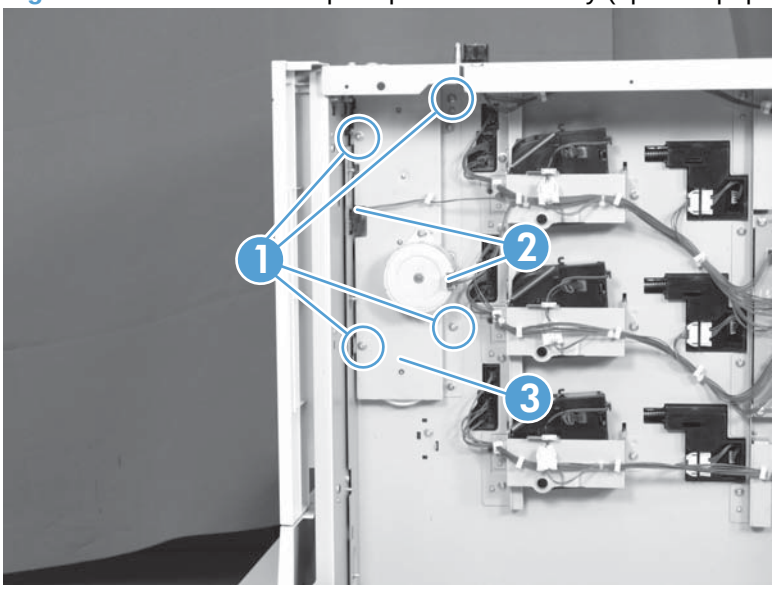

Controller PCA (optional paper feeder)

Before proceeding, remove the following components:

- Rear cover (optional paper feeder). See Rear cover (optional paper feeder) on page 218.

Remove the controller PCA (optional paper feeder)

1. **1 x 500-sheet optional paper feeder only:** Disconnect four connector (callout 2), and then remove two screws (callout 1). Release three tabs (callout 3), and then remove the PCA (callout 4).

   Figure 2-240 Remove the controller PCA (optional paper feeder) (1 of 2)

   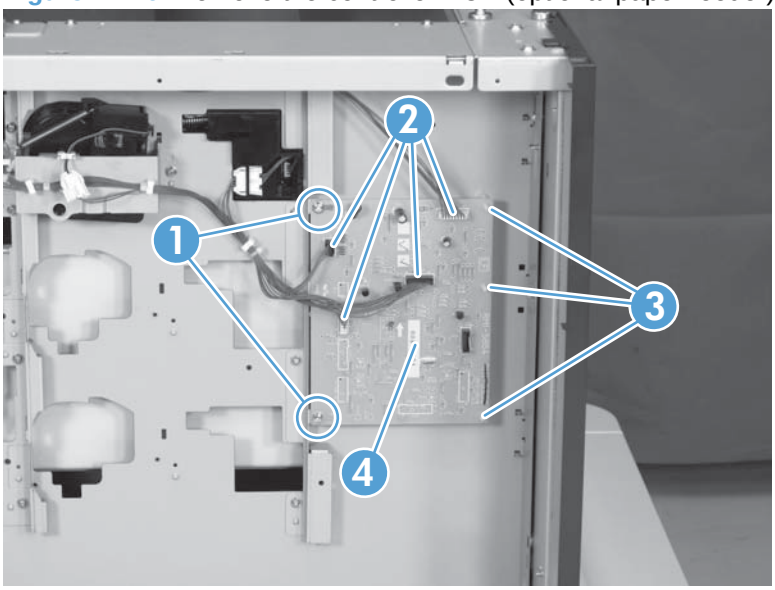

2. **3 x 500-sheet optional paper feeder only:** Disconnect all connectors, and then remove two screws (callout 1). Release three tabs (callout 2), and then remove the PCA (callout 3).

   Figure 2-241 Remove the controller PCA (optional paper feeder) (2 of 2)

   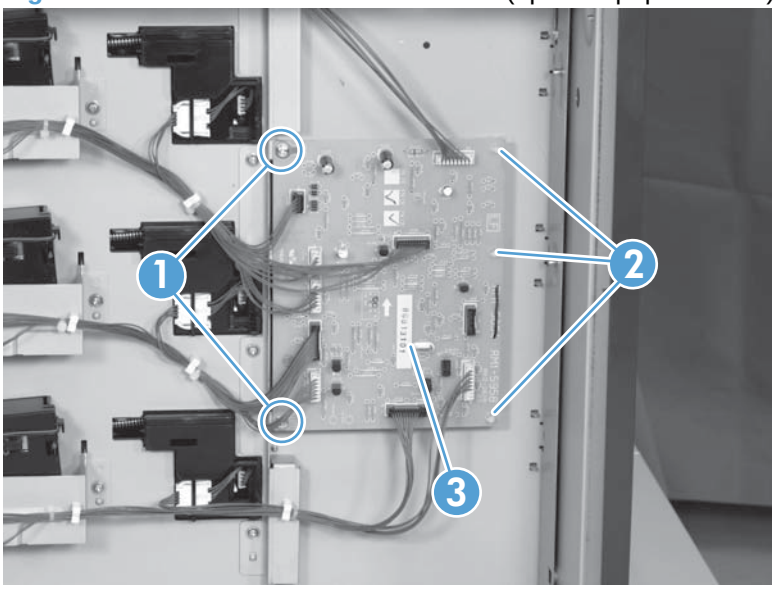

3 Solve problems

To use the information in this chapter, you need to have a basic understanding of the HP LaserJet printing process. Explanations of each mechanical assembly, the printer systems, and the basic theory of operation are contained in Theory of operation on page 1. Do not perform any of these troubleshooting processes unless you understand the function of each product component.

- Solve problems checklist
- Menu map
- Troubleshooting process
- Tools for troubleshooting
- Clear paper jams
- Solve paper-handling problems
- Use manual print modes
- Solve image-quality problems
- Clean the product
- Solve performance problems
- Solve connectivity problems
- Service mode functions
- Product updates

Solve problems checklist

If the product is not responding correctly, complete the steps in the following checklist, in order. If the product does not pass a step, follow the corresponding troubleshooting suggestions. If a step resolves the problem, you can stop without performing the other steps on the checklist.

1. Make sure that the control-panel display shows one of the following messages: **Ready**, **PAUSED**, or **SLEEP MODE ON**. If no lights are illuminated or the display does not say **Ready**, **PAUSED**, or **SLEEP MODE ON**, see Power subsystem on page 240.

2. Check the cables.

   a. Check the cable connection between the product and the computer or network port. Make sure that the connection is secure.

   b. Make sure that the cable itself is not faulty by using a different cable, if possible.

   c. Check the network connection. See Solve connectivity problems on page 418.

3. Ensure that the print media that you are using meets specifications.

4. Print a configuration page. If the product is connected to a network, an HP Jetdirect page also prints.

   a. If the pages do not print, check that at least one tray contains print media.

   b. If the page jams in the product, see Clear paper jams on page 383.

5. If the configuration page prints, check the following items.

   a. If the page prints correctly, the product hardware is working. The problem is with the computer you are using, with the printer driver, or with the program.

   b. If the page does not print correctly, the problem is with the product hardware.

6. Does the image quality meet the user's requirements? If yes, see step 7. If no, check the following items:

   - Print the print-quality (PQ) troubleshooting pages. See Print-quality-troubleshooting pages on page 302 in this chapter.

   - Solve the print-quality problems, and then see step 7.

7. At the computer, check to see if the print queue is stopped, paused, or set to print offline.

   Windows: Click **Start**, click **Settings**, and then click **Printers** or **Printers and Faxes**. Double-click **HP Color LaserJet CP4525**.

   -or-

   Mac OS X: Open **Printer Setup Utility**, and then double-click the line for the **HP Color LaserJet CP4525**.

8. Verify that you have installed the HP Color LaserJet Enterprise CP4020-CP4520 Series printer driver. Check the program to make sure that you are using the HP Color LaserJet Enterprise CP4020-CP4520 Series printer driver.

9. Print a short document from a different program that has worked in the past. If this solution works, the problem is with the program that you are using. If this solution does not work (the document does not print) complete these steps:

   a. Try printing the job from another computer that has the product software installed.

   b. If you connected the product to the network, connect the product directly to a computer with a USB cable. Redirect the product to the correct port, or reinstall the software, and select the new connection type that you are using.

Menu map

Print a menu map

1. Press the OK button to open the menus.
2. Use the arrow buttons to navigate to the **INFORMATION** submenu, and then press the OK button.
3. Use the arrow buttons to navigate to the **PRINT MENU MAP** submenu, and then press the OK button to print the menu structure.
4. Press the back arrow ⮌ to exit the menus.

Troubleshooting process

Determine the problem source

When the product malfunctions or encounters an unexpected situation, the product control panel alerts you to the situation. This section contains a pre-troubleshooting checklist to filter out many possible causes of the problem. A troubleshooting flowchart helps you diagnose the root cause of the problem. The remainder of this chapter provides steps for correcting problems.

- Use the pre-troubleshooting checklist to evaluate the source of the problem and to reduce the number of steps that are required to fix the problem.
- Use the troubleshooting flowchart to pinpoint the root cause of hardware malfunctions. The flowchart guides you to the section of this chapter that contains steps for correcting the malfunction.

Before beginning any troubleshooting procedure, check the following issues:

- Are supply items within their rated life?
- Does the configuration page reveal any configuration errors?

NOTE: The customer is responsible for checking supplies and for using supplies that are in good condition.

Pre-troubleshooting checklist

The list below describes basic questions to ask the customer to help quickly define the problem or problems.

Table 3-1 Pre-troubleshooting checklist

Environment	• Is the product installed on a solid, level surface? • Is the product exposed to particle matter or dust? • Is the power-supply voltage within ± 10 volts of the specified power source? • Is the power supply plug inserted in the product and directly to the wall outlet (not a power strip)? • Is the operating environment within the specified parameters, as listed in chapter 1 of this manual? • Is the product exposed to ammonia gas, such as that produced by diazo copiers or office cleaning materials? • Is the product exposed to direct sunlight?
Media	• Does the customer use only supported media? • Is the media in good condition (contains no curls, folds, and so forth)? • Is the media stored correctly and within environmental limits?

Table 3-1 Pre-troubleshooting checklist (continued)

Input trays	• Is the amount of media in the tray within specifications? • Is the media correctly placed in the tray? • Are the paper guides aligned with the stack? • Is the paper tray correctly installed in the product?
Print cartridges	• Is each print cartridge installed correctly? • Are original HP print cartridges installed? • Are the cartridges damaged?
ITB and fuser	• Are the ITB and fuser correctly installed? • Is the ITB or fuser damaged?
Covers	• Are the right and front doors closed?
Condensation	• Does condensation occur following a temperature change (particularly in winter following cold storage)? If so, wipe the affected area dry or leave the product on for 10 to 20 minutes. • Was a print cartridge installed soon after being moved from a cold to a warm room? If so, allow the product to sit at room temperature for one to two hours.
Miscellaneous	• Check for and remove any non-HP components (print cartridges, memory modules, and EIO cards) from the product. • Remove the product from the network, and make sure that the failure is with the product before beginning troubleshooting. • For any print-quality issues, calibrate the product. See Calibrate the product on page 313.

Troubleshooting flowchart

This flowchart highlights the general processes that you can follow to quickly isolate and solve product hardware problems.

Each row depicts a major troubleshooting step. A “yes” answer to a question allows you to proceed to the next major step. A “no” answer indicates that more testing is needed. Go to the appropriate section in this chapter, and follow the instructions there. After completing the instructions, go to the next major step in this troubleshooting flowchart.

Table 3-2 Troubleshooting flowchart

1 **Power on**	Is the product on and does a readable message display?		Follow the power-on troubleshooting checks. See Power subsystem on page 240. After the control panel display is functional, see step 2.
	Yes ↓	No →	
2 **Control panel messages**	Does the message **Ready** display on the control panel?		If an error message displays, see Interpret control-panel messages on page 345. After the errors have been corrected, go to step 3.
	Yes ↓	No →	
3 **Event log**	Open the **DIAGNOSTICS** menu and print an event log to see the history of errors with this product. Does the event log print?		If the event log does not print, see Print an event log on page 376. If paper jams inside the product, see Clear paper jams on page 383. If error messages display on the control panel when you try to print an event log, see Interpret control-panel messages on page 345. After successfully printing and evaluating the event log, see step 4.
	Yes ↓	No →	
4 **Information pages**	Open the **INFORMATION** menu and print the configuration pages to verify that all the accessories are installed. Are all the accessories installed?		If accessories that are installed are not listed on the configuration page, remove the accessory and reinstall it. After evaluating the configuration pages, see step 5.
	Yes ↓	No →	
5 **Image quality**	Does the print quality meet the customer's requirements?		Compare the images with the sample defects in the image defect tables. See Image defects table on page 410. After the print quality is acceptable, see step 6.
	Yes ↓	No →	
6 **Interface**	Can the customer print successfully from the host computer?		Verify that all I/O cables are connected correctly and that a valid IP address is listed on the Jetdirect configuration page. If error messages display on the control panel, see Interpret control-panel messages on page 345. When the customer can print from the host computer, this is the end of the troubleshooting process.
	Yes. This is the end of the troubleshooting process.	No →	

Power subsystem

Power-on checks

The basic product functions should start up when the product is plugged into an electrical outlet and the power switch is pushed to the *on* position. If the product does not start, use the information in this section to isolate and solve the problem.

Power-on troubleshooting overview

Turn on the product power. If the control panel display remains blank, random patterns display, or asterisks remain on the control panel display, perform power-on checks to find the cause of the problem.

During normal operation, the main cooling fan begins to spin briefly after the product power is turned on. Place your hand over the holes in the left-side cover, near the formatter. If the fan is operating, you will feel air passing out of the product. You can also lean close to the product and hear the fan operating. You can also place your hand over the hole in the right-rear lower corner. If the fan is operating, you should feel air being drawn into the product. When this fan is operational, the DC side of the power supply is functioning correctly.

After the fan is operating, the main motor turns on (unless the right or front cover is open, a jam condition is sensed, or the paper-path sensors are damaged). You might be able to visually and audibly determine if the main motor is turned on.

If the fan and main motor are operating correctly, the next troubleshooting step is to isolate print engine, formatter, and control panel problems. Perform an engine test (see Engine-test button on page 244). If the formatter is damaged, it might interfere with the engine test. If the engine-test page does not print, try removing the formatter and then performing the engine test again. If the engine test is then successful, the problem is almost certainly with the formatter, the control panel, or the cable that connects them.

If the control panel is blank when you turn on the product, check the following items.

1. Make sure that the product is plugged directly into an active electrical outlet (not a power strip) that delivers the correct voltage.
2. Make sure that the power switch is in the *on* position.
3. Make sure that the fan runs briefly, which indicates that the power supply is operational.
4. Make sure that the control panel display wire harness is connected.
5. Make sure that the formatter is seated and operating correctly. Turn off the product and remove the formatter. Reinstall the formatter, and then verify that the heartbeat LED is flashing.
6. Remove any HP Jetdirect or other EIO cards, and then try to turn the product on again.

NOTE: If the control panel display is blank, but the main cooling fan runs briefly after the product power is turned on, try printing an engine-test page to determine whether the problem is with the control-panel display, formatter, or other product components. See Engine-test button on page 244.

Power-on timing (approximate)

- 00.00 seconds; power-button LED illuminates
- 00.10 seconds; control panel backlight illuminates (dim) and engine noises begin
- 00:14 seconds; memory count appears on the control-panel display and fans rotate at high speed

- 00:36 seconds; HP logo appears on the control-panel display
- 00:60 seconds; engine noises stop (you can run engine test at this point)
- 00:83 seconds; Initializing continues
- 00:85 fans rotate at slow speed
- 00:90 seconds; product enters the **Ready** state

Tools for troubleshooting

The section describes the tools that can help you solve problems with your device.

Individual component diagnostics

LED diagnostics

LED, engine, and individual diagnostics can identify and troubleshoot product problems.

Understand lights on the formatter

Three LEDs on the formatter indicate that the product is functioning correctly.

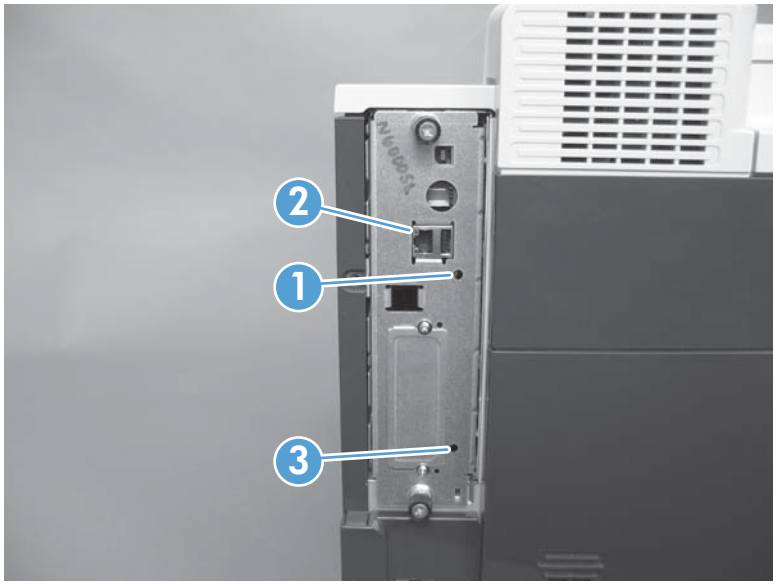

1	Formatter connectivity LED (lit when formatter is correctly seated)
2	HP Jetdirect LEDs
3	Heartbeat LED

HP Jetdirect LEDs

The embedded HP Jetdirect print server has two LEDs. The yellow LED indicates network activity, and the green LED indicates the link status. A blinking yellow LED indicates network traffic. If the green LED is off, a link has failed.

For link failures, check all the network cable connections. In addition, you can try to manually configure the link settings on the embedded print server by using the product control-panel menus.

1. Press the Home button 🏠.
2. Press the down arrow ▼ to highlight the **CONFIGURE DEVICE** menu, and then press the OK button.
3. Press the down arrow ▼ to highlight the **I/O** menu, and then press the OK button.

4. Press the down arrow ▼ to highlight the **EMBEDDED JETDIRECT MENU** option, and then press the OK button.

5. Press the down arrow ▼ to highlight the **LINK SPEED** menu, and then press the OK button.

6. Select the appropriate link speed, and then press the OK button.

Heartbeat LED

The heartbeat LED indicates that the formatter is functioning correctly. While the product is initializing after you turn it on, the LED blinks rapidly, and then turns off. When the product has finished the initialization sequence, the heartbeat LED pulses on and off.

Engine diagnostics

This section provides an overview of the engine diagnostics that are available in the HP Color LaserJet Enterprise CP4020-CP4520 Series product. The product contains extensive internal diagnostics that help in troubleshooting print quality, paper path, noise, component, and timing issues.

Defeating interlocks

Different tests can be used to isolate different types of issues. For component or noise isolation, you can run the diagnostic test when the front and right doors are open. To operate the product with the doors open, the door switch levers must be depressed to simulate a closed-door position.

⚠ **WARNING!** Be careful when performing printer diagnostics to avoid risk of injury. Only trained service personnel should open and run the diagnostics with the covers removed. Never touch any of the power supplies when the printer is turned on.

1. Open the right and front doors.

2. Insert a folded piece of paper into the right-door switch slot.

Figure 3-1 Diagnostic test (1 of 2)

3. Insert a folded piece of paper into each slot at the same time until the product is in a **Ready** state.

Figure 3-2 Diagnostic test (2 of 2)

Disable cartridge check

Use this diagnostic test to print internal pages or send an external job to the product when one or more print cartridges are removed or exchanged. Consumable supply errors are ignored while the product is in this mode. When the product is in this mode, you can navigate the menus and print internal pages or send an external print job to the product. This test can be used isolate problems, such as noise, and to isolate print-quality problems that are related to individual print cartridges.

NOTE: Color cartridges are not keyed and can be interchanged. The black print cartridge is keyed and cannot fit into any other position. An error will display on the control panel if a print cartridge is installed in the wrong position. The **SUPPLIES STATUS** menu will explain which print cartridge is misplaced.

NOTE: Do not remove or exchange print cartridges and image drums until after you start the disable cartridge check diagnostic.

1. Press the Home button.
2. Press the down arrow ▼ to highlight **DIAGNOSTICS**, and then press the OK button.
3. Press the down arrow ▼ to highlight **DISABLE CARTRIDGE CHECK**, and then press the OK button.

To exit this diagnostic test, press Stop and then select **EXIT DIAGNOSTICS**.

Engine-test button

To verify that the product engine is functioning, print an engine test page. Use a small pointed object to depress the test-page switch located on the rear of the product. The test page should have a series of

horizontal lines. The test page can use only Tray 2 as the paper source, so make sure that paper is loaded in Tray 2.

Figure 3-3 Engine-test button

Paper-path test

This diagnostic test generates one or more test pages that you can use to isolate the cause of jams.

To isolate a problem, specify which input tray to use, specify whether to use the duplex path, and specify the number of copies to print. Multiple copies can be printed to help isolate intermittent problems. The following options become available after you start the diagnostic feature:

- **PRINT TEST PAGE**. Run the paper-path test from the default settings: Tray 2, no duplex, and one copy. To specify other settings, scroll down the menu and select the setting, and then scroll back up and select **PRINT TEST PAGE** to start the test.
- **SOURCE**. Select Tray 1, Tray 2, or the optional tray.
- **DUPLEX**. Enable or disable two-sided printing.
- **COPIES**. Set the numbers of copies to be printed; the choices are 1,10, 50, 100, or 500.

1. Press the Home button.
2. Press the down arrow ▼ to highlight **DIAGNOSTICS**, and then press the OK button.
3. Press the down arrow ▼ to highlight **PAPER PATH TEST**, and then press the OK button.
4. Select the paper-path test options for the test you want to run.

Manual sensor test (special-mode test)

Use this diagnostic test to manually test the product sensors and switches. Each sensor is represented by a letter and number on the control panel display.

1. Press the Home button ⌂.
2. Press the down arrow ▼ to highlight the **DIAGNOSTICS** menu, and then press the OK button.
3. Press the down arrow ▼ to highlight the **MANUAL SENSOR TEST** option, and then press the OK button.

To exit this diagnostic, press the Stop button ⊗, and then select **EXIT DIAGNOSTICS**.

Menus cannot be opened during this test, so the OK button serves the same function as the Stop button ⊗.

Table 3-3 Manual sensor diagnostic tests

Sensor or switch name	Sensor or switch number
A TOP (top of page) sensor	SR20
B loop 1 sensor	SR14
C loop 2 sensor	SR15
D fuser delivery sensor	SR5
E duplex re-pickup sensor	SR22
F output bin full sensor	SR6
G	Not used
H	Not used
I developer alienation	SR11
J fuser pressure-release sensor	SR7
K primary transfer-roller-disengagement sensor	SR9
L media sensor	SR21
M front door open	SW5
N right door open	SW6

When performing these tests, watch for the corresponding bit to toggle from 1 to 0 or 0 to 1. It can take a few seconds for bits to toggle.

Table 3-4 Default state of bits

Label	A	B	C	D	E	F	G	H	I	J	K	L	M	N
Bit	1	1	1	1	0	0	0	0	0	1	0		0	0

A TOP (top of page) sensor

1. Open the right door.
2. Insert a piece of paper to activate the TOP sensor.

Figure 3-4 Test the TOP sensor (1 of 2)

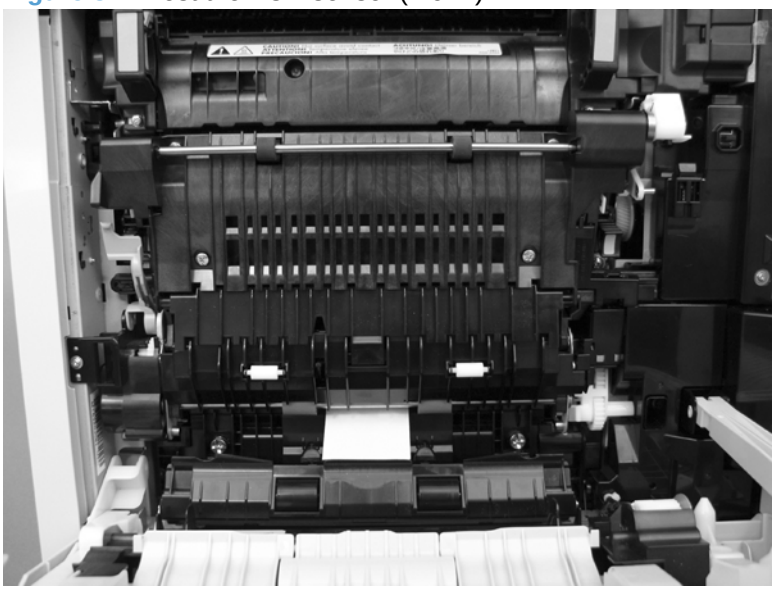

NOTE: Open the registration shutter to verify the paper activates the sensor.

Figure 3-5 Test the TOP sensor (2 of 2)

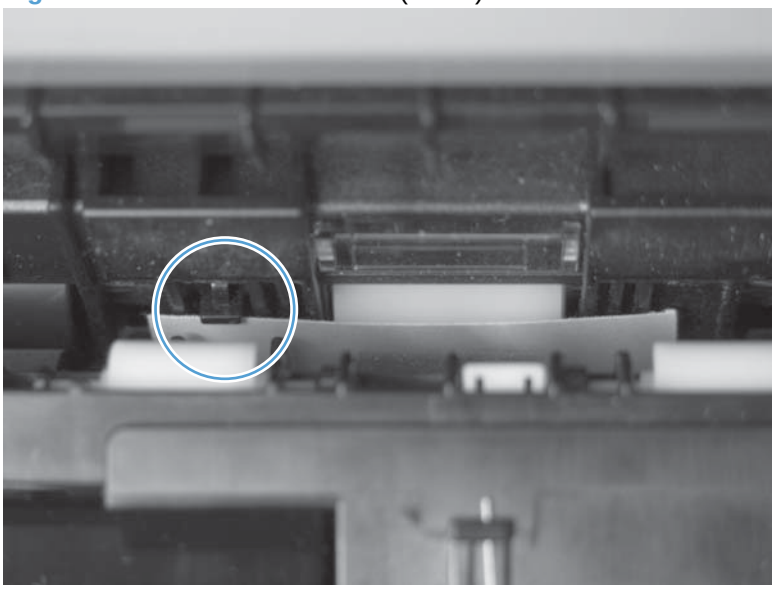

3. Check the control-panel display for sensor response.
4. If there is no response, replace the registration assembly. See Registration assembly on page 128.

B and C loop sensors

1. Open the right door.
2. Lower the secondary transfer assembly.
3. Slowly insert a piece of paper at the entrance of the fuser to activate the B and C loop sensors underneath the fuser.

   Figure 3-6 Test the loop sensors

   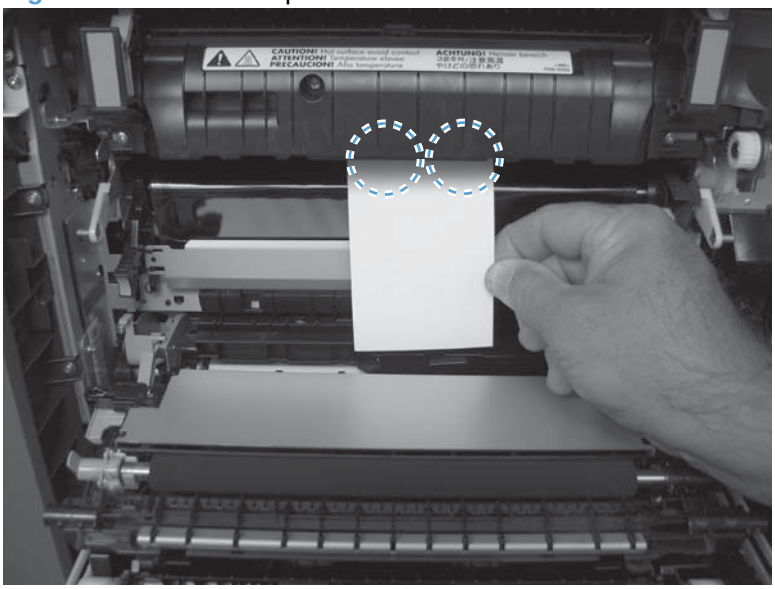

4. Check the control-panel display for a sensor response.
5. If there is no response, replace fuser. See Fuser on page 85.

D fuser delivery sensor

1. Open the right-door assembly.
2. Lower the secondary transfer assembly.
3. Remove the fuser, and then verify that the sensor flag on the fuser moves freely. If the sensor flag does not move freely, replace the fuser. See Fuser on page 85.

   Figure 3-7 Test the fuser delivery sensor (1 of 2)

   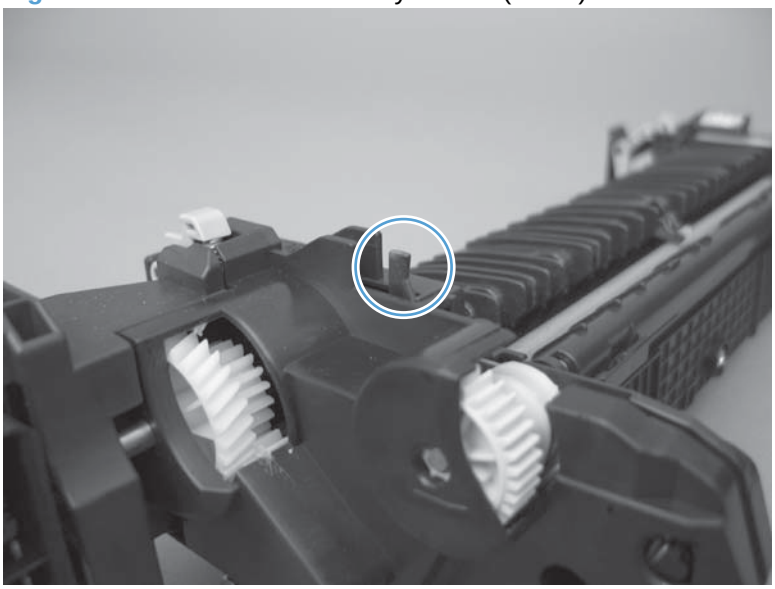

4. Insert a piece of paper to activate the fuser delivery sensor.

   Figure 3-8 Test the fuser delivery sensor (2 of 2)

   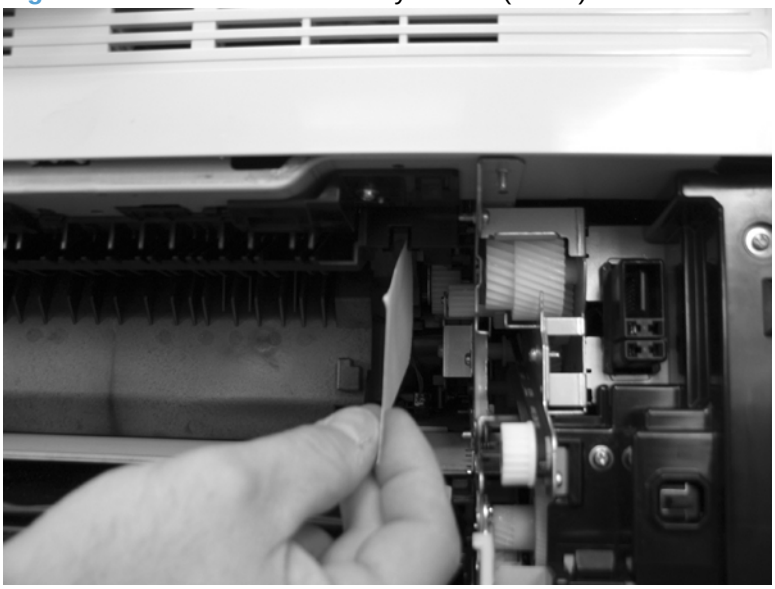

5. Check the control-panel display for a sensor response.
6. If there is no response, replace the fuser delivery sensor.

E duplex re-pickup sensor

1. Open the right door.
2. Lift the secondary-transfer assembly.
3. Press the flag to activate the sensor.

   Figure 3-9 Test the duplex re-pickup sensor

   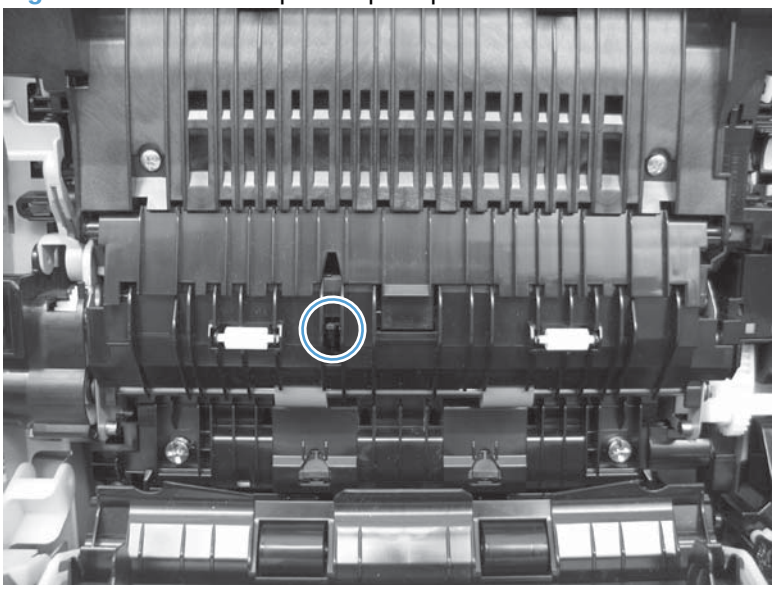

4. Check the control-panel display for sensor response.
5. If there is no response, replace the registration assembly. See Registration assembly on page 128.

F output bin full sensor

NOTE: The front-top, rear-top, and right-front covers have been removed for clarity.

1. Lift the flapper on the delivery assembly to move the output-bin full sensor flag.

   Figure 3-10 Test the output-bin-full sensor

   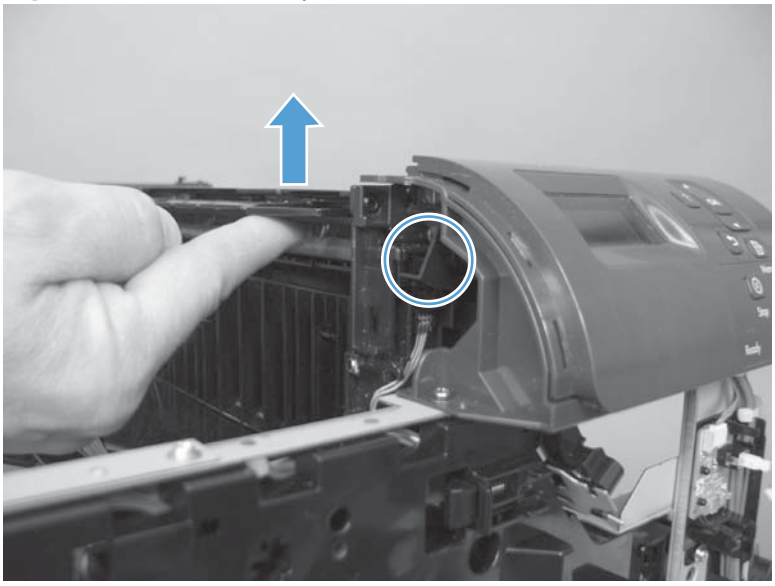

2. Check the control-panel display for sensor response.

3. If there is no response, remove the right-front cover (see Right-front cover on page 103) and verify that the flag is moving. If not, replace the delivery assembly. See Delivery assembly on page 145. If the sensor is malfunctioning, replace the sensor.

I developer alienation

This sensor is located inside the main-drive assembly and cannot be accessed for direct manual testing. To test this sensor, do the following.

1. Access the manual-sensor test menu and select sensor test I.
2. Locate connector J112 on the DC controller PCA.

△ **CAUTION:** ESD sensitive component.

3. Disconnect connector J112. The value shown on the control-panel display changes from “0” to “1” if the sensor is properly functioning.

J fuser pressure-release sensor

1. Open the right-door assembly.
2. Lower the secondary transfer assembly.
3. Remove the fuser.
4. Insert a piece of paper to activate the fuser pressure-release sensor.

   Figure 3-11 Test the fuser pressure-release sensor

   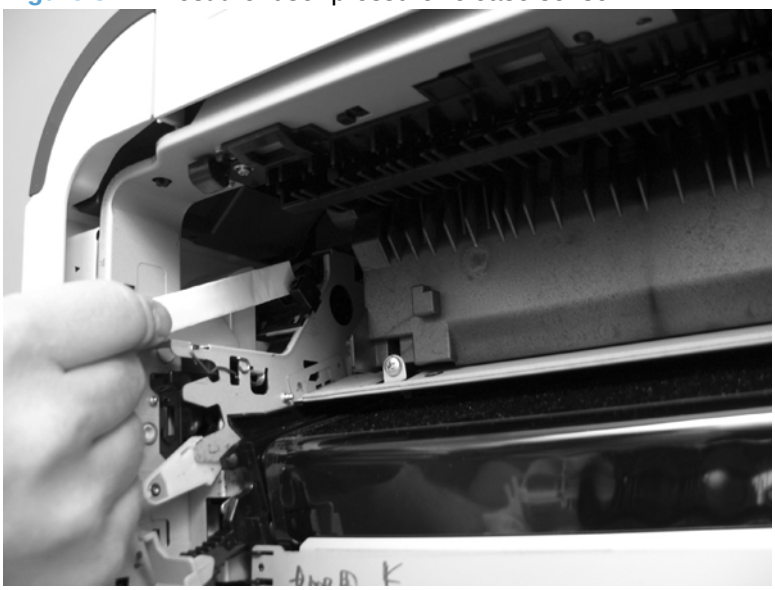

5. Check the control-panel display for sensor response.
6. If there is no response, replace fuser pressure-release sensor.

K primary transfer-roller-disengagement sensor

NOTE: The front-top, rear-top, and right-front covers have been removed for clarity.

1. Open the right-door assembly.
2. Lower the secondary transfer assembly, and then remove the fuser and ITB.
3. Rotate the gear (callout 1) to move the flag (callout 2). If the flag does not move, replace the ITB.

Figure 3-12 Test the primary transfer-roller-disengagement sensor (1 of 4)

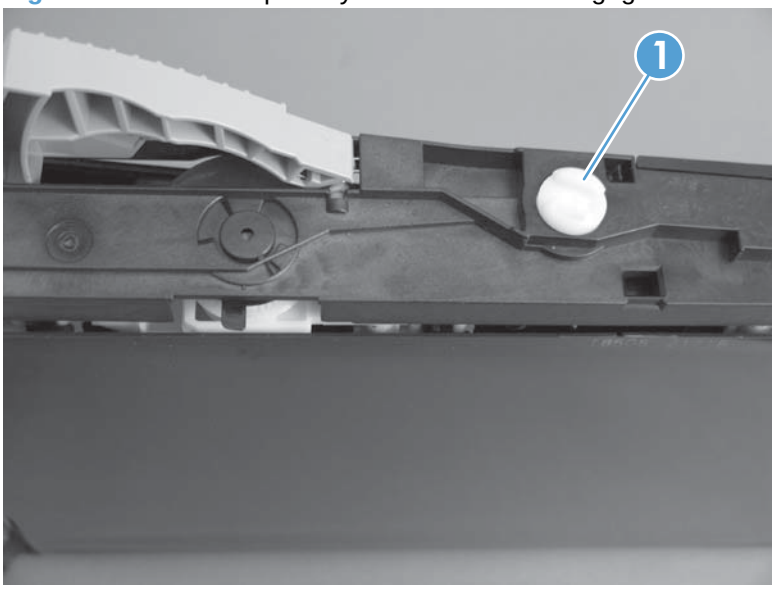

Figure 3-13 Test the primary transfer-roller-disengagement sensor (2 of 4)

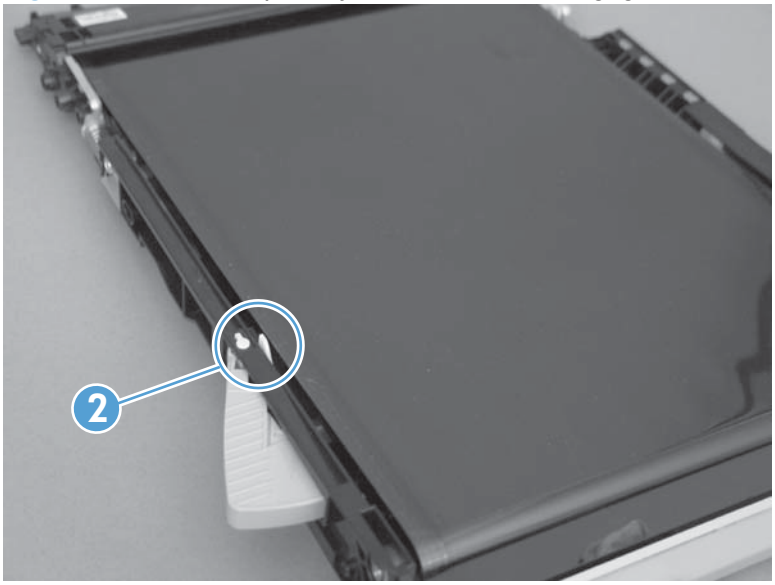

4. From inside the ITB cavity, press up on the primary-transfer-roller-disengagement flag to activate the sensor.

Figure 3-14 Test the primary transfer-roller-disengagement sensor (3 of 4)

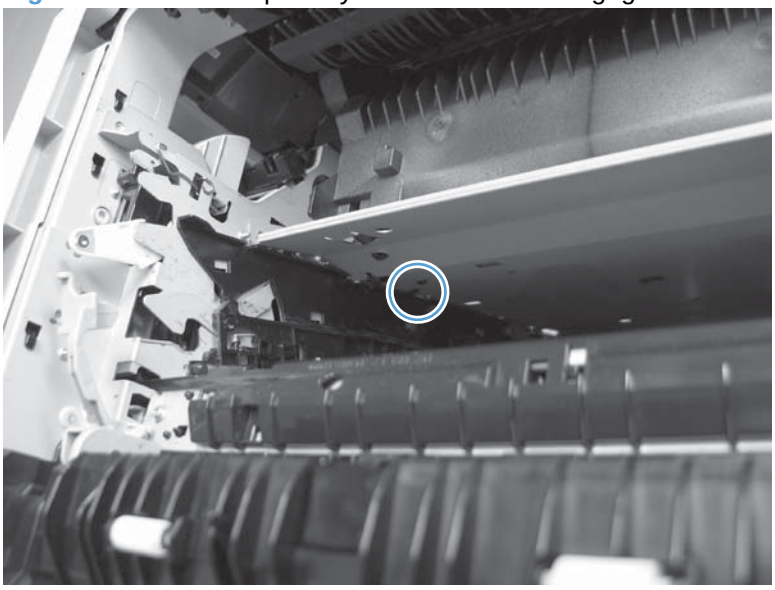

5. Check the control-panel display for sensor response.

6. If there is no response, remove the rear-top cover (see Rear-top cover on page 102) and verify that the flag is moving.

Figure 3-15 Test the primary transfer-roller-disengagement sensor (4 of 4)

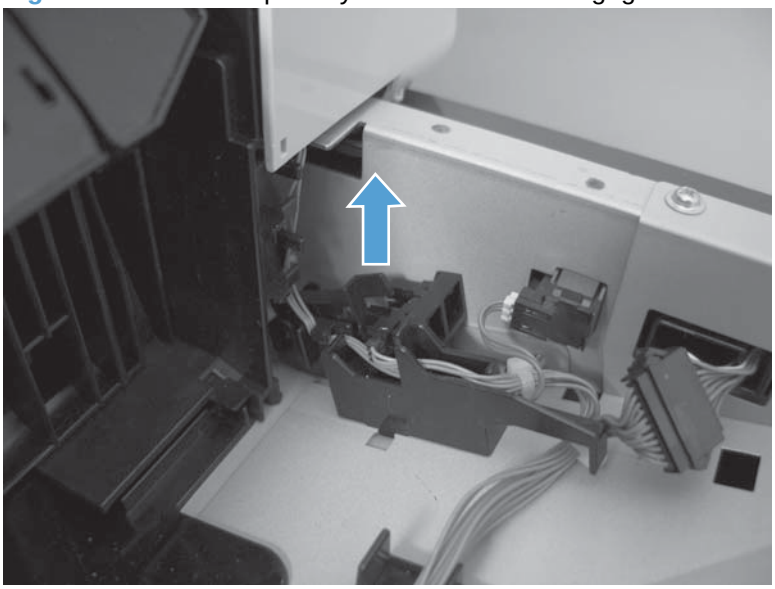

7. If the flag moves correctly, replace the sensor.

L media sensor

1. You cannot test this sensor with a manual sensor test. Test using the paper-path sensors test. See Paper-path sensors test on page 273.

   Figure 3-16 Media sensor

   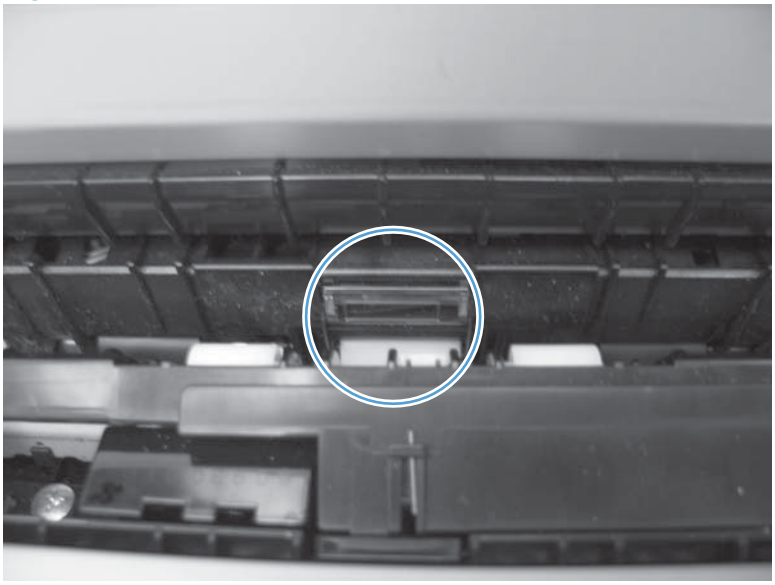

2. Access the paper-path sensors test.
3. Print a configuration page.
4. The media sensor (on the registration assembly) detects the type of media as it passes the sensor. The control-panel display changes based on the media type.

   NOTE: The following are examples only. The value that will display depends on the type of media being used to print the page.

   - **3**; displays if the media type is OHT
   - **4**; displays if the media type is Soft gloss
   - **1**; displays if the media type is HP multipurpose paper
   - **D**; displays if the media type is Premium Choice 32lb

M front-door switch

1. Open the front-door assembly to disengage the front-door switch.

   Figure 3-17 Test the front-door switch

   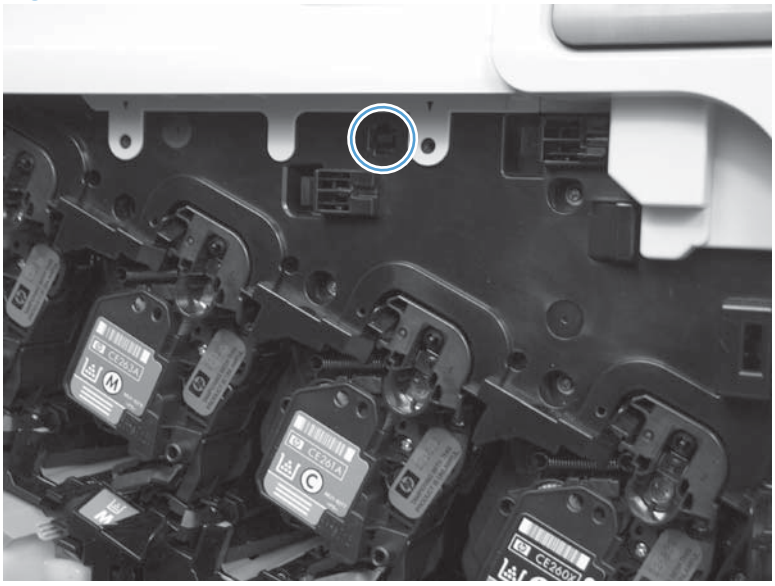

2. Close the front-door assembly, and then check the control panel on the product for sensor response.

   TIP: You can leave the front door open and use a slender blade screw driver or pencil to activate the switch.

3. If there is no response, replace the front-door switch.

N right-door switch

1. Open the right-door assembly to disengage the right-door switch.

   Figure 3-18 Test the right door switch

   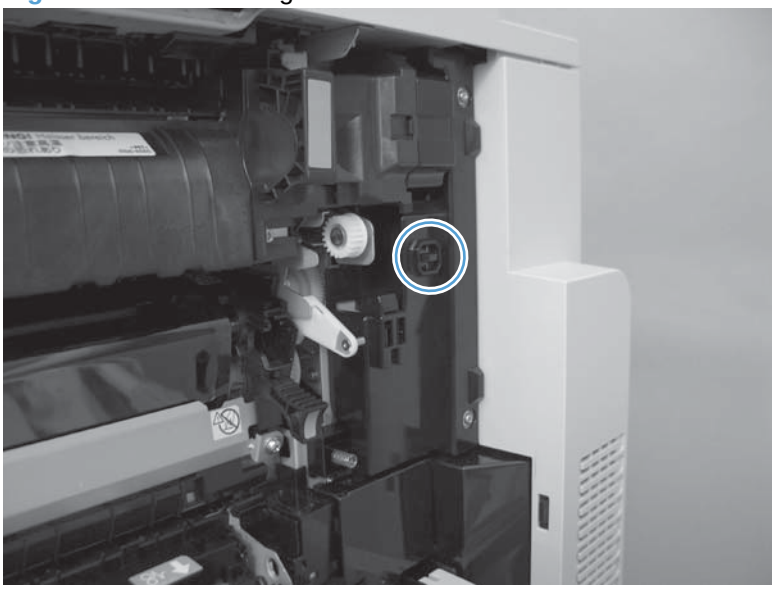

2. Close the right-door assembly, or use your finger to depress the switch flag, and check the control panel on the product for sensor response.

3. If there is no response, replace the right-door switch.

Manual sensor test 2 (special-mode test)

Use this test to test paper-path sensors and the paper-size switches manually. The following illustrations and table show the locations of these sensors.

1. Press the Home button ⌂.
2. Press the down arrow ▼ to highlight the **DIAGNOSTICS** menu, and then press the OK button.
3. Press the down arrow ▼ to highlight the **MANUAL SENSOR TEST 2** option, and then press the OK button.

Table 3-5 Manual sensor test 2 diagnostic tests

Sensor or switch name	Sensor or switch number
O Tray 1 paper present sensor	SR8
P Tray 2 paper present sensor	SR25
Q Tray 2 paper surface 1 and 2 sensors	SR23 and SR24
R Tray 2 paper size switches	SW4
S Tray 3 paper present sensor	SR3 (paper feeder)
T Tray 3 feed sensor	SR4 (paper feeder)
U Tray 3 paper surface 1 and 2 sensors	SR1 and SR2 (paper feeder)
V Tray 3 paper size switches	SW2 (paper feeder)
W Tray 4 paper present sensor	SR6 (paper feeder)
X Tray 4 feed sensor	SR7 (paper feeder)
Y Tray 4 paper surface 1 and 2 sensors	SR5 and SR8 (paper feeder)
Z Tray 4 paper size switches	SW3 (paper feeder)
a Tray 5 paper present sensor	SR11 (paper feeder)
b Tray 5 feed sensor	SR10 (paper feeder)
c Tray 5 paper surface 1 and 2 sensor	SR9 and SR12 (paper feeder)
d Tray 5 paper size switches	SW4 (paper feeder)
The following items cannot be tested using the manual sensor test.	
5 V laser and 24 V interlock switches	SW1 and SW2
Power switch	SW3
New ITB sensor	SR10
Tray 3, 4, and 5 right door switch	SW1 (paper feeder)

To perform these tests, do the following:

- Remove the appropriate tray.
- Watch for the corresponding bit to toggle from 1 to 0 or 0 to 1. It can take a few seconds for bits to toggle.

Table 3-6 Default state of bits

Label	O	P	Q	R	S	T	U	V	W	X	Y	Z	a	b	c	d
Bit	1	1	1	1	1	0	1	1	1	0	1	1	1	0	1	1

- Test each switch individually.

O Tray 1 paper present sensor

1. Open Tray 1.
2. Toggle the Tray 1 paper-present sensor flag.

   Figure 3-19 Test the Tray 1 media-present sensor

   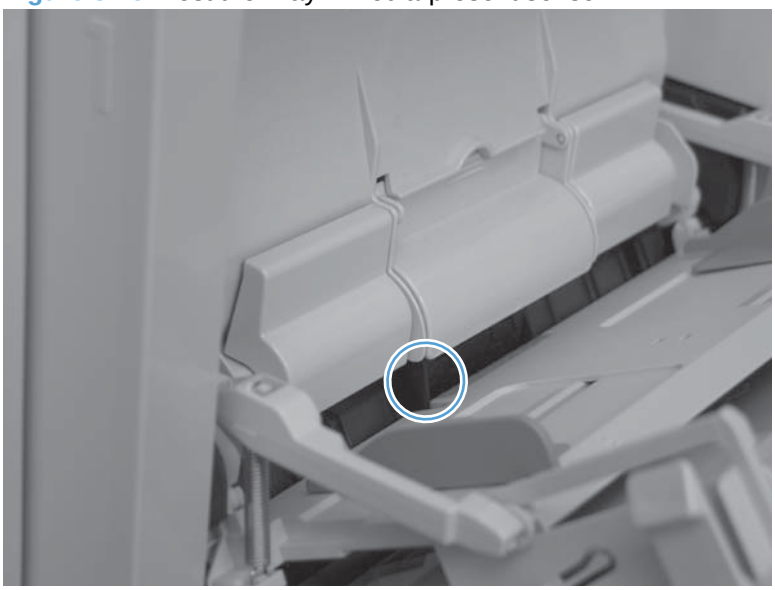

3. Check the control-panel display for sensor response.
4. If there is no response, replace Tray 1.

P Tray 2 paper present sensor

1. Remove Tray 2.
2. Toggle the tray 2 paper-present sensor flag.

   Figure 3-20 Test the tray 2 paper-present sensor

3. Check the control-panel display for sensor response.
4. If there is no response, replace the cassette-pickup assembly. See Tray-pickup assembly on page 180.

Q Tray 2 paper surface 1 and 2 sensors

1. Remove the tray.
2. In the tray cavity, press the tray-closed tab to release the flag, and then toggle the flag.

   Figure 3-21 Tray 2 paper surface 1 and 2

   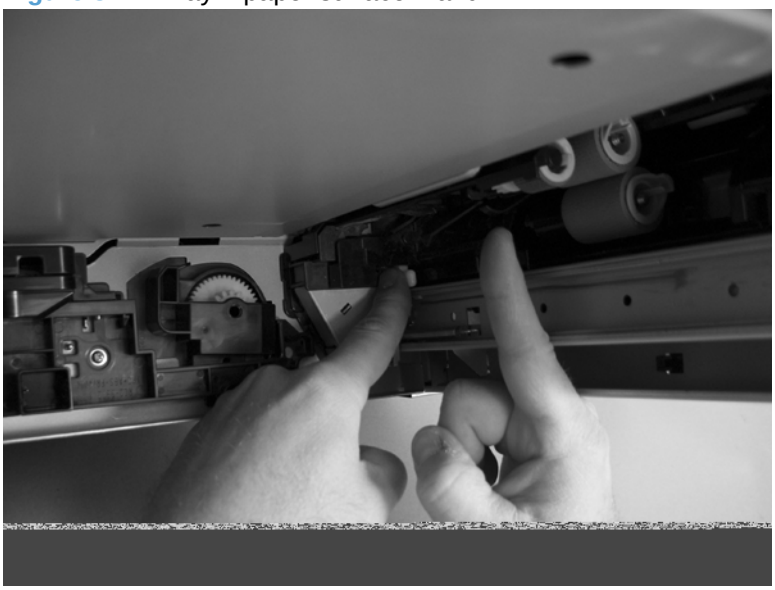

3. Check the control-panel display for sensor response.
4. If there is no response, replace the cassette-pickup assembly. See Tray-pickup assembly on page 180.

R Tray 2 paper size switches

NOTE: These switches also detect cassette presence. If these switches fail, the message **TRAY <X> OPEN** could appear on the control-panel display.

1. Remove the tray. From inside the tray cavity, push any of the three buttons.

   Figure 3-22 Test the Tray 2 paper size switches

   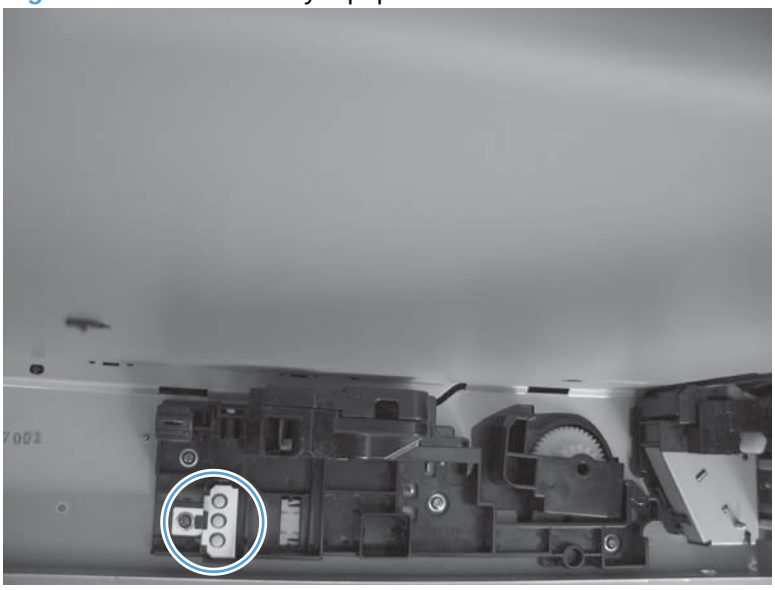

2. Check the control-panel display for sensor response.
3. If there is no response, replace the lifter assembly. See Lifter base assembly on page 175.

S Tray 3 paper present sensor

See P Tray 2 paper present sensor on page 262.

T Tray 3 feed sensor

1. Remove the tray.
2. Insert a piece of paper between the rollers to activate the feed sensor.

TIP: Use stiff paper when performing this test (for example a business card or index card).

Figure 3-23 Test the Tray 3 feed sensor

3. Check the control-panel display for sensor response.
4. If no response, replace the cassette-pickup assembly. See Tray-pickup assembly on page 180.

U Tray 3 paper surface 1 and 2 sensors

See Q Tray 2 paper surface 1 and 2 sensors on page 263.

V Tray 3 paper size switches

See R Tray 2 paper size switches on page 264.

W Tray 4 paper present sensor

See P Tray 2 paper present sensor on page 262.

X Tray 4 feed sensor

See T Tray 3 feed sensor on page 265.

Y Tray 4 paper surface 1 and 2 sensors

See Q Tray 2 paper surface 1 and 2 sensors on page 263.

Z Tray 4 paper size switches

See R Tray 2 paper size switches on page 264.

a Tray 5 paper present sensor

See P Tray 2 paper present sensor on page 262.

b Tray 5 feed sensor

See T Tray 3 feed sensor on page 265.

c Tray 5 paper surface 1 and 2 sensors

See Q Tray 2 paper surface 1 and 2 sensors on page 263.

d Tray 5 paper size switches

See R Tray 2 paper size switches on page 264.

5V laser and 24V interlock and logic switches (and power switch)

Location and testing

1. Press the power switch to turn the product off then on to test the switch function.
2. Remove the right-front cover. See Right-front cover on page 103.
3. Locate the link arms (callout 1) on the front and right doors (and access ports in the covers; callout 2) that actuate the front- and right-door interlock switch (behind the right-front cover).

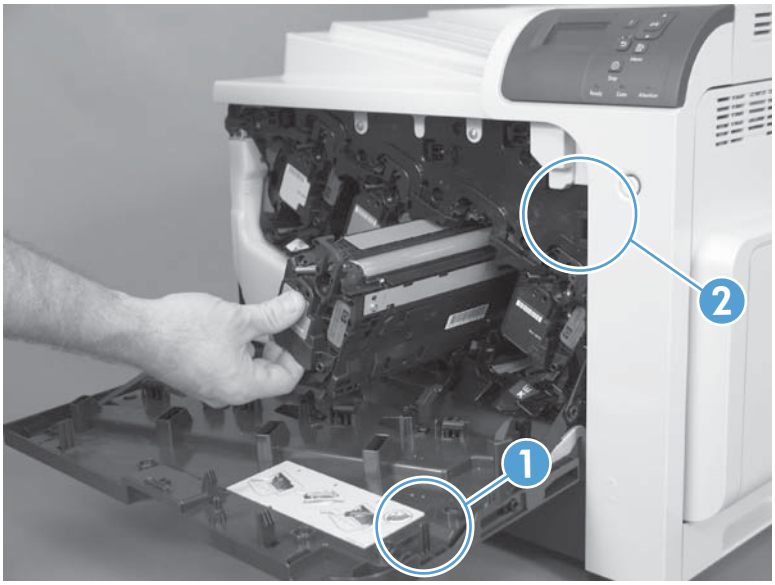

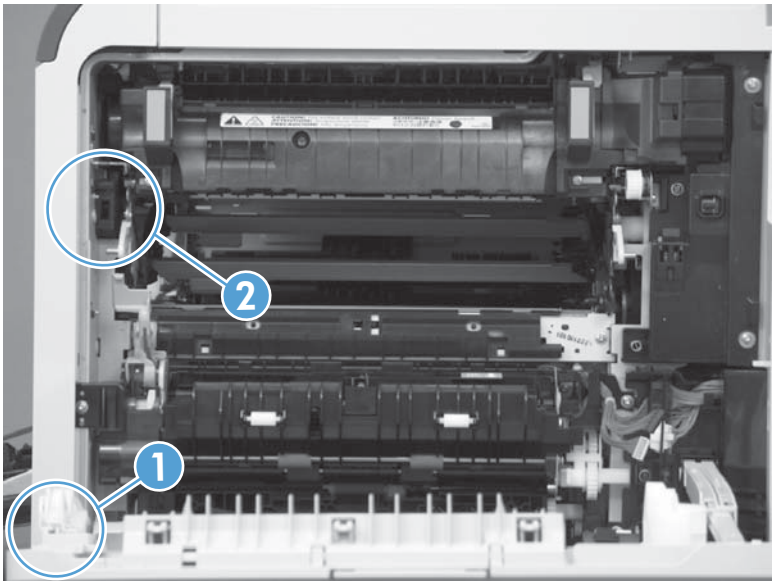

4. Open and close the doors to make sure that the interlock switches are correctly functioning. The following figures show the interlock switch position with the front and right doors open and closed.

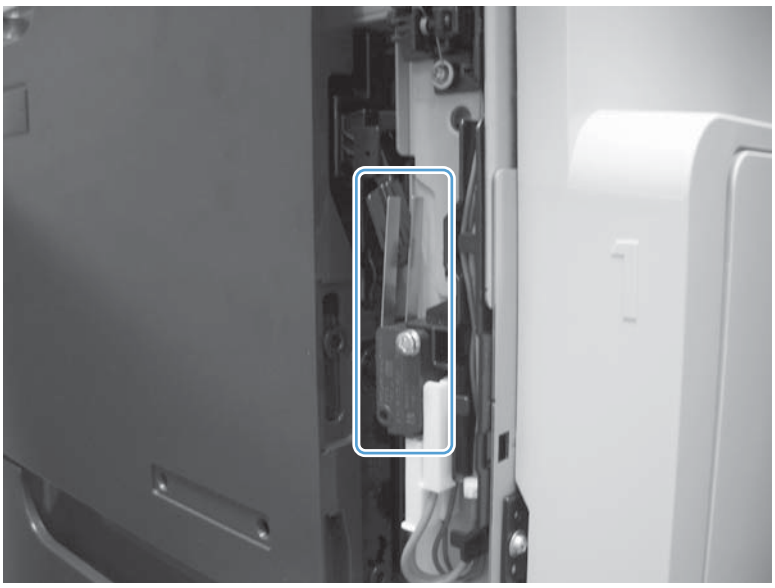

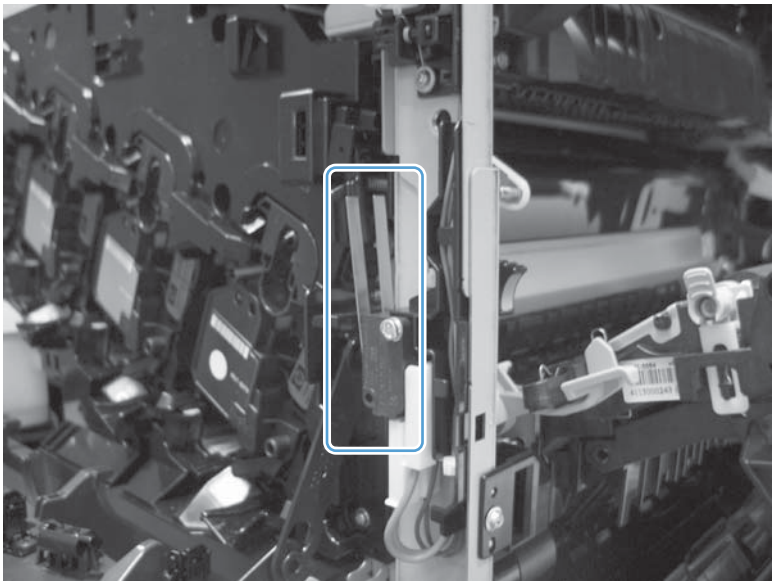

Defeating

- Front-door safety switch
  - Fold a stiff piece of paper, for example a business card or index card, into a 10 mm (.375 in) strip, and then wedge the strip into the opening at the front of the product.

- Front-door logic switch
  - Fold a stiff piece of paper, for example a business card or index card, into a 10 mm (.375 in) strip with a bend at the end, and insert the strip into the opening at the front of the product.

- Right-door safety switch
  - Fold a stiff piece of paper, for example a business card or index card, into a 10 mm (.375 in) strip, and then insert the strip into the opening at the right of the product.

- Right-door logic switch
  - Use masking tape to keep the switch flag depressed.

    TIP: You might have to use two pieces of tape to overcome the tension return spring on the flag.

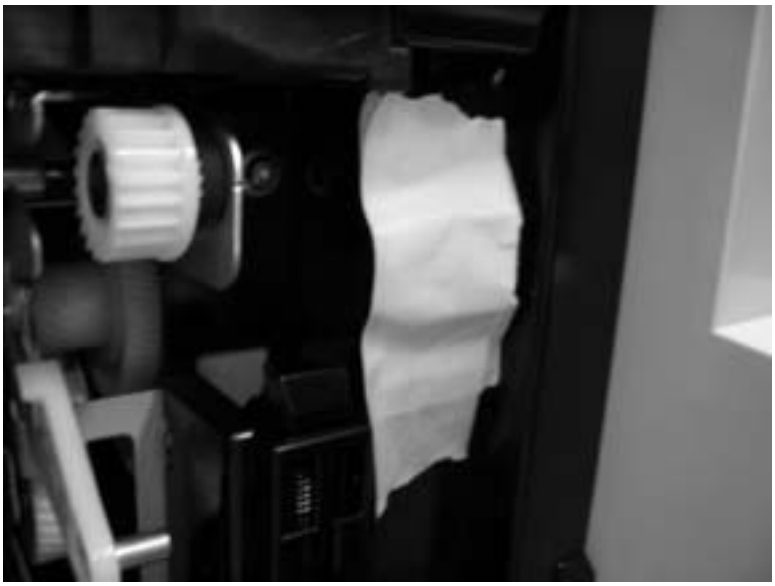

New ITB sensor

NOTE: This sensor cannot be tested, but you can inspect the sensor, actuator, and the flag on the ITB for damage.

1. Remove the existing ITB.
2. Inspect the new ITB sensor. Press the actuator on the sensor toward the cyan print cartridge to verify that the actuator moves.

Figure 3-24 Test the new ITB sensor

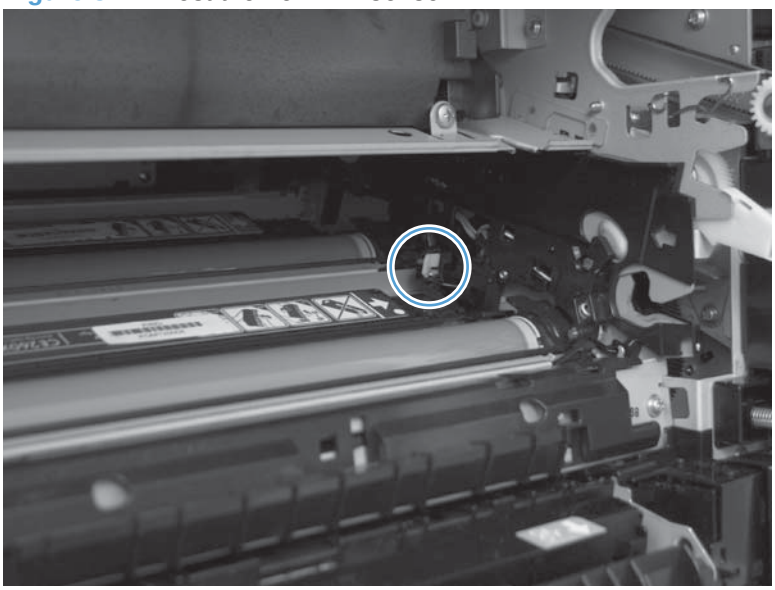

3. On the new ITB, locate and inspect the new ITB flag (callout 1).

TIP: The new ITB flag is only present prior to installation. To see the flag on a previously installed ITB, insert the end of a paperclip in the hole just below the handle (callout 2) and then rotate the ITB alienation gear (callout 3).

Figure 3-25 Test the new ITB sensor

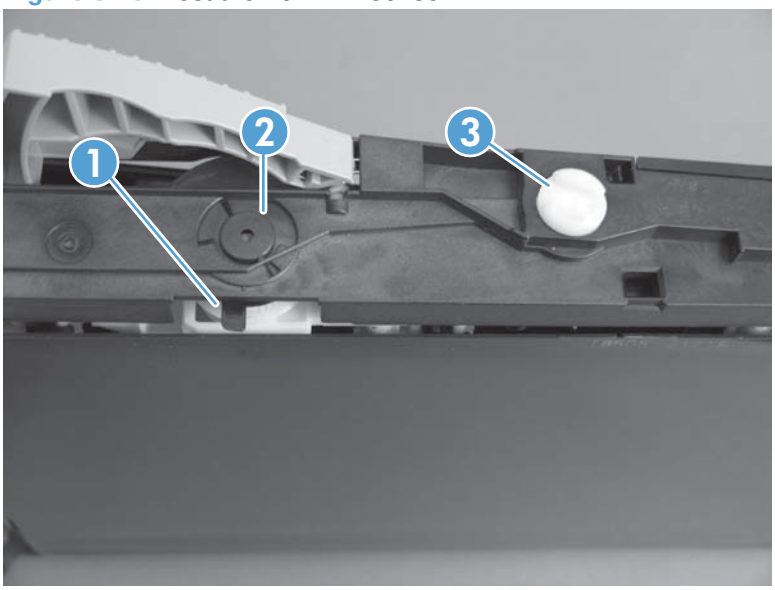

Tray 3, 4, and 5 right door switch

NOTE: There is no manual sensor test for this sensor.

1. Open the paper feeder right door. Check the control-panel display for the **CLOSE LOWER RIGHT DOOR** message. If the message does not display, open the door and inspect the flag for damage (callout 1).
2. Insert a piece of paper to activate the sensor. If there is no response, replace the switch.

   NOTE: Make sure that the door flag (callout 1) is not damaged or missing.

Figure 3-26 Test the right door switch

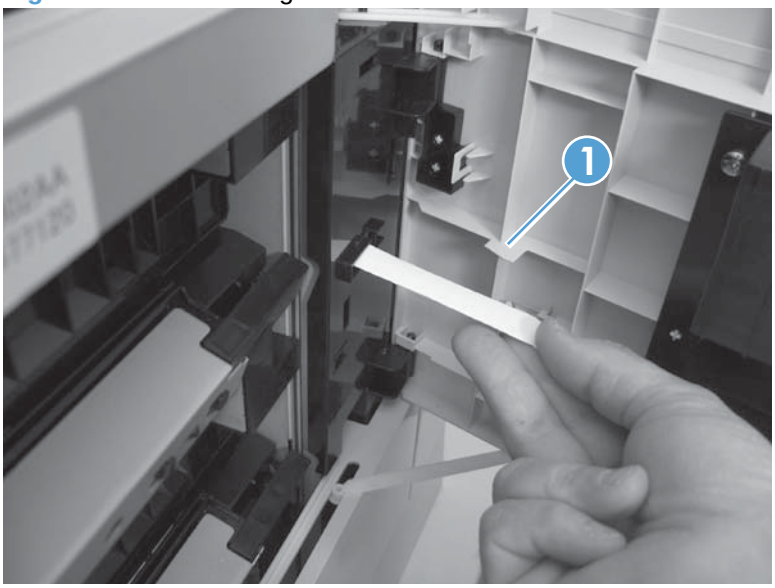

Paper-path sensors test

This test displays the status of each paper-path sensor and allows viewing of sensor status while printing internal pages.

1. Press the Home button.
2. Press the down arrow ▼ to highlight the **DIAGNOSTICS**, menu and then press the OK button.
3. Press the down arrow ▼ to highlight the **PAPER PATH SENSORS** option, and then press the OK button.
4. Select the paper-path test options for the test you want to run.

NOTE: Print an internal page to view sensor activity.

Table 3-7 Paper-path sensors diagnostic tests

Sensor name	Sensor number
A TOP (top of page) sensor	SR20
B loop 1 sensor	SR14
C loop 2 sensor	SR15
D fuser delivery sensor	SR5
E duplex re-pick up sensor	SR22
F output bin full sensor	SR6
G	Not used
H	Not used
I developer alienation	SR11
J fuser pressure-release sensor	SR7
K primary transfer-roller-disengagement sensor	SR9
L media sensor	SR21
NOTE: The value for this test varies depending on the type of media used for the test. For example, a “1” displays for HP Multi-purpose paper; a “D” displays for HP Premium Choice 32lb paper.	

Print/stop test

Use this diagnostic test to isolate the cause of problems such as image-formation defects and jams within the engine. During this test you can stop the paper anywhere along the product paper path. The test can be programmed to stop printing internal pages or an external print job when the paper reaches a certain position. The test can also be programmed to stop from 0 to 60,000 ms. If the timer is set to a value that is greater than the job-print time, you can recover the product in one of two ways.

- After the print job is completed press Stop to return to the **DIAGNOSTICS** menu before the timer times out.
- After the timer times out, press Stop. Activate the door switch to restart the engine and return it to a normal state.

When the timer trips, the control panel display shows the message **PRINTING STOPPED To continue press OK**. Pressing Home will print the previously selected job. If you do not want the previous job to print, press Stop first, and then press Menu.

NOTE: Do not try to perform a print/stop test while the product is calibrating, because you be required to power-cycle the product. If a jam message displays on the control panel during testing, activate the door switch.

Component tests

Component test (special-mode test)

This test activates individual parts independently to isolate problems.

Each component test can be performed once or repeatedly. If you select **CONTINUOUS** from the drop-down menu as the repeat option, the test cycles the component on and off. This process continues for two minutes, and then the test terminates.

NOTE: The front or side door interlocks must be defeated to run the component tests. Some tests may require that the ITB and print cartridges be removed. The control panel display prompts you to remove some or all cartridges during certain tests.

1. Press the Home button.
2. Press the down arrow ▼ to highlight **DIAGNOSTICS**, and then press the OK button.
3. Press the down arrow ▼ to highlight **COMPONENT TEST**, and then press the OK button.
4. Select the component test options for the test you want to run.

Table 3-8 Component test details

Component test	Motor or solenoid number	Comments
TRANSFER MOTORS	M1 M3 M4 M5 M6	Activates four drum motors and the ITB motor (M1).
BELT ONLY	M1	Activates the ITB motor.
CARTRIDGE MOTORS	• M3: yellow • M4: magenta • M5: cyan • M6: black	Activates each drum motor sequentially (K, C, M, Y).
BLACK LASER SCANNER	M8	Activates the black/cyan scanner motor for 10 seconds.
CYAN LASER SCANNER	M8	Activates the black/cyan scanner motor for 10 seconds.
MAGENTA LASER SCANNER	M9	Activates the yellow/magenta scanner motor for 10 seconds.

Table 3-8 Component test details (continued)

Component test	Motor or solenoid number	Comments
YELLOW LASER SCANNER	M9	Activates the yellow/magenta scanner motor for 10 seconds.
FUSER MOTOR	M2	Activate the fuser motor at a specified speed for 10 seconds.
FUSER PRESSURE RELEASE MOTOR	M2 reverse	Reverses the fuser motor and pressurizes or depressurizes the fuser.
ALIENATION MOTOR	M10	Activates CMYK developer alienation in the following sequence: All colors engaged, all colors alienated, K-only engaged, and K alienated.
ITB CONTACT ALIENATION MOTOR	M2 SL1	Activates the fuser motor and primary transfer solenoid to cycle through the ITB alienation stages.
TCU MOTOR	M12	Activates the motor at a specified speed for 10 seconds.
TRAY 1 PICKUP SOLENOID	SL3	Activates the solenoid for 10 seconds.
TRAY 2 PICKUP MOTOR	M13	Activates the pickup motor in reverse for 10 seconds.
TRAY 2 PICKUP SOLENOID	SL4	Activates the solenoid for 10 seconds.
TRAY 3 PICKUP MOTOR	M2	Activates the motor in the paper-feeder assembly and drives the separation roller for each tray in reverse.
TRAY 3 PICKUP SOLENOID	SL1	Activates the solenoid for 10 seconds.
TRAY 4 PICKUP MOTOR	M2	Activates the motor in the paper-feeder assembly and drives the separation roller for each tray in reverse.
TRAY 4 PICKUP SOLENOID	SL2	Activates the solenoid for 10 seconds.
TRAY 5 PICKUP MOTOR	M2	Activates the motor in the paper-feeder assembly and drives the separation roller for each tray in reverse.
TRAY 5 PICKUP SOLENOID	SL3	Activates the solenoid for 10 seconds.
DUPLEX PICKUP MOTOR	M11: Duplex reverse motor	Activates the motor at a specified speed for 10 seconds.

Table 3-8 Component test details (continued)

Component test	Motor or solenoid number	Comments
DUPLEX REFEED CLUTCH SOLENOID	SL2: duplex reverse solenoid	Activates the duplex flapper solenoid for 10 seconds causing the switch-back diverter to move.
REPEAT		Allows you to specify the number of times the product sequences. The choices are **ONCE** (default) and **CONTINUOUS**. To terminate the test, press **STOP**

Diagrams

Block diagrams

Figure 3-27 Product cross section

Item	Description	Item	Description
1	ITB	12	Media sensor
2	Primary transfer roller	13	Registration shutter
3	Duplex flapper (duplex model)	14	MP tray pickup roller
4	Duplex reverse roller (duplex model)	15	MP tray separation pad
5	Pressure roller	16	Registration roller
6	Fuser	17	Cassette separation roller
7	Fuser sleeve	18	Cassette feed roller
8	Duplex feed roller (duplex model)	19	Cassette pickup roller
9	Secondary transfer roller	20	Photosensitive drum
10	ITB drive roller	21	Cassette
11	RD sensor	22	Laser/scanner assembly

Figure 3-28 Optional paper feeder (1 x 500-sheet)

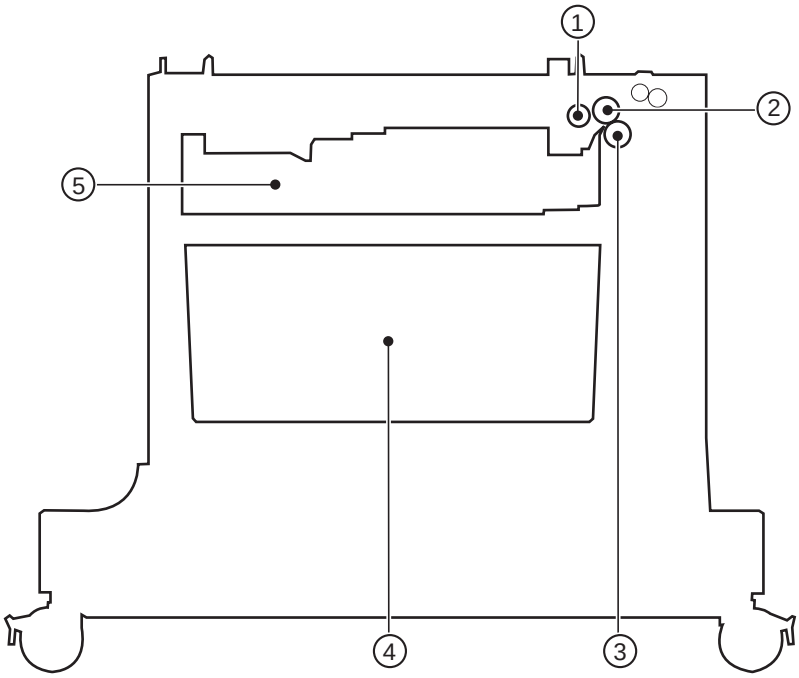

Item	Description
1	Pickup roller
2	Feed roller
3	Separation roller
4	Storage space
5	Cassette

Figure 3-29 Optional paper feeder (3 x 500-sheet)

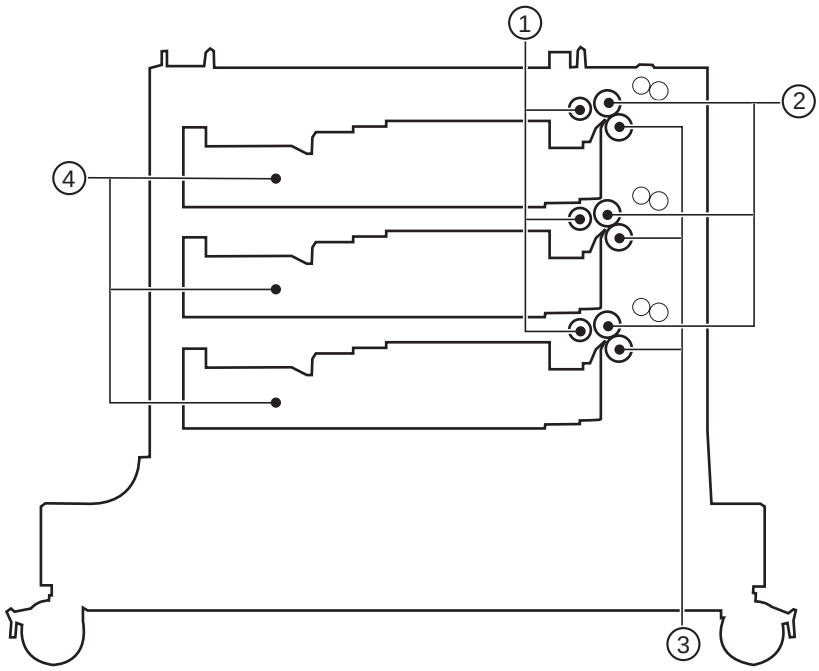

Item	Description
1	Pickup roller
2	Feed roller
3	Separation roller
4	Cassette

Plug/jack locations

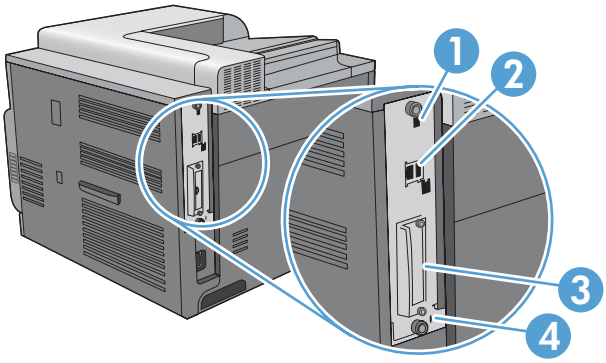

1	Hi-speed USB 2.0 printing port
2	Local area network (LAN) ethernet (RJ-45) network port
3	EIO interface expansion slot
4	Slot for a cable-type security lock

Figure 3-30 Formatter PCA

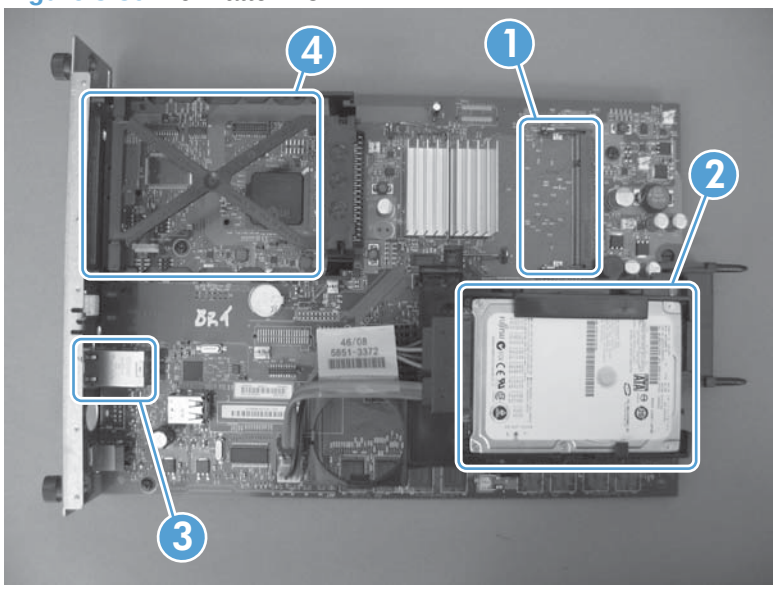

Table 3-9 Formatter PCA

Item	Description
1	DIMM slot
2	Internal hard drive
3	USB ports
4	EIO slot

Location of connectors

DC controller connector locations

NOTE: The DC controller has 36 connectors: Five are for FFCs, 27 are for wire harnesses, and four are not used.

Figure 3-31 DC controller connector locations

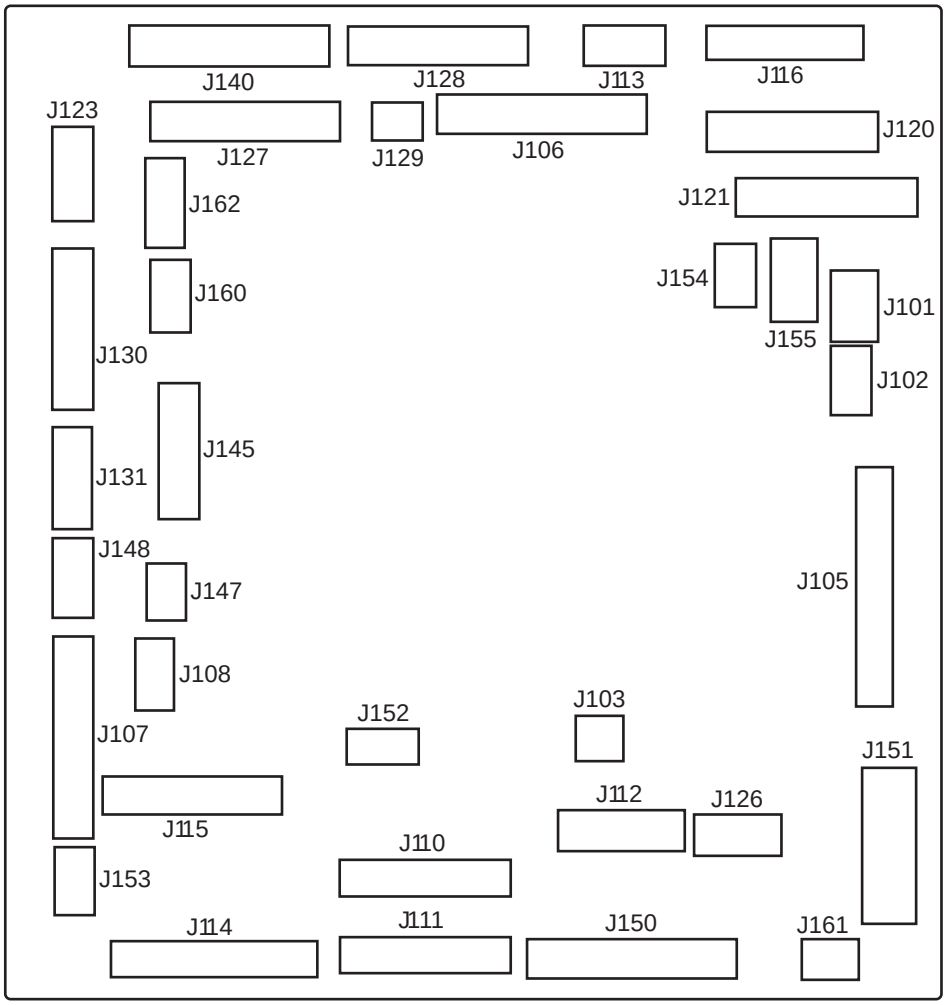

Table 3-10 **DC controller connectors**

J101: not used	**J115**: SL4, SL23, SL24, SL25, and HVPS lower	**J145**: TOP (top of page) sensor (SR20) TOP (top of page) sensor (SR20), duplex re-pickup sensor (SR22), and duplex re-pickup clutch (CL1) (HP Color LaserJet CP4525dn, HP Color LaserJet CP4025dn, and HP Color LaserJet CP4525xh only)
J102: not used	**J116**: HVPS upper (FFC)	**J147**: right-door switch (SW6)
J103: laser scanner temperature sensor (TH4)	**J120**: yellow drum motor (M3) and magenta drum motor (M4)	**J148**: MP-tray-media-presence sensor (SR8) and MP-tray pickup solenoid (SL3)
J105: interconnect board (ICB)	**J121**: cyan drum motor (M5) and black drum position (M6)	**J150**: LVPS

Table 3-10 DC controller connectors (continued)

J106: not used	**J123**: fuser motor (M2)	**J151**: LVPS
J107: Tray 3, 4, and 5 lifter motors (M7), and cassette paper size switch (SW4)	**J126**: memory tag connector	**J152**: 5V interlock switch (SW1)
J108: environmental sensor	**J127**: pre-exposure LEDs (rear), fuser delivery sensor (SR5), New ITB sensor (SR10)	**J153**: power supply fan (FM1)
J110: YM laser (FFC)	**J128**: Delivery tray media full sensor (SR6), Fuser pressure release sensor (SR7), and pre-exposure LEDs (front)	**J154**: not used
J111: CK laser (FFC)	**J129**: front-door switch (SW5)	**J155**: Residual toner-feed motor (M12) and delivery fan (FM3)
J112: cyan/black scanner motor (M8), yellow/magenta scanner motor (M9), and developing disengagement sensor (SR11)	**J130**: registration density (RD) sensors (front and rear)	**J160**: fuser
J113: 24 v to high-voltage power supply (HVPS) upper (FFC)	**J131**: media sensors	**J161**: LVPS
J114: HVPS lower (FFC)	**J140**: ITB motor (M1), yellow drum home-position sensor (SR1), magenta drum home-position sensor (SR2), cyan drum home-position sensor (SR3), black drum home-position sensor (SR4), and primary transfer roller disengagement solenoid (SL1)	**J162**: fuser

Controller PCA (1 x 500-sheet and 3 x 500-sheet optional paper feeders)

Figure 3-32 Controller PCA connectors

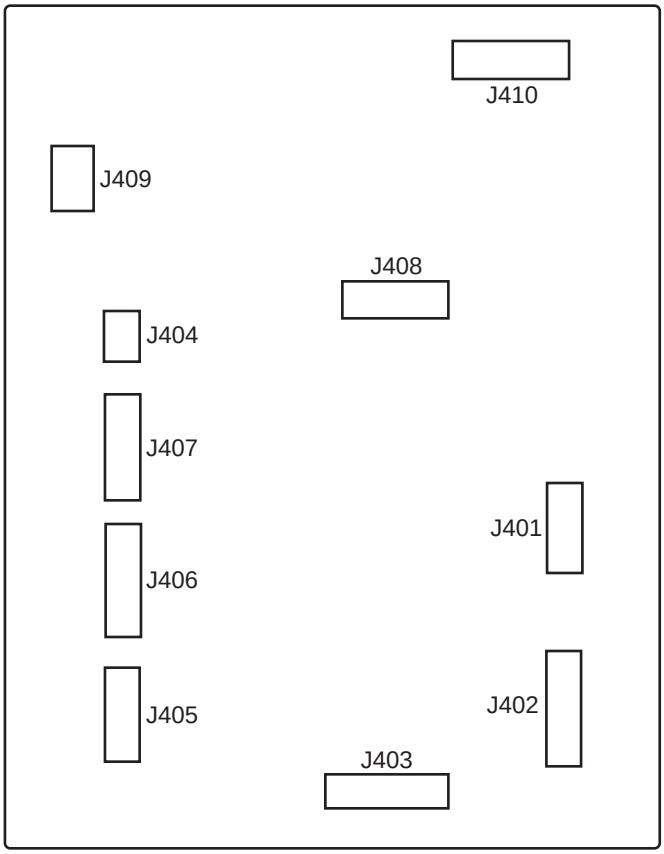

Table 3-11 Controller PCA connectors

J401: not used
J402: lifter motor 3 signal
J403: cassette media presence 3
J404: right door open sensor
J405: lifter motor 2 signal
J406: cassette media presence 2
J407: lifter motor 1 signal
J408: cassette media presence 1
J409: pickup motor
J410: communication (command)

Locations of major components

Figure 3-33 External component locations

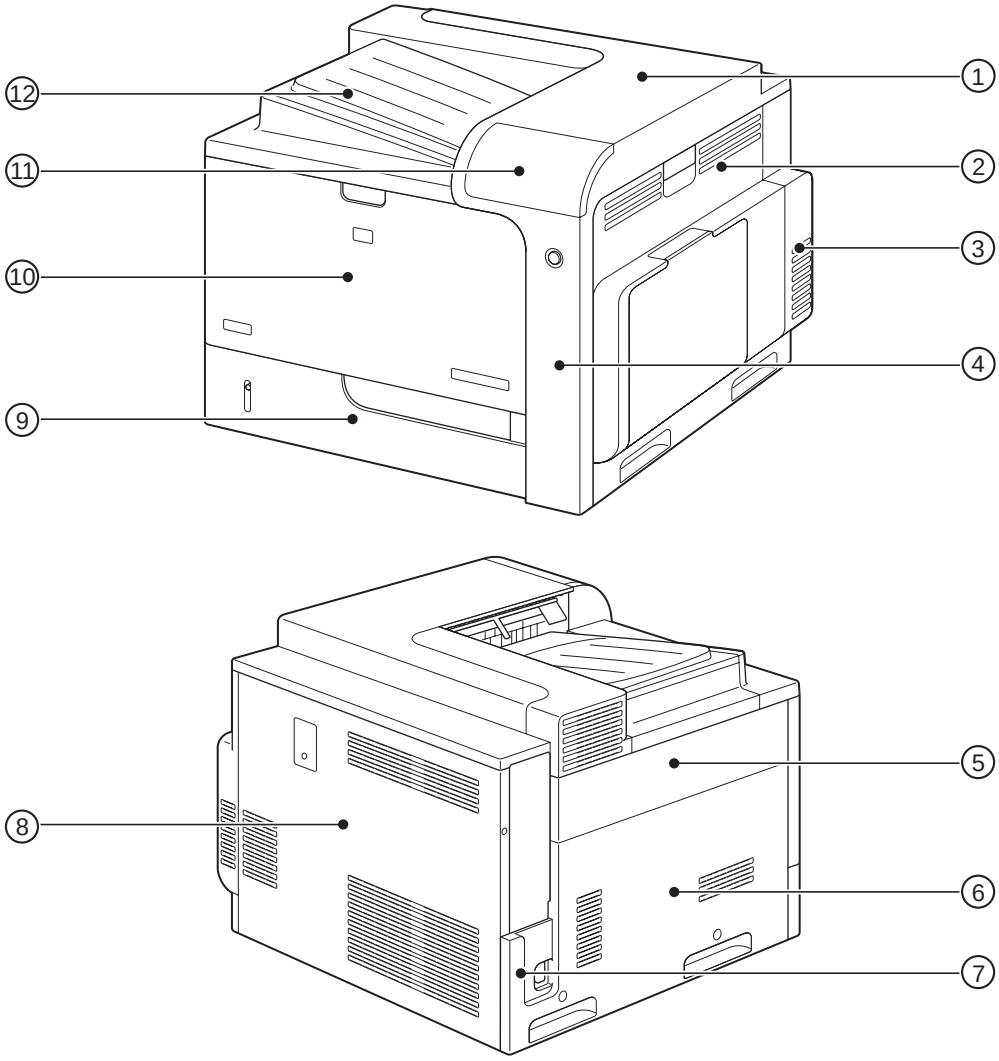

Item	Description	Item	Description
1	Rear-top cover	7	Power-supply cover
2	Right-door assembly	8	Rear cover
3	Right-rear cover	9	Tray 2
4	Right-front cover	10	Front-door assembly
5	Upper-left cover	11	Control-panel assembly
6	Left cover	12	Front-top cover

Figure 3-34 Major component locations (1 of 3)

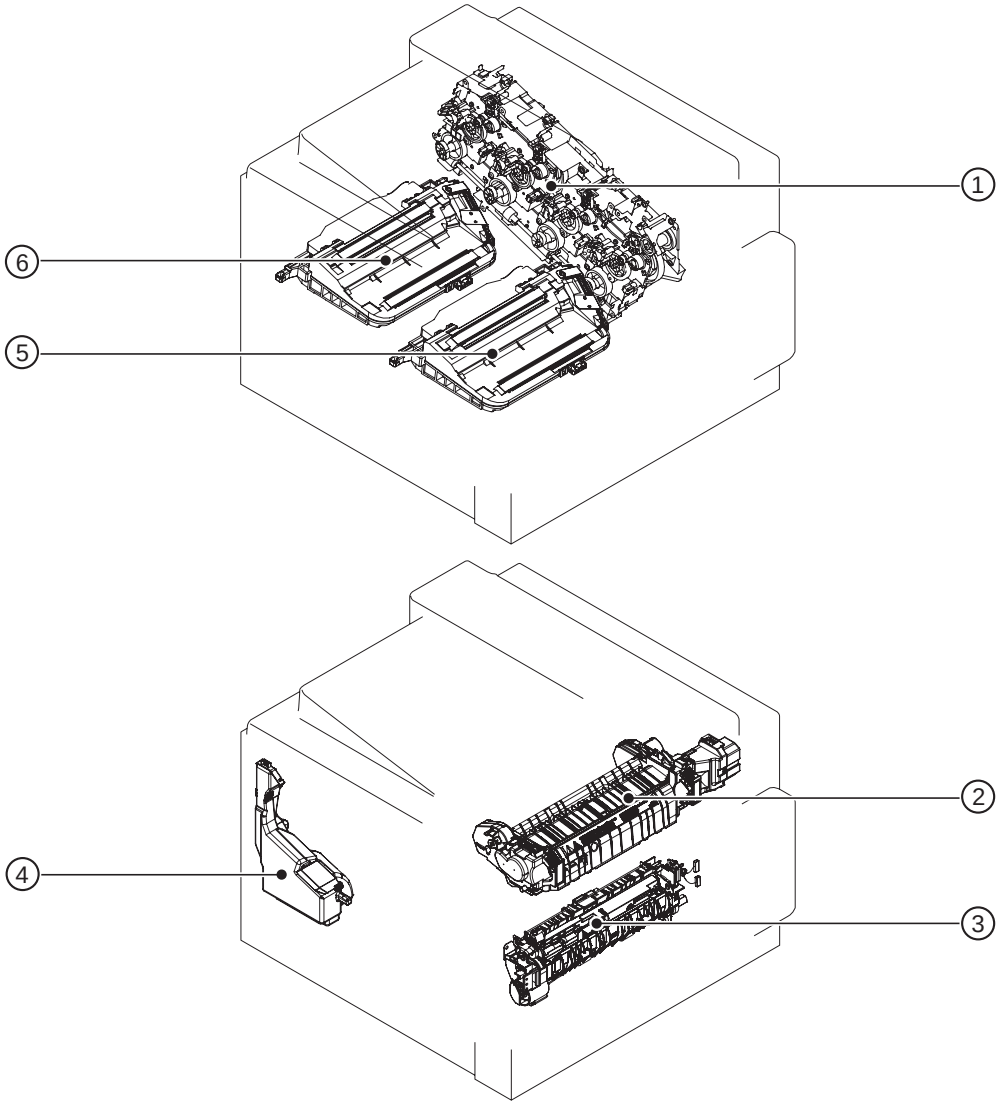

Item	Description
1	Main drive assembly
2	Fuser
3	Registration assembly
4	Toner collection unit
5	Laser/scanner assembly (C/Bk)
6	Laser/scanner assembly (Y/M)

Figure 3-35 Major component locations (2 of 3)

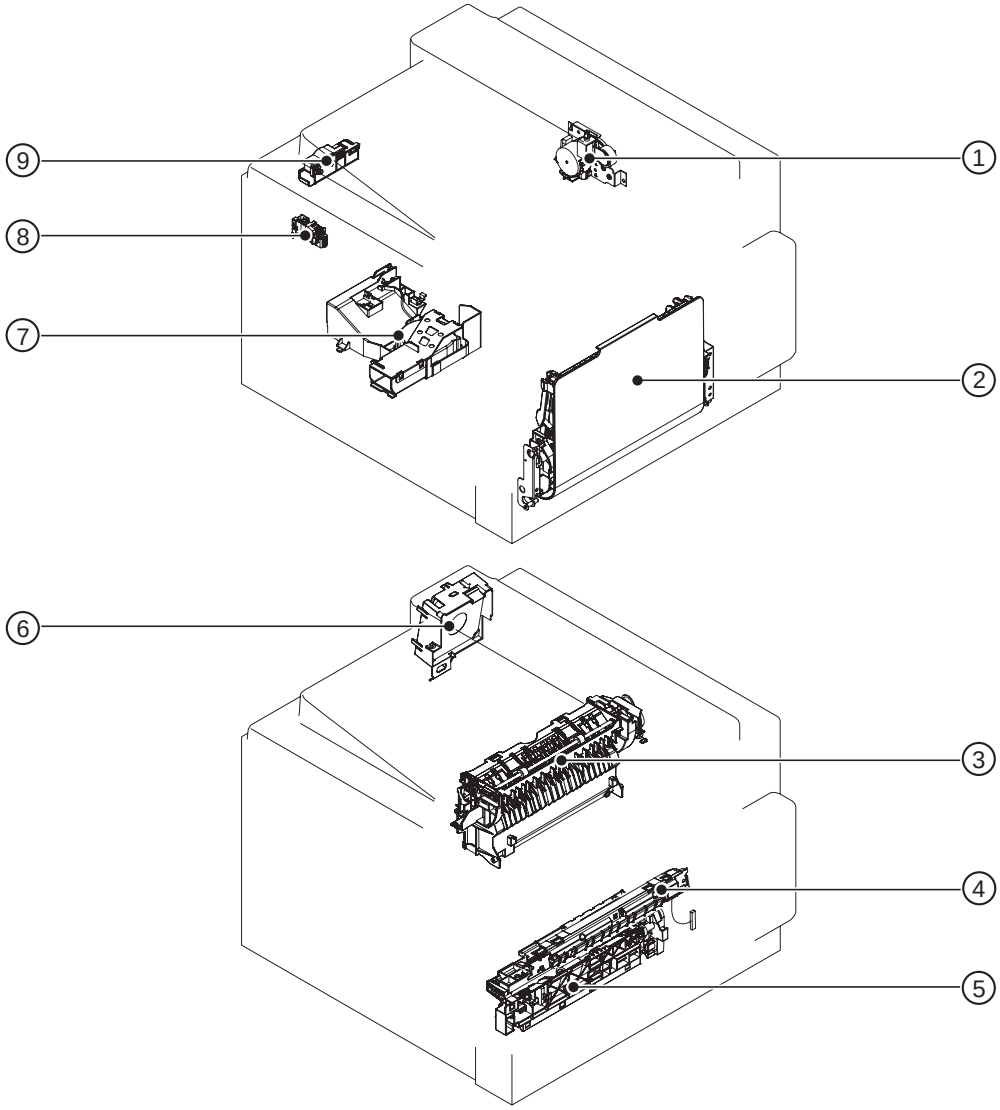

Item	Description	Item	Description
1	Duplex-drive assembly	6	Delivery fan
2	MP tray assembly	7	Cartridge fan
3	Delivery assembly	8	Residual toner full sensor
4	RD sensor assembly	9	Residual-toner-feed motor
5	Tray-pickup assembly		

Figure 3-36 Major component locations (3 of 3)

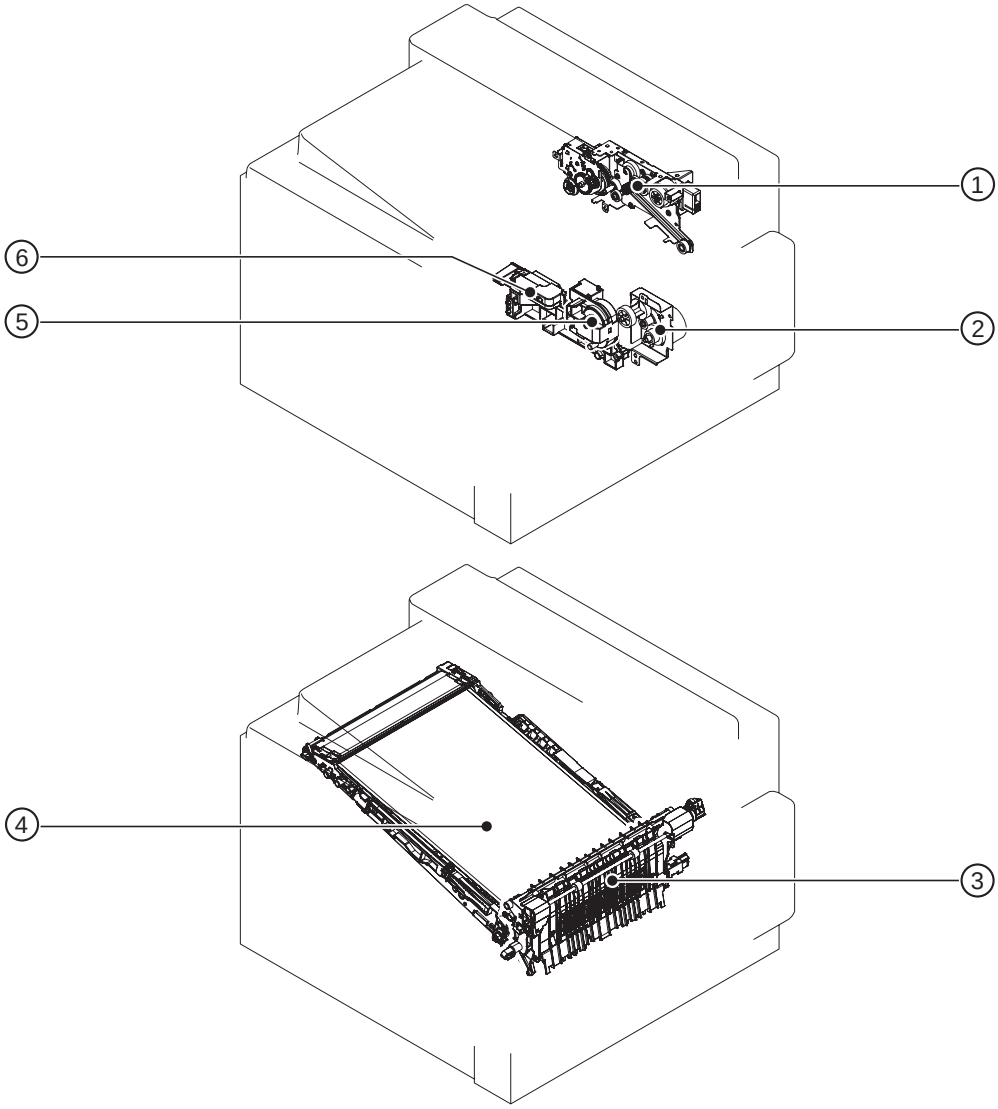

Item	Description
1	Fuser-drive assembly
2	Tray-pickup drive assembly
3	Secondary transfer assembly
4	ITB
5	Lifter-drive assembly
6	Lifter base assembly

Figure 3-37 Motors, fans, and rollers component locations

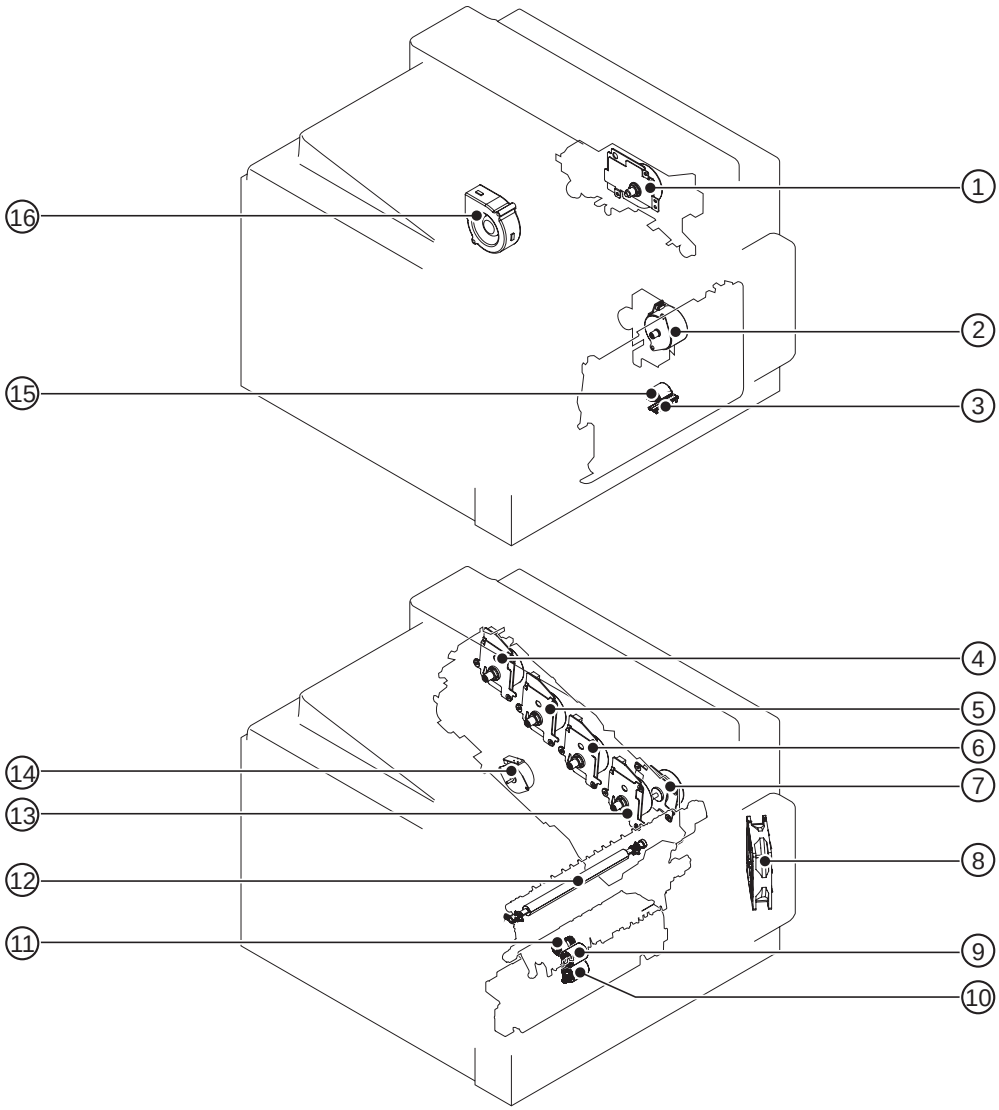

Item	Description	Item	Description
1	Fuser motor	9	Tray 2 feed roller
2	Pickup motor	10	Tray 2 separation roller
3	Tray 1 separation pad	11	Tray 2 pickup roller
4	Yellow drum motor	12	Secondary transfer roller
5	Magenta drum motor	13	Black drum motor
6	Cyan drum motor	14	Developing-disengagement motor
7	ITB motor	15	Tray 1 pickup roller
8	Power supply fan	16	Exhaust fan

Figure 3-38 PCA component locations

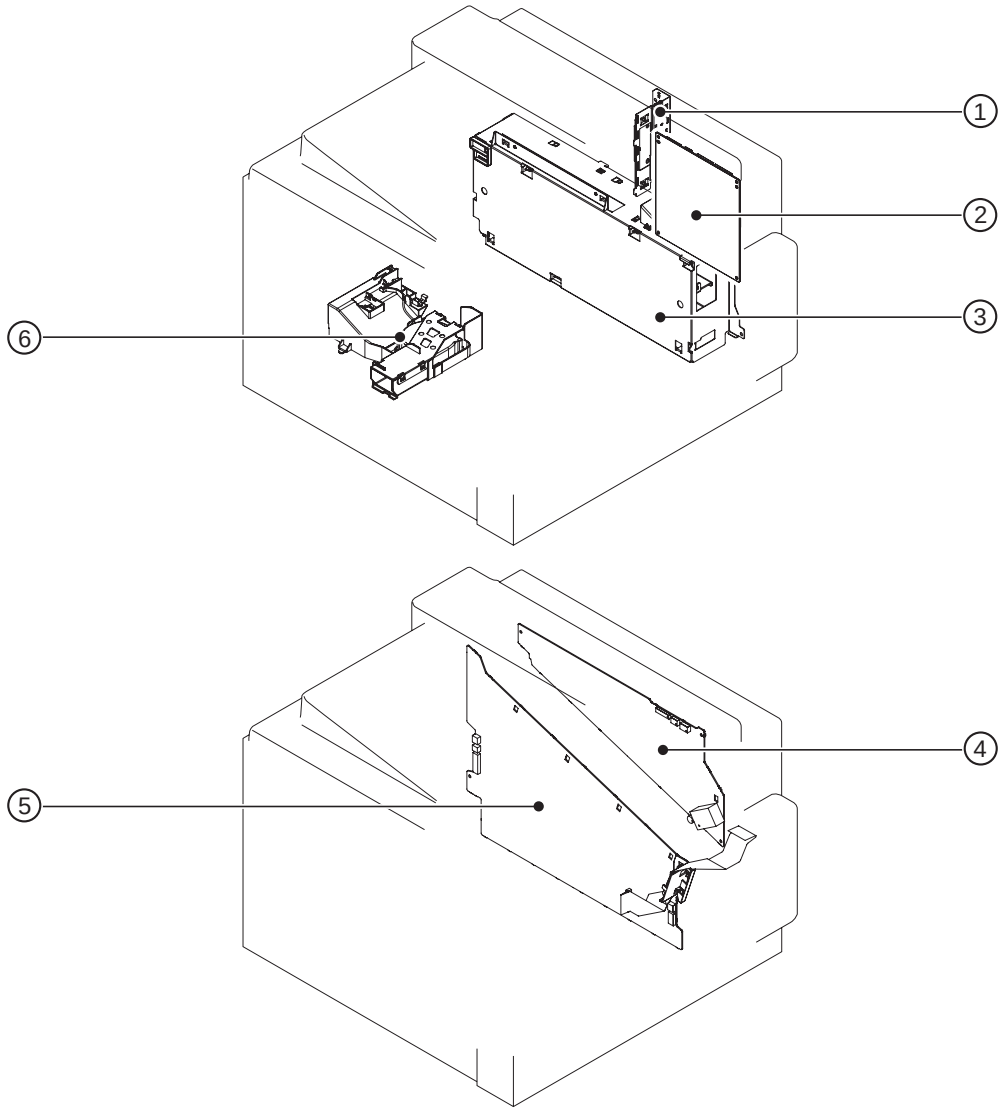

Item	Description	Item	Description
1	Interconnect board (ICB)	4	High-voltage power supply upper (HVPS-T)
2	DC controller PCA	5	High-voltage power supply lower (HVPS-D)
3	Low-voltage power supply	6	Environment sensor PCA

Figure 3-39 Optional paper feeder (1 x 500-sheet) component locations (1 of 2)

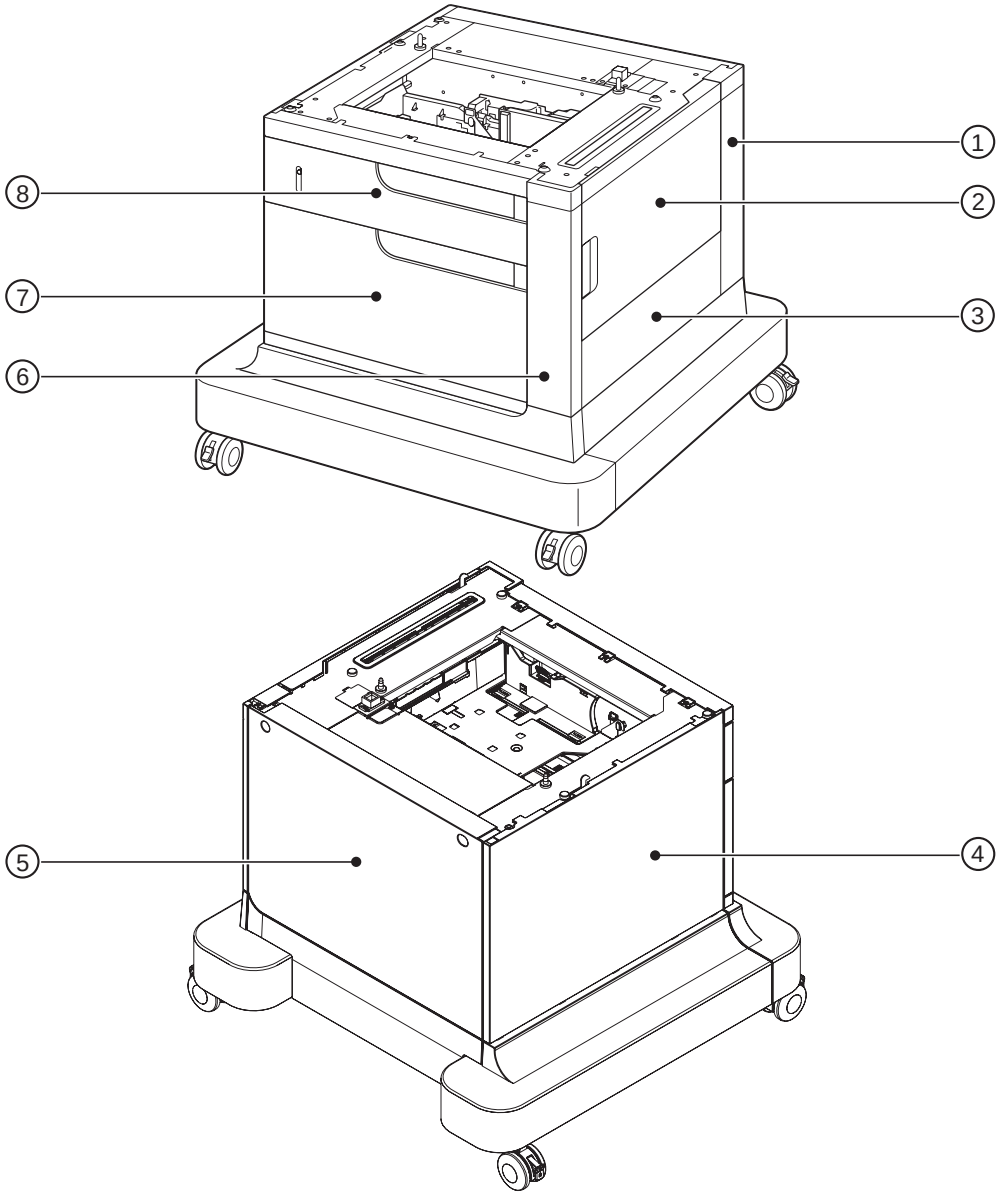

Item	Description	Item	Description
1	Rear-right cover	5	Rear cover
2	Right door	6	Right front cover
3	Right cover	7	Front door
4	Left cover	8	Tray 3

Figure 3-40 Optional paper feeder (1 x 500-sheet) component locations (2 of 2)

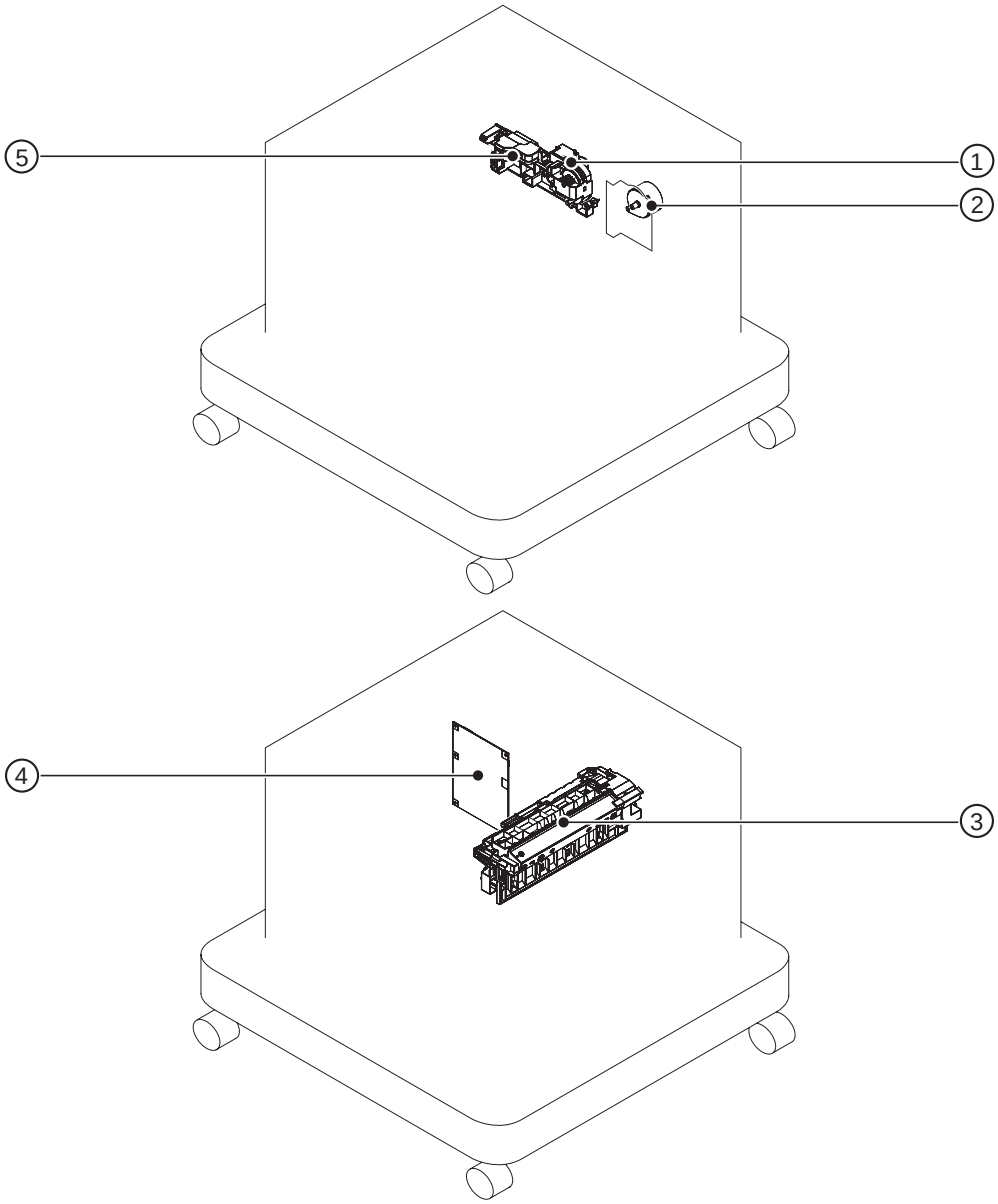

Item	Description	Item	Description
1	Lifter-drive assembly	4	Controller PCA
2	Pickup motor	5	Lifter base assembly
3	Pickup assembly		

Figure 3-41 Optional paper feeder (3 x 500-sheet) component locations (1 of 2)

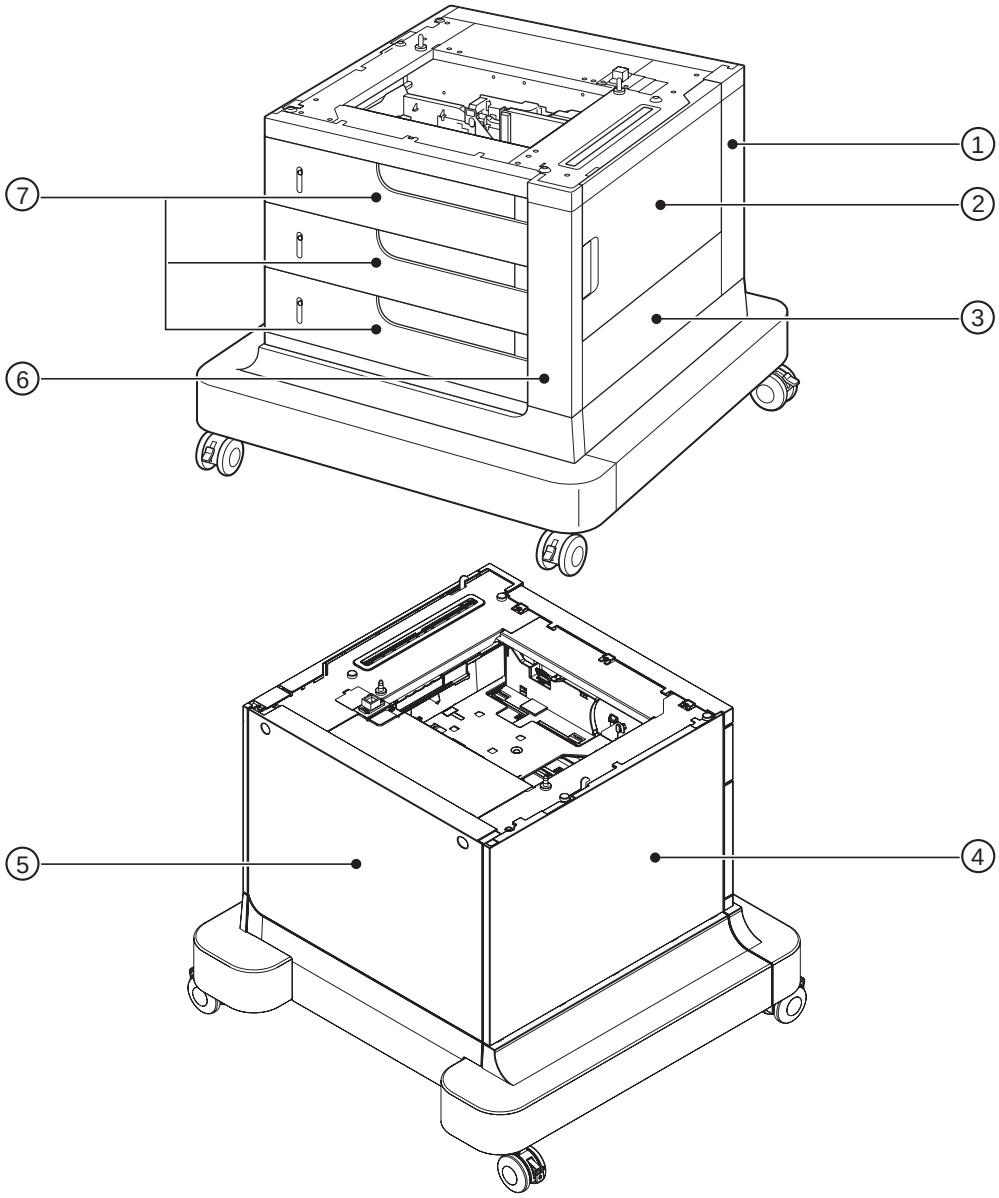

Item	Description	Item	Description
1	Rear right cover	5	Rear cover
2	Right door	6	Right front cover
3	Right cover	7	Trays 3, 4, and 5
4	Left cover		

Figure 3-42 Optional paper feeder (3 x 500-sheet) component locations (2 of 2)

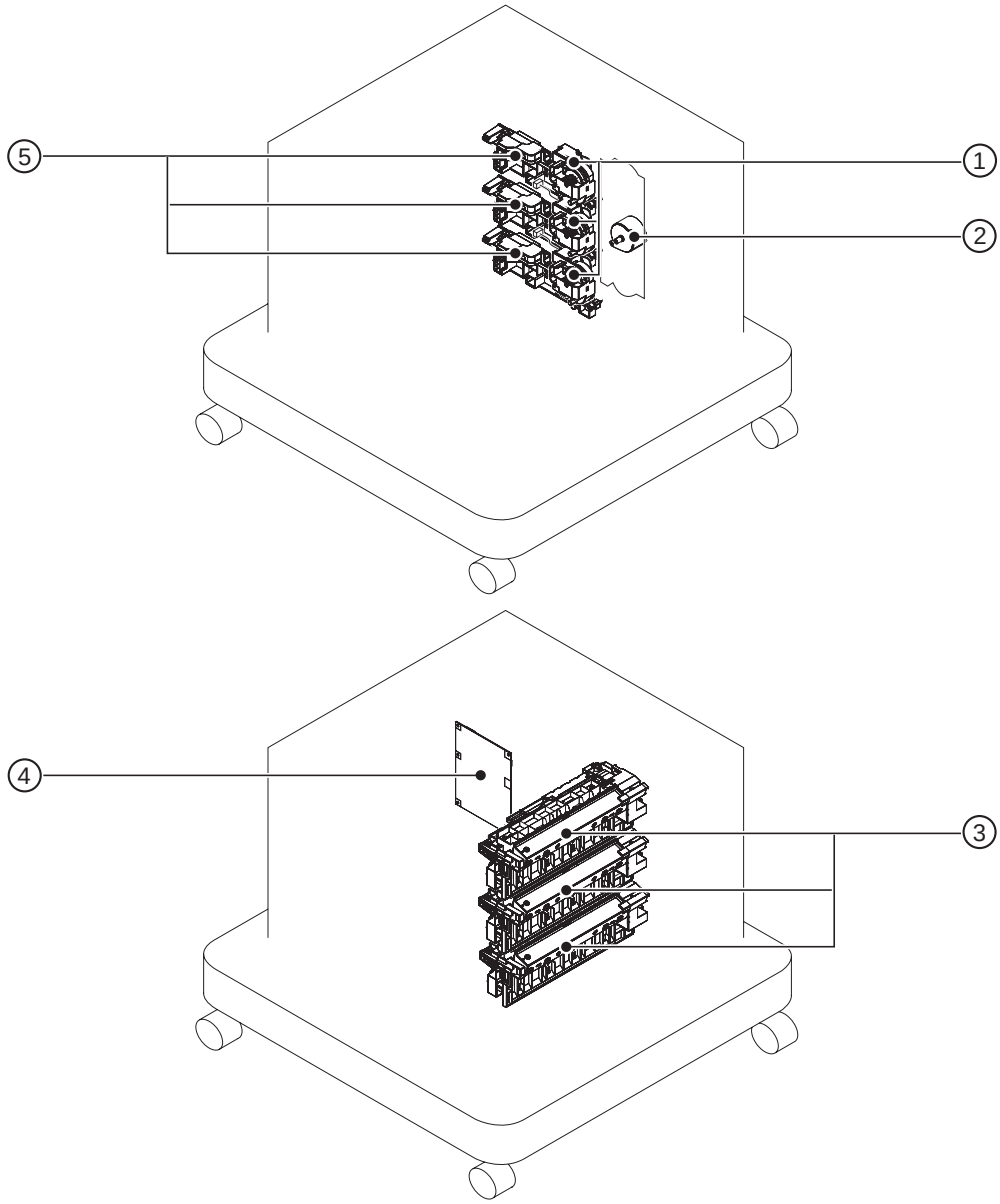

Item	Description	Item	Description
1	Lifter-drive assembly (Trays 3, 4, and 5)	4	Controller PCA
2	Pickup motor	5	Lifter base assembly (Trays 3, 4, and 5)
3	Pickup assembly (Trays 3, 4, and 5)		

General timing chart

Figure 3-43 General timing chart

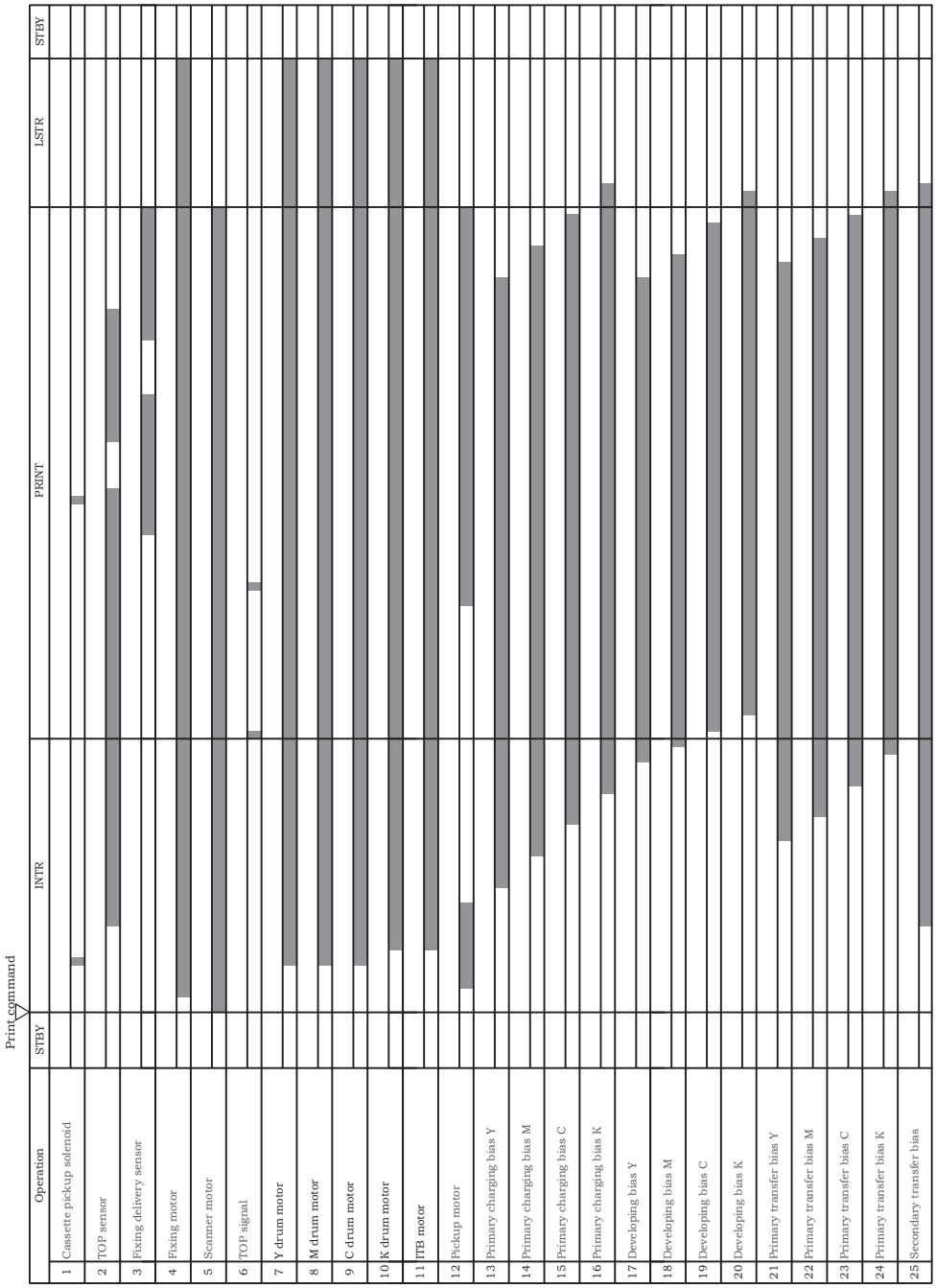

Circuit diagrams

Figure 3-44 General circuit diagram (1 of 2)

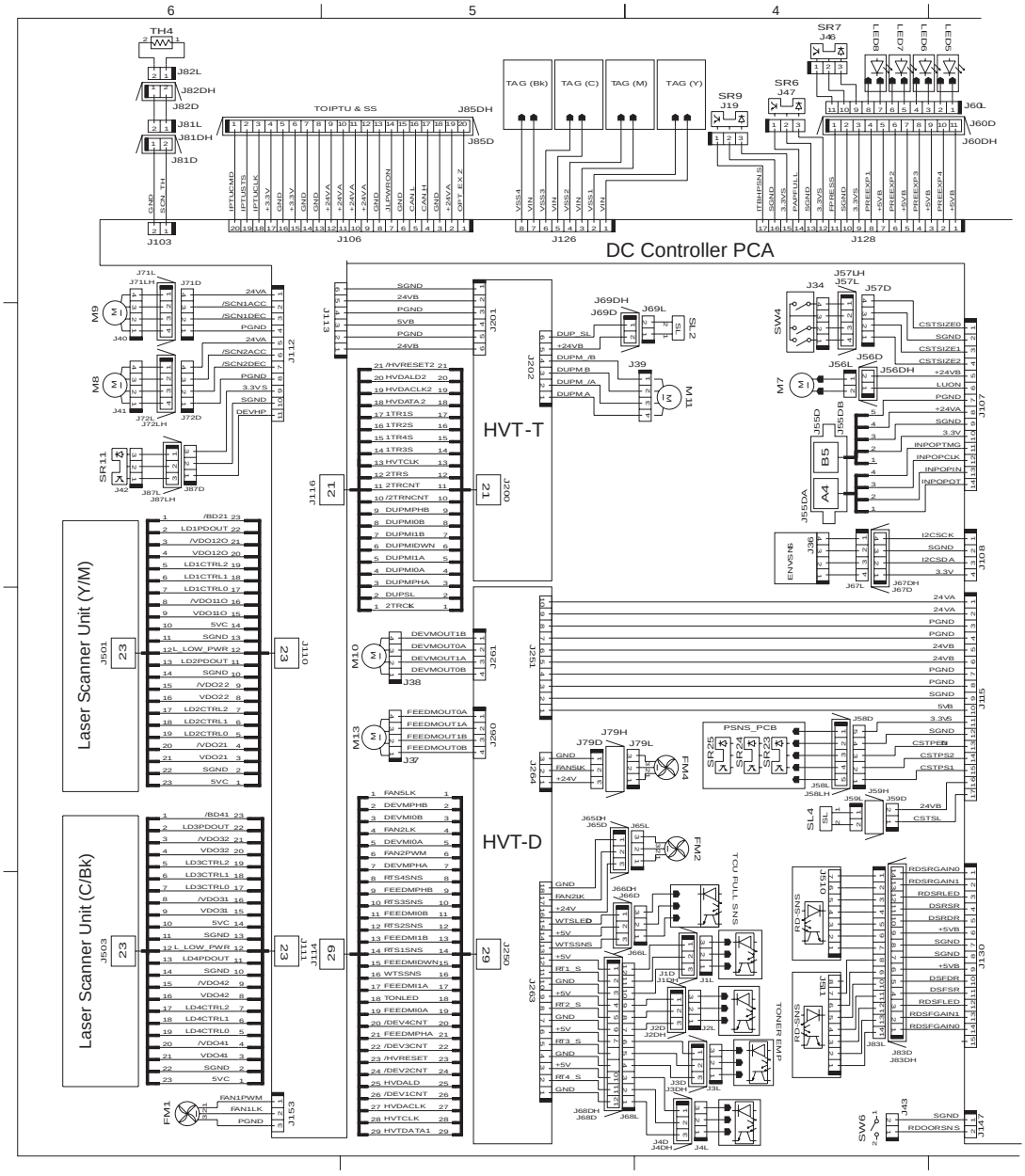

Figure 3-45 General circuit diagram (1 of 2)

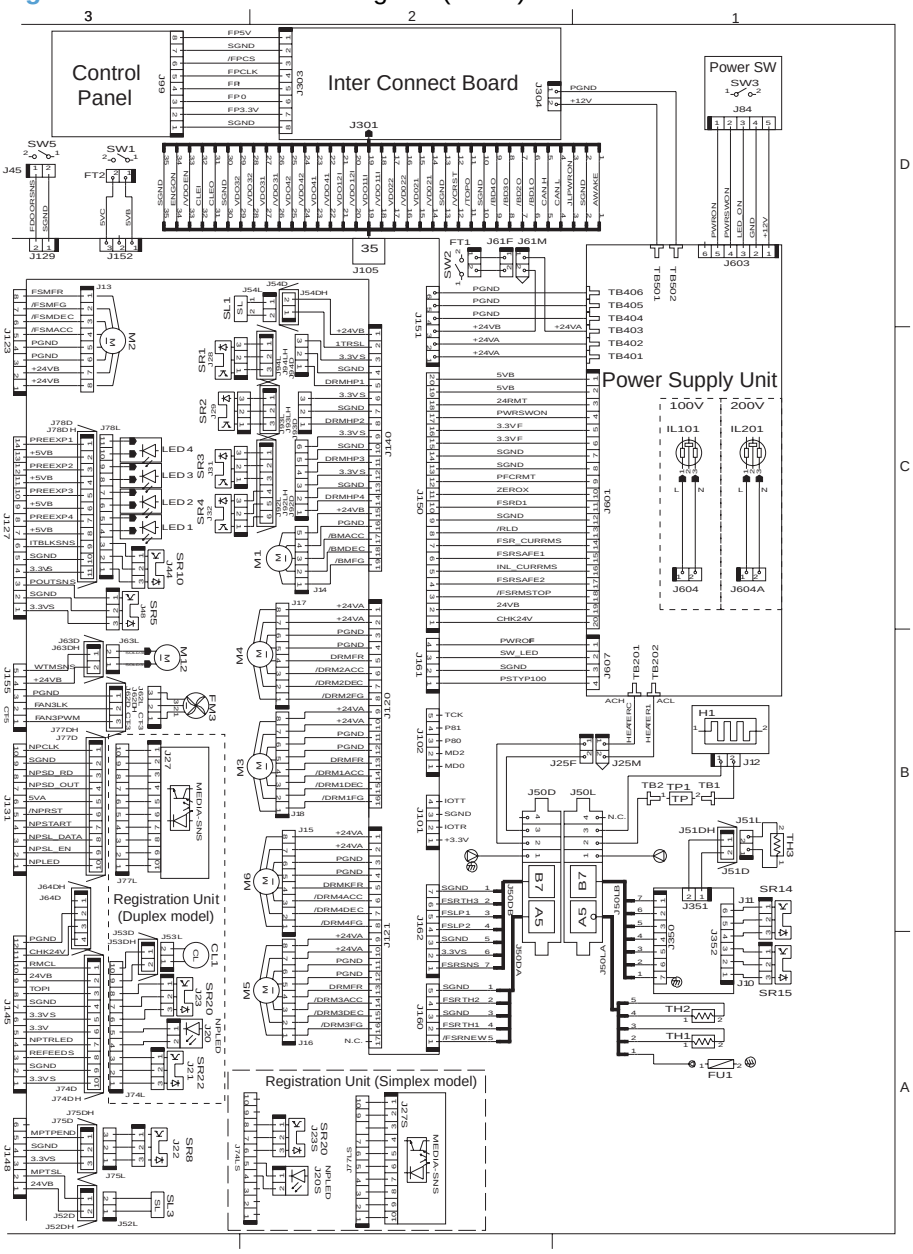

Figure 3-46 Paper feeder circuit diagram (1 X 500-sheet)

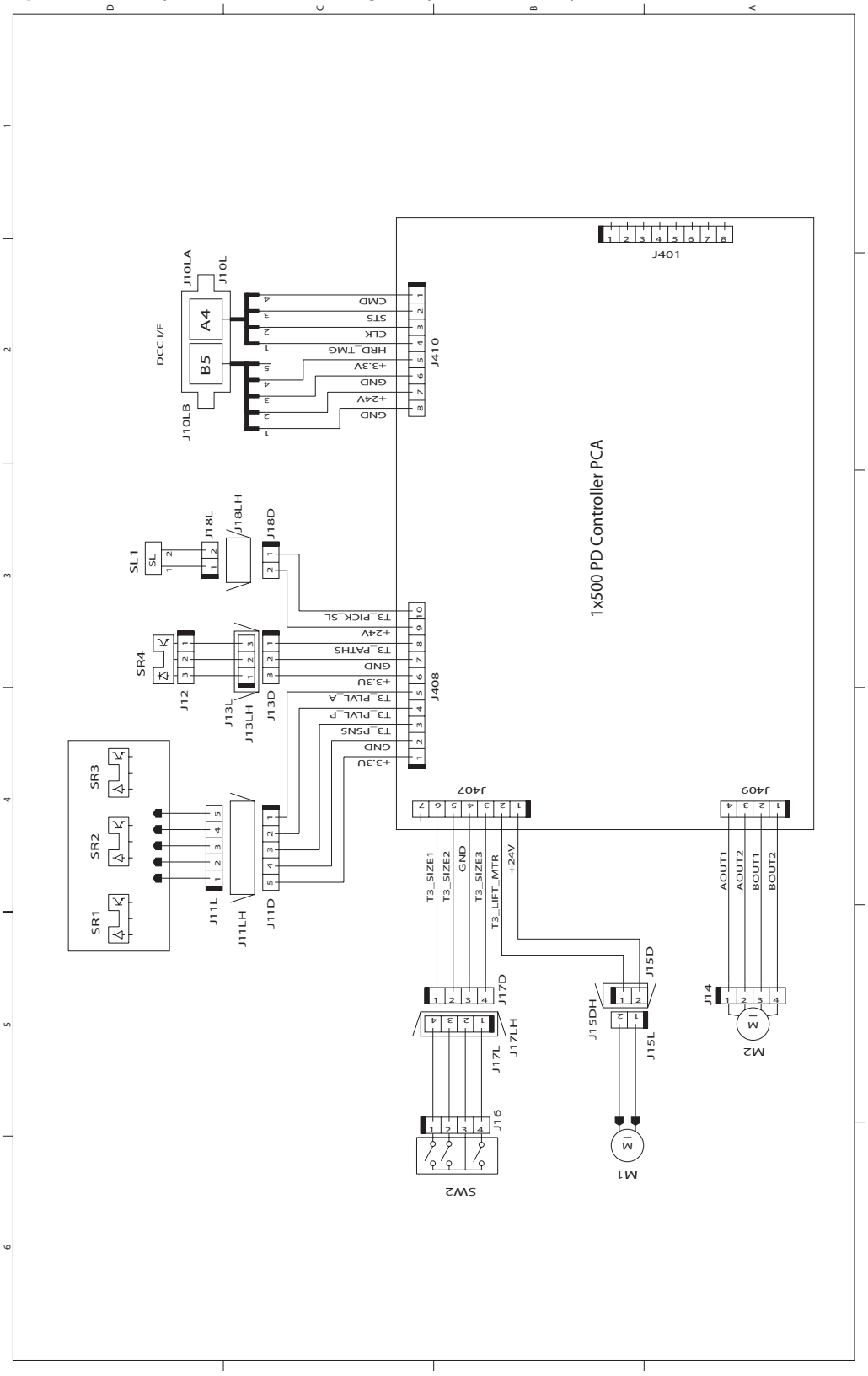

Figure 3-47 Paper feeder circuit diagram (3 X 500-sheet)

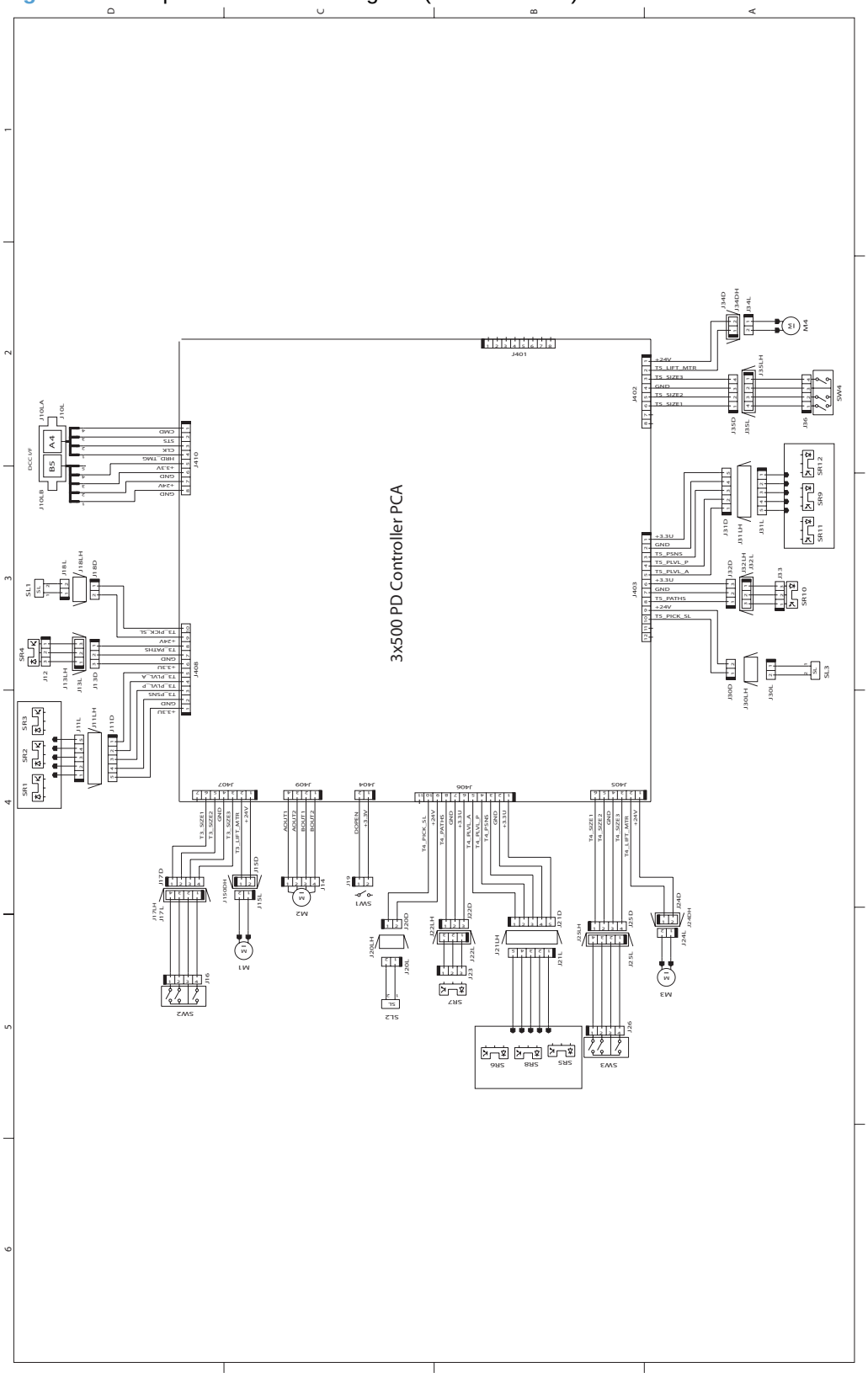

HP Easy Printer Care

Open the HP Easy Printer Care software

Use one of the following methods to open the HP Easy Printer Care software:

- On the **Start** menu, select **Programs**, select **Hewlett-Packard**, select **HP Easy Printer Care**, and then click **Start HP Easy Printer Care**.
- In the Windows system tray (in the lower-right corner of the desktop), double-click the HP Easy Printer Care icon.
- Double-click the desktop icon.

HP Easy Printer Care software sections

HP Easy Printer Care software can provide information about multiple HP products that are on your network as well as any products that are directly connected to your computer. Some of the items that are in the following table might not be available for every product.

The Help button (**?**) in the upper-right corner of each page provides more detailed information about the options on that page.

Section	Options
Device List tab When you open the software, this is the first page that appears. NOTE: To return to this page from any tab, click **My HP Printers** in the left side of the window.	• **Devices** list: Shows the products that you can select. NOTE: The product information appears either in list form or as icons, depending on the setting for the **View as** option. • The information on this tab includes current alerts for the product. • If you click a product in the list, the HP Easy Printer Care opens the **Overview** tab for that product.
Compatible Printers	Provides a list of all the HP products that support HP Easy Printer Care software.
Find Other Printers window Add more products to the **My HP Printers** list	Click the **Find Other Printers** link in the **Devices** list to open the **Find Other Printers** window. The **Find Other Printers** window provides a utility that detects other network printers so that you can add them to the **My HP Printers** list and then monitor those products from your computer.
Overview tab Contains basic status information for the product	• **Device Status** section: This section shows product-identification information and the product status. It indicates product-alert conditions, such as when a print cartridge has reached is estimated end of life. After you correct a problem with the product, click the refresh button in the upper-right corner of the window to update the status. • **Supplies Status** section: Shows detailed supplies status, such as the estimated life remaining in the print cartridge and the status of the paper that is loaded in each tray. • **Supplies Details** link: Opens the supplies status page to view more detailed information about product supplies, ordering information, and recycling information.

Section	Options
Support tab Provides links to support information	• **Device Status** section: This section shows product-identification information and the product status. It indicates product-alert conditions, such as a print cartridge that is at its estimated end of life. After you correct a problem with the product, click the refresh button in the upper-right corner of the window to update the status. • **Device Management** section: Provides links to information about HP Easy Printer Care, to advanced product settings, and to product usage reports. • **Troubleshooting and Help**: Provides links to tools that you can use to resolve problems, to online product support information, and to online HP experts.
Settings tab Configure product settings, adjust print-quality settings, and find information about specific product features NOTE: This tab is not available for some products.	• **About**: Provides general information about this tab. • **General**: Provides information about the product, such as the model number, serial number, and the settings for date and time, if they are available. • **Information Pages**: Provides links to print the information pages that are available for the product. • **Capabilities**: Provides information about product features, such as duplexing, the available memory, and the available printing personalities. Click **Change** to adjust the settings. • **Print Quality**: Provides information about print-quality settings. Click **Change** to adjust the settings. • **Trays / Paper**: Provides information about the trays and how they are configured. Click **Change** to adjust the settings. • **Restore Defaults**: Provides a way to restore the product settings to the factory defaults. Click **Restore** to restore the settings to the defaults.
HP Proactive Support NOTE: This item is available from the **Overview** and **Support** tabs.	When enabled, HP Proactive Support routinely scans your printing system to identify potential problems. Click the **more info** link to configure how frequently the scans occur. This page also provides information about available updates for product software, firmware, and HP printer drivers. You can accept or decline each recommended update.
Supplies Ordering button Click the **Supplies Ordering** button on any tab to open the **Supplies Ordering** window, which provides access to online supplies ordering. NOTE: This item is available from the **Overview** and **Support** tabs.	• Ordering list: Shows the supplies that you can order for each product. To order a certain item, click the **Order** check box for that item in the supplies list. You can sort the list by product, or by the supplies that need to be ordered the soonest. The list contains supplies information for every product that is in the **My HP Printers** list. • **Shop Online for Supplies** button: Opens the HP SureSupply Web site in a new browser window. If you have checked the **Order** check box for any items, the information about those items can be transferred to the Web site, where you will receive information on options for purchasing your selected supplies. • **Print Shopping List** button: Prints the information for the supplies that have the **Order** check box selected.

Section	Options
Alert Settings link NOTE: This item is available from the **Overview** and **Support** tabs.	Click **Alert Settings** to open the Alert Settings window, in which you can configure alerts for each product. • Alerting is on or off: Activates or deactivates the alerts feature. • **Printer Alerts**: Select the option to receive alerts for critical errors only, or for any error. • **Job Alerts**: For products that support it, you can receive alerts for specific print jobs.
Color Access Control NOTE: This item is available only for HP color products that support Color Access Control. NOTE: This item is available from the **Overview** and **Support** tabs.	Use this feature to permit or restrict color printing.

Internal print-quality test pages

Print-quality-troubleshooting pages

Use the built-in print-quality-troubleshooting pages to help diagnose and solve print-quality problems.

1. Press the Home button.
2. Press the down arrow ▼ to highlight **DIAGNOSTICS**, and then press the OK button.
3. Press the down arrow ▼ to highlight **PQ TROUBLESHOOTING**, and then press the OK button to print the pages.

The product returns to the **Ready** state after printing the print-quality-troubleshooting pages. Follow the instructions on the pages that print out.

Figure 3-48 Print-quality troubleshooting procedure

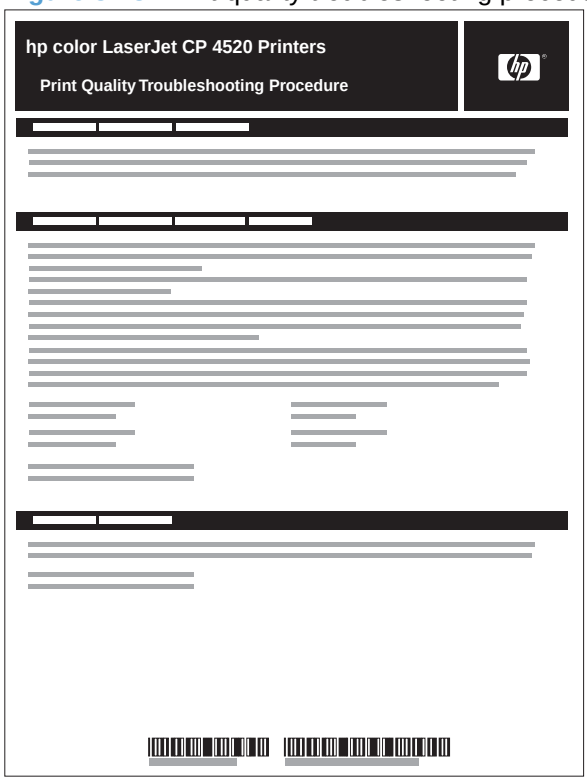

Figure 3-49 Yellow print-quality troubleshooting page

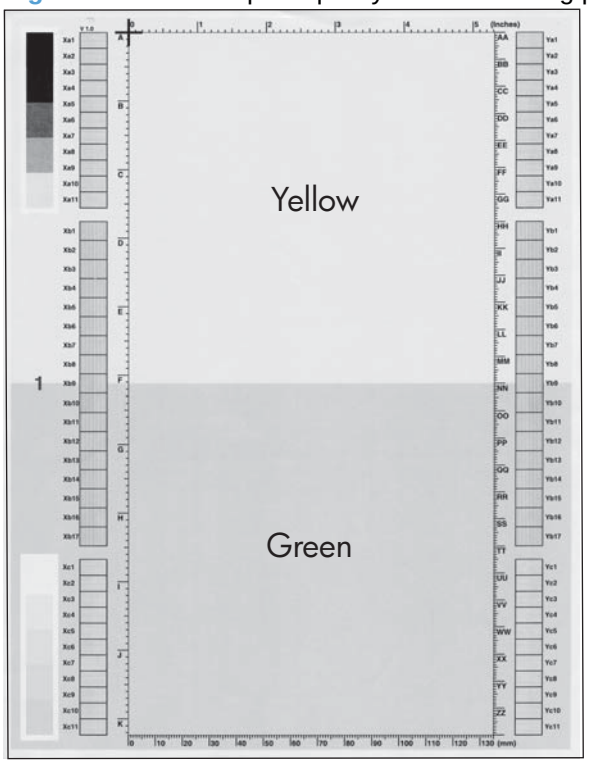

Figure 3-50 Yellow comparison page

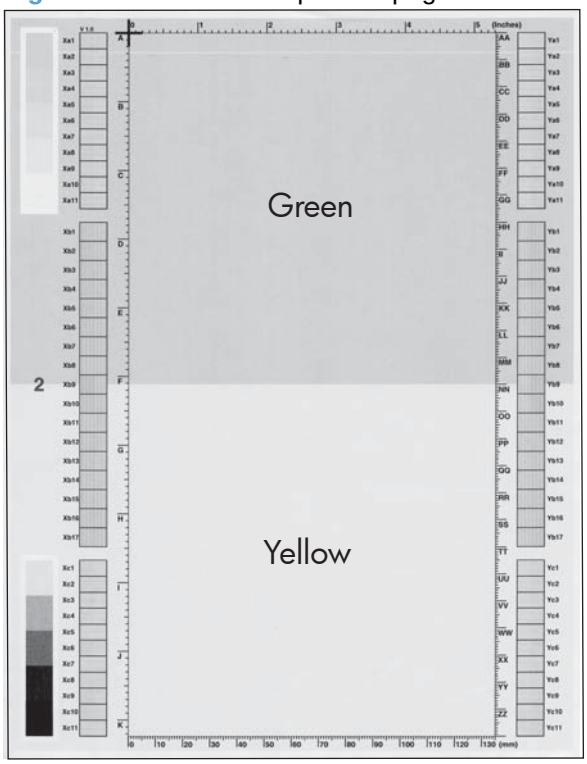

Yellow cannot be easily seen unless combined with cyan, so half of each page is yellow and the other half is an amplified version of yellow problems (green half). Compare the yellow on page one with the corresponding green on page two for defects. You can also check the cyan page for defects.

Figure 3-51 Black print-quality troubleshooting page

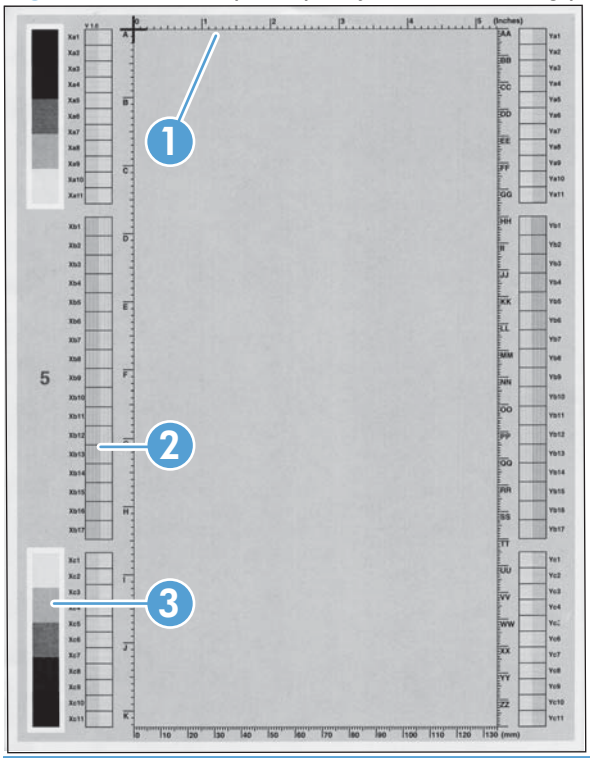

1. Grids	The grids are in inches and millimeters. They are label with letters and numbers so that defects can be described by position and by distance between repeats.
2. Color plane registration (CPR) bars	After printing, the box with no extra color in each area on each page shows how far off the CPR of that color is. Each page has two process direction areas and three scan direction areas that are labeled x and y and 1–11. The page should be fed by the long edge. Each square from the center equals 42 microns.
3. Color ramp patches	Used to detect offset for the OPC or developer in the image drum or offset in the fuser.

NOTE: To get further assistance in print quality troubleshooting, go to www.hp.com/support/cljcp4025 or www.hp.com/support/cljcp4525 and select PQ Troubleshooting Tools.

Diagnostics page

Use the diagnostics page to evaluate problems with color plane registration, EP parameters, and print quality.

1. Press the Home button.
2. Press the down arrow ▼ to highlight **DIAGNOSTICS**, and then press the OK button.
3. Press the down arrow ▼ to highlight **PRINT DIAGNOSTICS PAGE**, and then press the OK button to print the page.

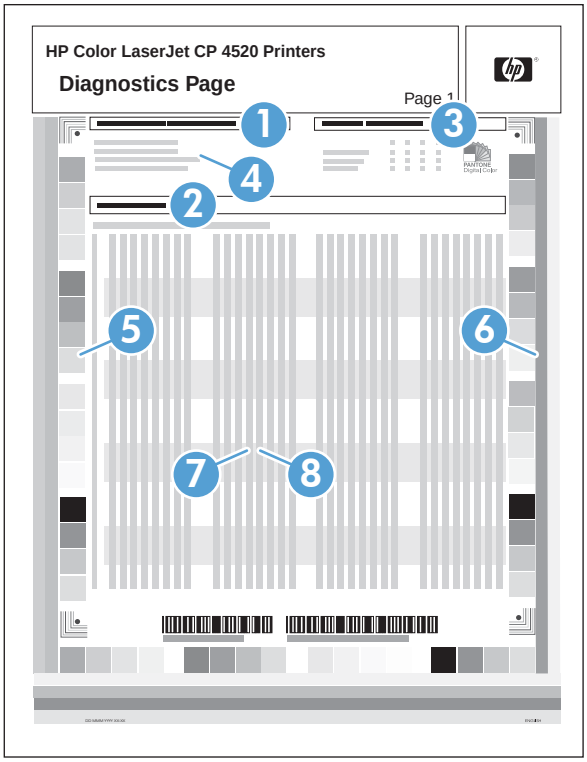

1	Calibration information
2	Parameters
3	Color density
4	Color plane registration
5	Primary colors
6	Secondary colors
7	Temperature values (22M)
8	Humidity values (22N)

Cleaning page

Create and use the cleaning page

1. Press the Home button ⌂.
2. Press the up arrow or down arrow ▲/▼ to highlight the **CONFIGURE DEVICE** menu, and then press the OK button.
3. Press the up arrow or down arrow ▲/▼ to highlight the **PRINT QUALITY** menu, and then press the OK button.
4. If the product does not have automatic two-sided printing, press the up arrow or down arrow ▲/▼ to highlight the **CREATE CLEANING PAGE** option, and then press the OK button. If the product has automatic two-sided printing, go to step 5.
5. Press the up arrow or down arrow ▲/▼ to highlight the **PROCESS CLEANING PAGE** option, and then press the OK button.
6. Discard the printed page. The task is complete.

Configuration page

Depending on the model, up to three pages print when you select **PRINT CONFIGURATION**. In addition to the main configuration page, an embedded Jetdirect configuration page prints.

Configuration page

Use the configuration page to view current product settings, to help troubleshoot product problems, or to verify installation of optional accessories, such as memory (DIMMs), paper trays, and printer languages.

1. Press the Home button.
2. Press the down arrow ▼ to highlight **INFORMATION**, and then press the OK button.
3. Press the down arrow ▼ to highlight **PRINT CONFIGURATION**, and then press the OK button.

The message **PRINTING CONFIGURATION** displays on the control panel until the product finishes printing the configuration page. The product returns to the **Ready** state after printing the configuration page.

NOTE: If the product is configured with EIO cards (for example, an HP Jetdirect Print Server) or an optional hard-disk drive, an additional configuration page will print that provides information about those devices.

Figure 3-52 Configuration page

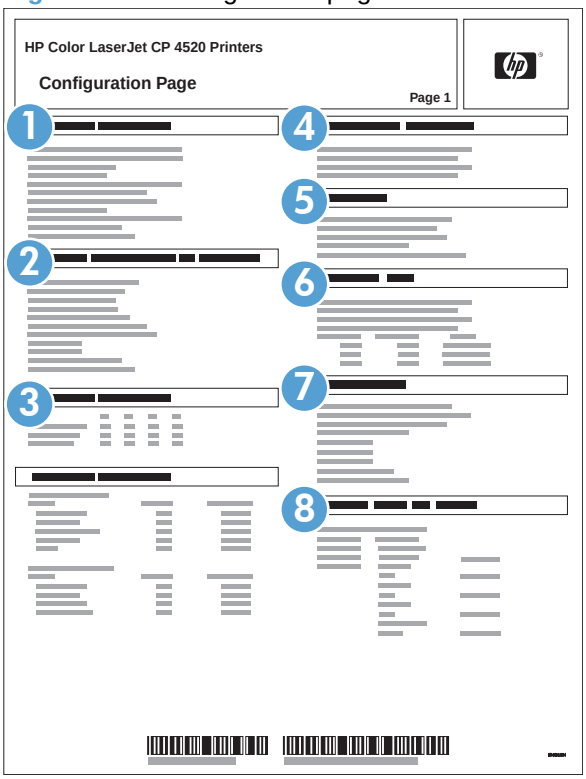

1	Printer information
2	Installed personalities and options
3	Color density
4	Calibration information

5	Memory
6	Event log
7	Security
8	Paper trays and options

HP embedded Jetdirect page

The second configuration page is the HP embedded Jetdirect page, which contains the following information:

Figure 3-53 HP embedded Jetdirect page

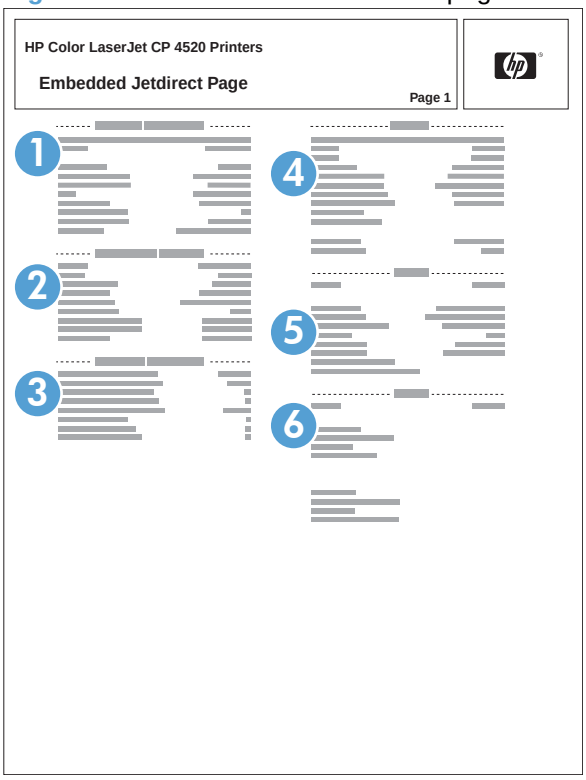

1	**HP Jetdirect Configuration** indicates the product status, model number, hardware firmware version, port select, port configuration, auto negotiation, manufacturing identification, and manufactured date.
2	**Security Settings** information
3	**Network Statistics** indicates the total packets received, unicast packets received, bad packets received, framing errors received, total packets transmitted, unsendable packets, transmit collisions, and transmit late collisions.
4	**TCP/IP** information, including the IP address
5	**IPv4** information
6	**IPv6** information

Always make sure the status line under the HP Jetdirect configuration lines indicates "I/O Card Ready".

Embedded protocol page

The embedded protocol page contains the following information:

Figure 3-54 Embedded protocol page

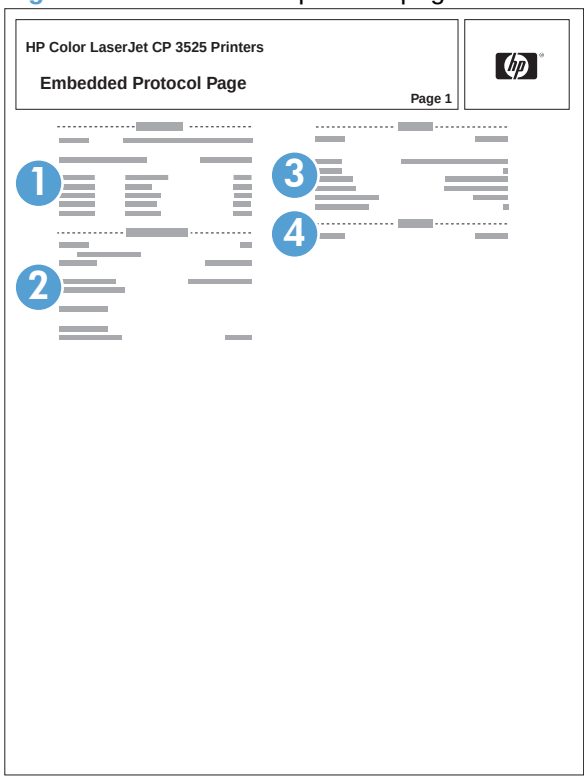

1	IPX/SPX
2	Novell/NetWare
3	AppleTalk
4	DLC/LLC

Finding important information on the configuration pages

Certain information, such as the firmware date codes, the IP address, and the e-mail gateways, is especially helpful while servicing the product. This information is on the various configuration pages.

Table 3-12 Important information on the configuration pages

Type of information	Specific information	Configuration page
Firmware date codes When you use the remote firmware upgrade procedure, all of these firmware components are upgraded.	DC controller	Look on the main configuration page, under “Device Information.”
	Firmware datecode	Look on the main configuration page, under “Device Information.”
	Embedded Jetdirect firmware version	Look on the embedded Jetdirect page, under “HP Jetdirect Configuration.”
Accessories and internal storage All optional devices that are installed on the product should be listed on the main configuration page. In addition, separate pages print for the optional paper handling devices and the fax accessory. These pages list more-detailed information for those devices.	External disk (optional)	Look on the main configuration page, under “Installed Personalities and Options.” Shows model and capacity.
	Embedded HP Jetdirect	Look on the main configuration page, under “Installed Personalities and Options.” Shows model and ID.
	Total RAM	Look on the main configuration page, under “Memory.”
	Duplex unit	Look on the main configuration page, under “Paper Trays and Options.”
Additional 500-sheet feeders	Additional 500-sheet feeders	Look on the main configuration page, under “Paper Trays and Options.”
Engine cycles and event logs Total page counts and maintenance kit counts are important for ongoing product maintenance. The configuration page lists only the three most recent errors. To see a list of the 50 most recent errors, print an event log from the **DIAGNOSTICS** menu.	Engine cycles	Look on the main configuration page, under “Device Information.”
Pages since last maintenance (print engine maintenance count)	Pages since last maintenance (print engine maintenance count)	Look on the main configuration page, under “Device Information.”
Event-log information	Event-log information	Look on the main configuration page, under “Event log.”

Color-band test

The color-band test page shows bands of colors that can indicate whether or not the product is producing colors correctly.

1. Press the Home button.
2. Press the down arrow ▼ to highlight **DIAGNOSTICS**, and then press the OK button.
3. Press the down arrow ▼ to highlight **COLOR BAND TEST**, and then press the OK button.
4. Press the down arrow ▼ to highlight **PRINT TEST PAGE**, and then press the OK button.

Print-quality troubleshooting tools

Repetitive defects ruler

If defects repeat at regular intervals on the page, use this ruler to identify the cause of the defect. Place the top of the ruler at the first defect. The marking that is beside the next occurrence of the defect indicates which component needs to be replaced.

Figure 3-55 Repetitive defects ruler

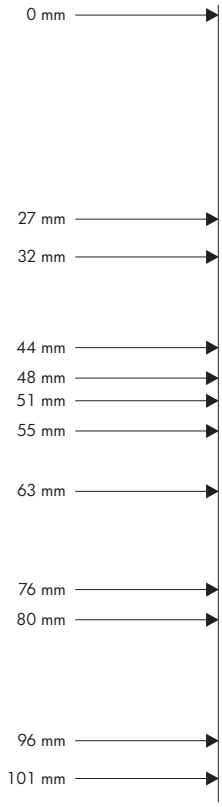

Distance between defects	Product components that cause the defect
27 mm	Print cartridge
32 mm	Print cartridge
44 mm	Transfer unit
48 mm	Print cartridge
51 mm	Transfer roller
55 mm	Print engine
63 mm	Transfer unit
76 mm	Print cartridge
76 mm	Fuser
80 mm	Fuser
96 mm	Print engine
101 mm	Print engine

Calibrate the product

Calibration is a product function that optimizes print quality. If you experience any image-quality problems, calibrate the product.

1. Press the Home button ⌂.
2. Press the down arrow ▼ to highlight the **CONFIGURE DEVICE** menu, and then press the OK button.
3. Press the down arrow ▼ to highlight the **PRINT QUALITY** menu, and then press the OK button.
4. Press the down arrow ▼ to highlight the **FULL CALIBRATE NOW** or **QUICK CALIBRATE NOW** setting, and then press the OK button.
   - **FULL CALIBRATE NOW**: takes about three minutes and performs color plane registration, drum speed adjustment, and Dmax and Dhalf adjustments. Use **FULL CALIBRATE NOW** if colors are misaligned or appear blurry. **FULL CALIBRATE NOW** runs automatically after a new transfer belt is installed. **FULL CALIBRATE NOW** must be run manually after a laser scanner is replaced.
   - **QUICK CALIBRATE NOW**: takes approximately 1 minute and performs Dmax and Dhalf calibrations. Use **QUICK CALIBRATE NOW** if colors are wrong, highlights are missing, or if colors are too dark or too light.

Control panel menus

Control panel menus

You can control the product by changing settings in the menus on the product control panel. Use the control panel to access features not supported by the printer driver or software application, and to configure trays for paper size and type.

Show Me How menu

The **SHOW ME HOW** menu prints pages that provide more information about the product. You can print the pages and keep them near the product for convenient reference.

To display: Press the Home button, and then select the **SHOW ME HOW** menu.

Item	Explanation
CLEAR JAMS	Provides instructions for clearing jams on the product.
LOAD TRAYS	Provides instructions for loading and configuring trays.
LOAD SPECIAL MEDIA	Provides instructions for loading special print media such as envelopes, transparencies, and labels.
LOAD MEDIA 4 X 6 (10 X 15CM)	Provides instructions for loading 4 x 6 media.
PRINT BOTH SIDES	Provides instructions for printing on both sides of the paper (duplex printing).
SUPPORTED PAPER	Provides a list of the supported paper and print media.
PRINT HELP GUIDE	Prints a page that shows links to additional help on the Web.

Retrieve job menu

Use the **RETRIEVE JOB** menu to view listings of all stored jobs.

To display: Press the Home button, and then select the **RETRIEVE JOB** menu.

Item	Sub-item	Sub-item	Description
NO STORED JOBS			This message appears if no jobs are currently stored on the product.
<USER NAME>			Each user who has stored jobs is listed by name. Select the appropriate user name to see a list of stored jobs.

Item	Sub-item	Sub-item	Description
	ALL JOBS (WITH PIN)	**PRINT** **PRINT AND DELETE** • **COPIES** • **JOB** • **CUSTOM VALUE** **DELETE**	This message appears if a user has two or more stored jobs that require a PIN. If **PRINT** or **PRINT AND DELETE** is selected then the PIN will be requested. If the jobs have different PINs, only the jobs with the PIN entered will be printed. If the PIN does not match any of the jobs, an error message is displayed. Either the **PRINT** option or the **PRINT AND DELETE** option displays, depending on the type of jobs listed. If the stored jobs are Personal or Proof and Hold jobs, **PRINT AND DELETE** is displayed. These jobs are deleted after they are printed. If **PRINT** is displayed, there is at least one Quick Copy or standard stored job. When **PRINT** is selected, any Personal or Proof and Hold jobs in the list will be printed and deleted. When **PRINT** or **PRINT AND DELETE** is selected, the **COPIES** option allows you to specify the number of copies of the job to print. The default is 1 and the range is from 1 to 3,200. The following copy options are also available: • Select the **JOB** option to print the number of copies specified in the driver. • Select the **CUSTOM VALUE** option to specify the number of copies of the job to be printed. The number of copies that were specified in the driver are multiplied by the number of copies specified on the control panel. For example, if you specified two copies in the driver and specify two copies on the control panel, a total of four copies of the job are printed.

Item	Sub-item	Sub-item	Description
	ALL JOBS (NO PIN)	**PRINT** **PRINT AND DELETE** • **COPIES** • **JOB** • **CUSTOM VALUE** **DELETE**	This message appears if a user has two or more stored jobs that do not require a PIN. Either the **PRINT** option or the **PRINT AND DELETE** option displays, depending on the type of jobs listed. If the stored jobs are Personal or Proof and Hold jobs, **PRINT AND DELETE** is displayed. These jobs are deleted after they are printed. If **PRINT** is displayed, there is at least one Quick Copy or standard stored job. When **PRINT** is selected, any Personal or Proof and Hold jobs in the list will be printed and deleted. When **PRINT** or **PRINT AND DELETE** is selected, the **COPIES** option allows you to specify the number of copies of the job to print. The default is 1 and the range is from 1 to 3,200. The following copy options are also available: • Select the **JOB** option to print the number of copies specified in the driver. • Select the **CUSTOM VALUE** option to specify the number of copies of the job to be printed. The number of copies that were specified in the driver are multiplied by the number of copies specified on the control panel. For example, if you specified two copies in the driver and specify two copies on the control panel, a total of four copies of the job are printed.
	<JOB NAME X>	**PRINT** **PRINT AND DELETE** • **COPIES** **DELETE**	Each individual job for the user is listed by name. Either the **PRINT** option or the **PRINT AND DELETE** option displays, depending on the type of jobs listed. If **PRINT AND DELETE** is displayed, all of the stored jobs are either Personal or Proof and Hold jobs. These jobs are deleted after they are printed. If **PRINT** is displayed, there is at least one Quick Copy or Standard stored job. If there are any Personal or Proof and Hold jobs they will be printed and deleted, even though the **PRINT** option was selected. When **PRINT** or **PRINT AND DELETE** is selected, a **COPIES** option allows you to specify the number of copies of the job to print. The default is 1 and the range is from 1 to 3,200.

Information menu

Use the **INFORMATION** menu to access and print specific product information.

To display: Press the Home button, and then select the **INFORMATION** menu.

Item	Description
PRINT MENU MAP	Prints the control-panel menu map, which shows the layout and current settings of the control-panel menu items.
PRINT CONFIGURATION	Prints the product configuration pages, which show the printer settings and installed accessories.
PRINT SUPPLIES STATUS PAGE	Prints the approximate remaining life for the supplies; reports statistics on total number of pages and jobs processed, serial number, page counts, and maintenance information. HP provides approximations of the remaining life for the supplies as a customer convenience. The actual remaining supply levels might be different than the approximations provided.
SUPPLIES STATUS	Displays the approximate status of the print cartridges, transfer kit, fuser kit, and toner collection unit in a scrollable list. Press the OK button to open help for each item.
PRINT USAGE PAGE	Prints a count of all paper sizes that have passed through the product; lists whether they were simplex, duplex, monochrome, or color; and reports the page count.
PRINT COLOR USAGE JOB LOG	Prints the color-use statistics for the printer.
PRINT DEMO PAGE	Prints a demonstration page.
PRINT RGB SAMPLES	Prints color samples for different RGB values. Use the samples as a guide for matching printed colors.
PRINT CMYK SAMPLES	Prints color samples for different CMYK values. Use the samples as a guide for matching printed colors.
PRINT FILE DIRECTORY	Prints the name and directory of files stored in the product.
PRINT PCL FONT LIST	Prints the available PCL fonts.
PRINT PS FONT LIST	Prints the available PS fonts.

Paper handling menu

Use this menu to configure input trays by size and type. It is important to correctly configure the trays with this menu before you print for the first time. This menu also appears when you close Trays 2-5 and press the OK button after the prompt to set the paper size and type.

To display: Press the Home button, and then select the **PAPER HANDLING** menu.

NOTE: If you have used other HP LaserJet product models, you might be accustomed to configuring Tray 1 to **First** mode or **Cassette** mode. On HP Color LaserJet Enterprise CP4020-CP4520 Series printers, setting Tray 1 to **ANY SIZE** and **ANY TYPE** is equivalent to **First** mode. Setting Tray 1 to a setting other than **ANY SIZE** or **ANY TYPE** is equivalent to **Cassette** mode.

Menu item	Value	Description
TRAY 1 SIZE	A list of available sizes appears.	Allows you to configure the paper size for Tray 1. The default is **ANY SIZE**. See the product user guide for a complete list of available sizes.
TRAY 1 TYPE	A list of available types appears.	Allows you to configure the paper type for Tray 1. The default is **ANY TYPE**. See the product user guide for a complete list of available types.
TRAY <X> SIZE X = 2 or optional 3, 4, or 5	A list of available sizes appears.	Allows you to configure the paper size for Tray 2 or optional Tray 3, 4, or 5. These trays can detect the paper size by the guides in the tray. See the product user guide for a complete list of available sizes.
TRAY <X> TYPE X = 2 or optional 3, 4, or 5	A list of available types appears.	Allows you to configure the paper type for Tray 2 or optional Tray 3, 4, or 5. The default is **PLAIN**. See the product user guide for a complete list of available types.

Manage supplies menu

Use this menu to configure how the product alerts you when supplies are approaching the estimated end of life.

To display: Press the Home button, and then select the **MANAGE SUPPLIES** menu.

NOTE: Values that have an asterisk (*) are the factory-default values. Some menu items have no default.

Menu item	Sub-menu item	Values	Description
AT VERY LOW	**BLACK CARTRIDGE**	**STOP** **PROMPT TO CONTINUE*** **CONTINUE**	Select what the product should do when the print cartridge is very near the end of its estimated life. **STOP**: The product stops until you replace the cartridge. **PROMPT TO CONTINUE**: The product stops until you clear the prompt message. After the prompt message is cleared, there will not be another message indicating that the supply needs to be replaced. **CONTINUE**: The product provides an alert message, but it continues printing. There will not be another message indicating that the supply needs to be replaced.

Menu item	Sub-menu item	Values	Description
	COLOR CARTRIDGES	**STOP** **PROMPT TO CONTINUE*** **CONTINUE** **PRINT IN BLACK**	Select what the product should do when the print cartridge is very near the end of its estimated life. **STOP**: The product stops until you replace the cartridge. **PROMPT TO CONTINUE**: The product stops until you clear the prompt message. **CONTINUE**: The product provides an alert message, but it continues printing. **PRINT IN BLACK**: The product prints in black when a color cartridge is near the end of its estimated life.
	TRANSFER KIT	**STOP** **PROMPT TO CONTINUE*** **CONTINUE**	**STOP**: The product stops until you replace the transfer kit. **PROMPT TO CONTINUE**: The product stops until you clear the prompt message. **CONTINUE**: The product provides an alert message, but it continues printing.
	FUSER KIT	**STOP** **PROMPT TO CONTINUE*** **CONTINUE**	**STOP**: The product stops until you replace the fuser kit. **PROMPT TO CONTINUE**: The product stops until you clear the prompt message. **CONTINUE**: The product provides an alert message, but it continues printing.
	TONER COLLECTION UNIT	**STOP*** **PROMPT TO CONTINUE** **CONTINUE**	**STOP**: The product stops until you replace the toner collection unit. **PROMPT TO CONTINUE**: The product stops until you clear the prompt message. **CONTINUE**: The product provides an alert message, but it continues printing. **NOTE:** Using a Toner collection unit after a prompt or alert message might result in toner leakage, especially when replacing the Toner collection unit.

Menu item	Sub-menu item	Values	Description
USER DEFINED LOW	**YELLOW CARTRIDGE** **MAGENTA CARTRIDGE** **CYAN CARTRIDGE** **BLACK CARTRIDGE**	Range from 0–100%	Use the arrow buttons to enter the percentage of estimated cartridge life at which you want the product to alert you that the cartridge is low.
	TRANSFER KIT	Range from 0–100% Default is 2%	Use the arrow buttons to enter the percentage of estimated cartridge life at which you want the product to alert you.
	FUSER KIT	Range from 0–100% Default is 2%	Use the arrow buttons to enter the percentage of estimated cartridge life at which you want the product to alert you.
SUPPLY MESSAGES	**LOW MESSAGE**	**ON*** **OFF**	Select how the product displays the supply information. **LOW MESSAGE**: Determines whether or not a low supply message is displayed on the control panel.
	LEVEL GAUGE	**ON*** **OFF**	**LEVEL GAUGE**: Determines whether or not a supply level gauge appears on the control panel.

Menu item	Sub-menu item	Values	Description
RESTRICT COLOR USE		**ENABLE COLOR*** **COLOR IF ALLOWED** **DISABLE COLOR**	This menu item controls the authorization of color printing. **DISABLE COLOR**: All jobs sent to the product print only in monochrome. **ENABLE COLOR**: All color pages sent to the product print in color. **COLOR IF ALLOWED**: A permissions database is referenced to verify if color pages are printed in color or monochrome.
COLOR/BLACK MIX		**AUTO*** **MOSTLY COLOR PAGES** **MOSTLY BLACK PAGES**	These menu selections allow you to balance the trade-off between supply life and performance. **AUTO**: The product software uses an algorithm based on printing data to achieve the best output. **MOSTLY COLOR PAGES**: This selection provides the highest performance. If most of the printing is in color, this selection will not negatively affect supply life. **MOSTLY BLACK PAGES**: This selection conserves the most supply life and is the best choice if most of the printing is done in black and white.

Configure device menu

The **CONFIGURE DEVICE** menu allows you to change the default printing settings, adjust the print quality, change the system configuration and I/O options, and reset the default settings.

Printing menu

These settings affect only jobs without identified properties. Most jobs identify all of the properties and override the values set from this menu.

To display: Press the Home button, select the **CONFIGURE DEVICE** menu, and then select the **PRINTING** menu.

NOTE: Values that have an asterisk (*) are the factory-default values. Some menu items have no default.

Menu item	Sub-menu item	Values	Description
COPIES		Range: 1 - 32000	Allows you to set the default number of copies for print jobs. The default number is **1**.
DEFAULT PAPER SIZE		A list of available sizes appears.	Allows you to set the default paper size.
DEFAULT CUSTOM PAPER SIZE	• **UNIT OF MEASURE** • **X DIMENSION** • **Y DIMENSION**		Allows you to set the default size for any custom print job that does not specify the dimensions. The default unit of measure is **MILLIMETERS**.
DUPLEX		**OFF*** **ON**	Allows you to enable or disable two-sided printing. **NOTE:** This menu is available only on models that have automatic duplexing.
DUPLEX BINDING		**LONG EDGE*** **SHORT EDGE**	Allows you to change the binding edge for two-sided printing. **NOTE:** This menu is available only on models that have automatic duplexing.
OVERRIDE A4/LETTER		**NO** **YES***	Allows you to set the product to print an A4 job on letter-size paper when no tray is configured for A4 paper, or to print on A4-size paper when no tray is configured for letter paper.
MANUAL FEED		**OFF*** **ON**	Setting this option to **ON** makes **MANUAL FEED** the default for jobs that do not select a tray. The Autoselect option in the printer driver overrides this option.
COURIER FONT		**REGULAR*** **DARK**	Allows you to select a version of the Courier font. The **DARK** setting is an internal Courier font available on HP LaserJet Series III printers and older.
WIDE A4		**NO** * **YES**	Allows you to change the printable area of A4 paper. If you select **NO**, the printable area is seventy-eight 10-pitch characters on a single line. If you select **YES**, the printable area is eighty 10-pitch characters on a single line.
PRINT PS ERRORS		**OFF*** **ON**	Allows you to select to print PS error pages.
PRINT PDF ERRORS		**OFF*** **ON**	Allows you to select to print PDF error pages.

PCL sub-menu

This menu configures settings for the printer control language.

To display: Press the Home button, select the **CONFIGURE DEVICE** menu, select the **PRINTING** menu, and then select the **PCL** menu.

NOTE: Values that have an asterisk (*) are the factory-default values. Some menu items have no default.

Item	Values	Description
FORM LENGTH	Range: 5-128 lines	Sets vertical spacing for default paper size. The default is 60.
ORIENTATION	**PORTRAIT*** **LANDSCAPE**	Allows you to set the default page orientation to portrait or landscape.
FONT SOURCE	A list of available font sources displays.	Selects the font source. The default is **INTERNAL**.
FONT NUMBER	Range: 0-102	The product assigns a number to each font and lists the numbers on the PCL font list. The default is 0.
FONT PITCH	Range: 0.44-99.99	Selects the font pitch. This item might not appear, depending on the font selected. The default is 10.00.
FONT POINT SIZE	Range: 4.00-999.75	Selects the font point size. The default is 12.00.
SYMBOL SET	A list of available symbol sets displays.	Selects any one of several available symbol sets at the product control panel. A symbol set is a unique grouping of all the characters in a font. **PC-8** or **PC-850** is recommended for line-draw characters. The default is **PC-8**.
APPEND CR TO LF	**NO*** **YES**	Select **YES** to append a carriage return to each line-feed that is encountered in backward-compatible PCL jobs (pure text, no job control). Some environments indicate a new line by only the line-feed control code. Use this option to append the required carriage return to each line feed.
SUPPRESS BLANK PAGES	**NO*** **YES**	When generating your own PCL, extra form feeds are included that would cause a blank page to be printed. Select **YES** for form feeds to be ignored if the page is blank.
MEDIA SOURCE MAPPING	**STANDARD*** **CLASSIC**	The PCL5 **MEDIA SOURCE MAPPING** command selects an input tray by a number that maps to the various available trays and feeders. • The **STANDARD** numbering is based on newer HP LaserJet printers with updated changes to the numbering of trays and feeders. • The **CLASSIC** numbering is based on HP LaserJet 4 printers and earlier models.

Print Quality menu

To display: Press the Home button, select the **CONFIGURE DEVICE** menu, and then select the **PRINT QUALITY** menu.

NOTE: Values that have an asterisk (*) are the factory-default values. Some menu items have no default.

Item	Sub-item	Sub-item	Values	Description
ADJUST COLOR	**HIGHLIGHTS** • **CYAN DENSITY** • **MAGENTA DENSITY** • **YELLOW DENSITY** • **BLACK DENSITY**		Range from +5 to –5. Default is 0.	Adjust the darkness or lightness of highlights on a printed page. Lower values represent lighter highlights on a printed page, and higher values represent darker highlights on a printed page.
	MIDTONES • **CYAN DENSITY** • **MAGENTA DENSITY** • **YELLOW DENSITY** • **BLACK DENSITY**		Range from +5 to –5. Default is 0.	Adjust the darkness or lightness of midtones on a printed page. Lower values represent lighter midtones on a printed page, and higher values represent darker midtones on a printed page.
	SHADOWS • **CYAN DENSITY** • **MAGENTA DENSITY** • **YELLOW DENSITY** • **BLACK DENSITY**		Range from +5 to –5. Default is 0.	Adjust the darkness or lightness of shadows on a printed page. Lower values represent lighter shadows on a printed page, and higher values represent darker shadows on a printed page.
	RESTORE COLOR VALUES			Restore the color settings by resetting the density values of each color.
SET REGISTRATION				For each tray, setting the registration shifts the margin alignment to center the image on the page from top to bottom and from left to right. You can also align the image on the front with the image printed on the back.
	ADJUST TRAY <X>			Perform the alignment procedure for each tray. When it creates an image, the product scans across the page from side to side as the sheet feeds from top to bottom into the product.
		PRINT TEST PAGE		Print a test page and instructions for setting the registration of the image location.

Item	Sub-item	Sub-item	Values	Description
		X1 SHIFT **Y1 SHIFT** **X2 SHIFT** **Y2 SHIFT**	Range: -5 mm to +5 mm	The scan direction is referred to as X. X1 is the scan direction for a single-sided page or for the second side of a two-sided page. X2 is the scan direction for the first side of a two-sided page. The feed direction is referred to as Y. Y1 is the feed direction for a single-sided page or for the second side of a two-sided page. Y2 is the feed direction for the first side of a two-sided page.
AUTO SENSE MODE	**TRAY 1 SENSING**		**FULL SENSING** **EXPANDED SENSING*** **TRANSPARENCY ONLY**	Sets the sensing option for Tray 1 for paper types using **AUTO SENSE** mode. When **FULL SENSING** is selected, the product senses every page and switches modes accordingly. The product can distinguish light paper, plain paper, heavy paper, glossy paper, tough paper, or transparencies. Using this mode significantly reduces print speed. Use it only when you are printing on mixed paper types. When **EXPANDED SENSING** is selected, the product senses only the first page and assumes the rest of the pages are the same type. The product can distinguish light paper, plain paper, heavy paper, glossy paper, tough paper, or transparencies. When **TRANSPARENCY ONLY** is selected, the product senses only the first page. The product can distinguish transparencies from other paper types.
	TRAY <X> SENSING		**EXPANDED SENSING*** **TRANSPARENCY ONLY**	Sets the sensing option for Trays 2-5 for paper types using **AUTO SENSE** mode. When **EXPANDED SENSING** is selected, the product senses only the first few pages and assumes the rest of the pages are the same type. The product can distinguish light paper, plain paper, heavy paper, glossy paper, tough paper, or transparencies. The product senses the paper type when you turn it on and after you open and close a tray. When **TRANSPARENCY ONLY** is selected, the product senses only the first page. The product can distinguish transparencies from other paper types.

Item	Sub-item	Sub-item	Values	Description
ADJUST PAPER TYPES	A list of paper types displays.	**PRINT MODE** **RESISTANCE MODE** **HUMIDITY MODE** **PRE-ROTATION MODE** **FUSER TEMP MODE** **PAPER CURL MODE**	A list of print modes displays.	Configure the print mode that is associated with each media type.
	RESTORE MODES			Use this feature to return all paper type-mode settings to the factory-default settings.
OPTIMIZE	A list of available options displays.			Allows you to optimize various print modes to address print quality issues.
	RESTORE OPTIMIZE			Use this feature to return all the settings in the **OPTIMIZE** menu to the factory-default values.
QUICK CALIBRATE NOW				Performs a partial product calibration.
FULL CALIBRATE NOW				Performs all product calibrations.
DELAY CALIBRATION AT WAKE/POWER-ON			**NO** **YES*** • Select **NO** to have the product calibrate immediately when it wakes up or is turned on. The product will not print any jobs until it finishes calibrating. • Select **YES** to enable a product that is asleep to accept print jobs before it calibrates. It may start calibrating before it has printed all the jobs it has received. This option allows quicker printing when coming out of sleep mode or when you turn the product on, but print quality might be reduced.	This menu controls the timing of the calibration when the product wakes up or is turned on. **NOTE:** For best results, allow the product to calibrate before printing. Print jobs performed before calibration might not be of the highest quality.
RESOLUTION			**Image REt 3600*** **1200x1200 dpi**	Sets the resolution at which the product prints. The default value is **Image REt 3600**. Try the **1200x1200 dpi** setting to improve printing for detailed line work or small text.

Item	Sub-item	Sub-item	Values	Description
EDGE CONTROL			**OFF** **LIGHT** **NORMAL*** **MAXIMUM**	The Edge Control setting determines how edges are rendered. Edge control has two components: adaptive halftoning and trapping. Adaptive halftoning increases edge sharpness. Trapping reduces the effect of color-plane misregistration by overlapping the edges of adjacent objects slightly. • **OFF** turns off both trapping and adaptive halftoning. • **LIGHT** sets trapping at a minimal level, and adaptive halftoning is on. • **NORMAL** is the default trapping setting. Trapping is at a medium level and adaptive halftoning is on. • **MAXIMUM** is the most aggressive trapping setting. Adaptive halftoning is on.
AUTO CLEANING			**OFF*** **ON**	When auto-cleaning is on, the product prints a cleaning page when the page count reaches the **CLEANING INTERVAL** setting.
CLEANING INTERVAL			**500*** **1000** **2000** **5000** **10000** **20000**	Specify the number of pages that are printed before a cleaning page is automatically printed. This item appears only when the **AUTO CLEANING** option is set to **ON**.
AUTO CLEANING SIZE			**LETTER*** **A4**	Specify the paper size that is used to print the cleaning page. This item appears only when the **AUTO CLEANING** option is set to **ON**.

Item	Sub-item	Sub-item	Values	Description
CREATE CLEANING PAGE				Prints a page of instructions for cleaning excess toner off the pressure roller in the fuser. **NOTE:** This option is available only for the HP Color LaserJet CP4025n printer and the HP Color LaserJet CP4525n printer.
PROCESS CLEANING PAGE				Allows you to create and process a cleaning page for cleaning the pressure roller in the fuser. When the cleaning process runs, a cleaning page is printed. This page can be discarded. **NOTE:** For the HP Color LaserJet CP4025n printer and the HP Color LaserJet CP4525n printer, you must first select the **CREATE CLEANING PAGE** option.

System setup menu

Use the **SYSTEM SETUP** menu to change product-configuration defaults such as sleep mode, product personality (language), and jam recovery.

To display: Press the Home button, select the **CONFIGURE DEVICE** menu, and then select the **SYSTEM SETUP** menu.

NOTE: Values that have an asterisk (*) are the factory-default values. Some menu items have no default.

Item	Sub-item	Values	Description
DATE/TIME	**DATE**	**- - - - /[MMM]/[DD] YEAR =** **[YYYY]/- - - /[DD] MONTH=** **[YYYY]/[MMM]/- - DAY=**	Allows you to set the correct date. The range for the year is 2008 to 2037.
	DATE FORMAT	**YYYY/MMM/DD*** **MMM/DD/YYYY** **DD/MMM/YYYY**	Allows you to choose the order in which the year, month, and day appear in the date.
	TIME	**- - :[MM] [PM] HOUR =** **[HH]: - - [PM] MINUTE=** **[HH]:[MM] - - AM/PM=**	Allows you to select from various configurations for the **TIME** format. Different wizards appear depending on the **TIME FORMAT** selected.
	TIME FORMAT	**12 HOUR*** **24 HOUR**	Allows you to select **12 HOUR** or **24 HOUR** format.
JOB STORAGE LIMIT		Continuous value Range: 1–100 Default = 32	Allows you to specify the number of Quick Copy jobs that can be stored on the product. The default value is 32. The maximum allowed value is 100.
JOB HELD TIMEOUT		**OFF*** **1 HOUR** **4 HOURS** **1 DAY** **1 WEEK**	Allows you to set the amount of time that Quick Copy jobs are kept before being automatically deleted from the queue. This menu item only appears when a hard disk is installed.
SHOW ADDRESS		**AUTO** **OFF***	This item determines whether the product's IP address is shown on the display with the **Ready** message.
TRAY BEHAVIOR			Use this menu to control how the product handles paper trays and related prompts at the control panel.

Item	Sub-item	Values	Description
	USE REQUESTED TRAY	**EXCLUSIVELY*** **FIRST**	**USE REQUESTED TRAY** handles jobs that have specified a specific input tray. Two options are available: • **EXCLUSIVELY**: The product never selects a different tray when the user has indicated that a specific tray should be used, even if that tray is empty. • **FIRST**: The product can pull from another tray if the specified tray is empty, even though the user specifically indicated a tray for the job.
	MANUALLY FEED PROMPT	**ALWAYS*** **UNLESS LOADED**	This option controls whether a manual feed message should appear when the type or size for a job does not match the size or type configured for Tray 1. Two options are available: • **ALWAYS**: A prompt always appears before printing a manual-feed job. • **UNLESS LOADED**: A message appears only if the multipurpose tray is empty or does not match the size or type of the job.
	PS DEFER MEDIA	**ENABLED*** **DISABLED**	This option affects how paper is handled when printing from an Adobe PS print driver. • **ENABLED** uses HP's paper-handling model. • **DISABLED** uses the Adobe PS paper-handling model.
	SIZE/TYPE PROMPT	**DISPLAY*** **DO NOT DISPLAY**	This option controls whether the tray configuration message appears whenever a tray is closed. Two options are available: • **DISPLAY**: This option shows the tray configuration message when a tray is closed. You can configure the tray size or type directly from this message. • **DO NOT DISPLAY**: This option prevents the tray configuration message from automatically appearing.

Item	Sub-item	Values	Description
	USE ANOTHER TRAY	**ENABLED*** **DISABLED**	This option turns on or off the control-panel prompt to select another tray when the specified tray is empty.
	ALTERNATIVE LETTERHEAD MODE	**ON** **OFF***	When this option is **ON** you can load letterhead or preprinted paper the same way for every job, whether printing on one or both sides of the page. **NOTE:** This option is available only for models that have automatic duplexing.
	DUPLEX BLANK PAGES	**AUTO*** **YES**	This option controls how the product handles two-sided jobs (duplexing). Two options are available: • **AUTO**: Enables Smart Duplexing, which instructs the product not to process both sides if the second side is blank. Letterhead and prepunched paper types are exceptions. This can improve print speed. • **YES**: Disables Smart Duplexing and forces the duplexer to flip the sheet of paper even if it is printed on only one side. **NOTE:** This option is available only for models that have automatic duplexing.
	IMAGE ROTATION	**STANDARD** * **ALTERNATE**	Select the **ALTERNATE** setting if you are having trouble aligning images on preprinted forms.
SLEEP DELAY		**1 MINUTE** **3 MINUTES** **5 MINUTES** **10 MINUTES** **15 MINUTES*** **30 MINUTES** **45 MINUTES** **60 MINUTES** **90 MINUTES** **2 HOURS**	Reduces power consumption when the product has been inactive for the selected period. **NOTE:** The **SLEEP MODE** setting in the **RESETS** menu must be on.

Item	Sub-item	Values	Description
WAKE TIME	<DAY OF THE WEEK>	**OFF*** **CUSTOM**	Select the **CUSTOM** option to configure the daily wake time for the product to avoid warm-up or calibration time. Select a day of the week, set the wake time for that day, and then choose whether the wake time should be applied to all days of the week.
OPTIMUM SPEED/ENERGY USAGE		**FASTER FIRST PAGE*** **SAVE ENERGY** **SAVE MORE ENERGY** **SAVE MOST ENERGY**	Controls the fuser cool down behavior. **FASTER FIRST PAGE**: The fuser maintains power and the first page processes faster for any new job that is sent to the product. **SAVE ENERGY**: The fuser reduces power when it is idle. **SAVE MORE ENERGY**: The fuser reduces more power than the **SAVE ENERGY** option. **SAVE MOST ENERGY**: The fuser is turned off and it gradually cools to room temperature. The **SAVE MOST ENERGY** option takes the longest time to print the first page.
DISPLAY BRIGHTNESS		Range is –10 through 10.	Sets the brightness of the control panel display. The default is **0**. This item also controls the viewing angle at which the display is visible.
PERSONALITY		**AUTO*** **PCL** **PDF** **PS**	Sets the default personality to automatic switching, PCL, PDF, or PS modes.
CLEARABLE WARNINGS		**JOB*** **ON**	Sets whether a warning is cleared on the control panel or when another job is sent. • **JOB**: The warning message disappears at the end of the job. • **ON**: The warning message remains until you press the OK button.

Item	Sub-item	Values	Description
AUTO CONTINUE		**OFF** **ON*** 	Determines product behavior when the system generates an Auto Continuable error. • **ON**: Allows the product to continue printing. • **OFF**: Stops the product from printing until the error is cleared by the user.
JAM RECOVERY		**AUTO*** **OFF** **ON**	Sets whether the product will attempt to reprint pages after a jam. If you select **AUTO**, the product reprints pages if enough memory is available for full-speed two-sided printing.
RAM DISK		**AUTO*** **OFF**	Sets how the RAM disk feature is configured. This is only available if there is no hard disk installed and the printer has at least 8 MB of memory. If the **AUTO** setting is enabled, the product determines the optimal RAM disk size based on the amount of available memory. If the **OFF** setting is enabled, the RAM disk is disabled, but a minimal RAM disk is still active.
LANGUAGE		A listing of available languages appears.	Sets the language. The default language is **ENGLISH**.

I/O menu

Items on the I/O (input/output) menu affect the communication between the product and the computer. If the product contains an HP Jetdirect print server, you can configure basic networking parameters by using this submenu. You can also configure these and other parameters through HP Web Jetadmin or the embedded Web server.

For more information on these options, see the product user guide.

To display: Press the Home button, select the **CONFIGURE DEVICE** menu, and then select the **I/O** menu.

NOTE: Values that have an asterisk (*) are the factory-default values. Some menu items have no default.

Item	Sub-item	Values	Description
I/O TIMEOUT		Range: 5 - 300	Allows you to set the product **I/O TIMEOUT** in seconds. The default is 15 seconds. Use this setting to adjust timeout for the best performance. If data from other ports appears in the middle of your print job, increase the timeout value.
EMBEDDED JETDIRECT MENU	See the next table for a list of options.		

Table 3-13 Embedded Jetdirect menu

Item	Sub-item	Sub-item	Sub-item	Description
INFORMATION	**PRINT SEC PAGE**		**YES*** **NO**	**YES**: Prints a page that contains the current security settings on the HP Jetdirect print server. **NO**: A security settings page is not printed.
	TCP/IP	**ENABLE**	**ON*** **OFF**	**ON**: Enable the TCP/IP protocol. **OFF**: Disable the TCP/IP protocol.
	HOST NAME			An alphanumeric string, up to 32 characters, used to identify the product. This name is listed on the HP Jetdirect configuration page. The default host name is NPIxxxxxx, where xxxxxx is the last six digits of the LAN hardware (MAC) address.

Table 3-13 **Embedded Jetdirect menu (continued)**

Item	Sub-item	Sub-item	Sub-item	Description
	IPV4 SETTINGS	**CONFIG METHOD**	**BOOTP** **DHCP*** **AUTO IP** **MANUAL**	Specifies the method that TCP/IPv4 parameters will be configured on the HP Jetdirect print server. Use **BOOTP** (Bootstrap Protocol) for automatic configuration from a BootP server. Use **DHCP** (Dynamic Host Configuration Protocol) for automatic configuration from a DHCPv4 server. If selected and a DHCP lease exists, **DHCP RELEASE** and **DHCP RENEW** menus are available to set DHCP lease options. Use **AUTO IP** for automatic link-local IPv4 addressing. An address in the form 169.254.x.x is assigned automatically. If you set this option to **MANUAL**, use the **MANUAL SETTINGS** menu to configure TCP/IPv4 parameters.
		MANUAL SETTINGS	**IP ADDRESS** **SUBNET MASK** **DEFAULT GATEWAY**	(Available only if **CONFIG METHOD** is set to **MANUAL**) Configure parameters directly from the product control panel: **IP ADDRESS**: The unique IP address (n.n.n.n) of the product, where n is a value from 0 to 255. **SUBNET MASK**: The subnet mask (n.n.n.n) for the product, where n is a value from 0 to 255. **DEFAULT GATEWAY**: The IP address of the gateway or router used for communications with other networks.
		DEFAULT IP	**AUTO IP*** **LEGACY**	Specify the IP address to default to when the print server is unable to obtain an IP address from the network during a forced TCP/IP reconfiguration (for example, when manually configured to use BootP or DHCP). **NOTE:** This feature assigns a static IP address that might interfere with a managed network. **AUTO IP**: A link-local IP address 169.254.x.x is set. **LEGACY**: The address 192.0.0.192 is set, consistent with older HP Jetdirect products.
		DHCP RELEASE	**NO*** **YES**	This menu appears if **CONFIG METHOD** is set to **DHCP** and a DHCP lease for the print server exists. **NO**: The current DHCP lease is saved. **YES**: The current DHCP lease and the leased IP address are released.

Table 3-13 **Embedded Jetdirect menu (continued)**

Item	Sub-item	Sub-item	Sub-item	Description
		DHCP RENEW	**NO*** **YES**	This menu appears if **CONFIG METHOD** is set to **DHCP** and a DHCP lease for the print server exists. **NO**: The print server does not request to renew the DHCP lease. **YES**: The print server requests to renew the current DHCP lease.
		PRIMARY DNS		Specify the IP address (n.n.n.n) of a Primary DNS Server.
		SECONDARY DNS		Specify the IP address (n.n.n.n) of a Secondary Domain Name System (DNS) Server.
	IPV6 SETTINGS	**ENABLE**	**ON** **OFF***	Use this item to enable or disable IPv6 operation on the print server. **OFF**: IPv6 is disabled. **ON**: IPv6 is enabled.
		ADDRESS	**MANUAL SETTINGS** • **ENABLE** • **ADDRESS**	Use this item to enable and manually configure a TCP/IPv6 address. **ENABLE**: Choose **ON** to enable manual configuration, or **OFF** to disable manual configuration. The default is **OFF**. **ADDRESS**: Use this item to type a 32 hexadecimal digit IPv6 node address that uses the colon hexadecimal syntax.
		DHCPV6 POLICY	**ROUTER SPECIFIED** **ROUTER UNAVAILABLE*** **ALWAYS**	**ROUTER SPECIFIED**: The stateful auto-configuration method to be used by the print server is determined by a router. The router specifies whether the print server obtains its address, its configuration information, or both from a DHCPv6 server. **ROUTER UNAVAILABLE**: If a router is not available, the print server should attempt to obtain its stateful configuration from a DHCPv6 server. **ALWAYS**: Whether or not a router is available, the print server always attempts to obtain its stateful configuration from a DHCPv6 server.
		PRIMARY DNS		Use this item to specify an IPv6 address for a primary DNS server that the print server should use.
		SECONDARY DNS		Use this item to specify an IPv6 address for a secondary DNS server that the print server should use.

Table 3-13 **Embedded Jetdirect menu (continued)**

Item	Sub-item	Sub-item	Sub-item	Description
	PROXY SERVER			Specifies the proxy server to be used by embedded applications in the product. A proxy server is typically used by network clients for Internet access. It caches Web pages, and provides a degree of Internet security, for those clients. To specify a proxy server, enter its IPv4 address or fully-qualified domain name. The name can be up to 255 octets. For some networks, you might need to contact your Internet Service Provider (ISP) for the proxy server address.
	PROXY PORT			Type the port number used by the proxy server for client support. The port number identifies the port reserved for proxy activity on your network, and can be a value from 0 to 65535.
	IDLE TIMEOUT			**IDLE TIMEOUT**: The time period, in seconds, after which an idle TCP print data connection is closed (default is 270 seconds, 0 disables the timeout).
IPX/SPX	**ENABLE**		**ON***	**ON**: Enable the IPX/SPX protocol.
			OFF	**OFF**: Disable the IPX/SPX protocol.
	FRAME TYPE		**AUTO***	Selects the frame-type setting for your network.
			EN_8023	**AUTO**: Automatically sets and limits the frame type to the first one detected.
			EN_II	
			EN_8022	**EN_8023**, **EN_II**, **EN_8022**, and **EN_SNAP** are frame-type selections for Ethernet networks.
			EN_SNAP	
APPLETALK	**ENABLE**		**ON***	Configures an AppleTalk network.
			OFF	
DLC/LLC	**ENABLE**		**ON***	**ON**: Enable the DLC/LLC protocol.
			OFF	**OFF**: Disable the DLC/LLC protocol.
SECURITY	**SECURE WEB**		**HTTPS REQUIRED***	For configuration management, specify whether the embedded Web server will accept communications using HTTPS (Secure HTTP) only, or both HTTP and HTTPS.
			HTTPS OPTIONAL	**HTTPS REQUIRED**: For secure, encrypted communications, only HTTPS access is accepted. The print server will appear as a secure site. **HTTPS OPTIONAL**: Access using either HTTP or HTTPS is permitted.

Table 3-13 **Embedded Jetdirect menu (continued)**

Item	Sub-item	Sub-item	Sub-item	Description
	IPSEC		**KEEP** **DISABLE***	Specify the IPSec status on the print server. **KEEP**: IPSec status remains the same as currently configured. **DISABLE**: IPSec operation on the print server is disabled.
	802.1X		**RESET** **KEEP***	Specify whether the 802.1X settings on the print server are reset to the factory defaults. **RESET**: The 802.1X settings are reset to the factory defaults. **KEEP**: The current 802.1X settings are maintained.
	RESET SECURITY		**YES** **NO***	Specify whether the current security settings on the print server will be saved or reset to factory defaults. **YES**: Security settings are reset to factory defaults. **NO**: The current security settings are maintained.
DIAGNOSTICS	**EMBEDDED TESTS**			This menu provides tests to help diagnose network hardware or TCP/IP network connection problems. Embedded tests help to identify whether a network fault is internal or external to the product. Use an embedded test to check hardware and communication paths on the print server. After you select and enable a test and set the execution time, you must select **EXECUTE** to initiate the test. Depending on the execution time, a selected test runs continuously until either the product is turned off, or an error occurs and a diagnostic page is printed.
		LAN HW TEST	**YES** **NO***	**CAUTION:** Running this embedded test will erase your TCP/IP configuration. This test performs an internal loopback test. An internal loopback test will send and receive packets only on the internal network hardware. There are no external transmissions on your network. Select **YES** to choose this test, or **NO** to not choose it.
		HTTP TEST	**YES** **NO***	This test checks operation of HTTP by retrieving predefined pages from the product, and tests the embedded Web server. Select **YES** to choose this test, or **NO** to not choose it.

Table 3-13 **Embedded Jetdirect menu (continued)**

Item	Sub-item	Sub-item	Sub-item	Description
		SNMP TEST	**YES** **NO*** 	This test checks operation of SNMP communications by accessing predefined SNMP objects on the product. Select **YES** to choose this test, or **NO** to not choose it.
		DATA PATH TEST	**YES** **NO*** 	This test helps to identify data path and corruption problems on an HP postscript level 3 emulation product. It sends a predefined PS file to the product, However, the test is paperless; the file will not print. Select **YES** to choose this test, or **NO** to not choose it.
		SELECT ALL TESTS	**YES** **NO*** 	Use this item to select all available embedded tests. Select **YES** to choose all tests. Select **NO** to select individual tests.
		EXECUTION TIME [H]		Use this item to specify the length of time (in hours) that an embedded test will be run. You can select a value from 0 to 24 hours. If you select zero (0), the test runs indefinitely until an error occurs or the product is turned off. Data gathered from the HTTP, SNMP, and Data Path tests is printed after the tests have completed.
		EXECUTE	**YES** **NO*** 	**NO**: Do not initiate the selected tests. **YES**: Initiate the selected tests.
	PING TEST			This test is used to check network communications. This test sends link-level packets to a remote network host, then waits for an appropriate response. To run a ping test, set the following items:
		DEST TYPE	**IPV4** **IPV6** 	Specify whether the target product is an IPv4 or IPv6 node.
		DEST IPV4		Type the IPv4 address.
		DEST IPV6		Type the IPv6 address.
		PACKET SIZE		Specify the size of each packet, in bytes, to be sent to the remote host. The minimum is 64 (default) and the maximum is 2048.
		TIMEOUT		Specify the length of time, in seconds, to wait for a response from the remote host. The default is 1 and the maximum is 100.
		COUNT		Specify the number of ping test packets to send for this test. Select a value from 0 to 100. The default is 4. To configure the test to run continuously, select 0.

Table 3-13 **Embedded Jetdirect menu (continued)**

Item	Sub-item	Sub-item	Sub-item	Description
		PRINT RESULTS	**YES** **NO***	If the ping test was not set for continuous operation, you can choose to print the test results. Select **YES** to print results. If you select **NO**, results are not printed.
		EXECUTE	**YES** **NO***	Specify whether to initiate the ping test. Select **YES** to initiate the test, or **NO** to not run the test.
	PING RESULTS			Use this item to view the ping test status and results using the control panel display. You can select the following items:
		PACKETS SENT		Shows the number of packets (0 - 65535) sent to the remote host since the most recent test was initiated or completed. The default is 0.
		PACKETS RECEIVED		Shows the number of packets (0 - 65535) received from the remote host since the most recent test was initiated or completed. The default is 0.
		PERCENT LOST		Shows the percent (0 to 100) of ping test packets that were sent with no response from the remote host since the most recent test was initiated or completed. The default is 0.
		RTT MIN		Shows the minimum detected roundtrip-time (RTT), from 0 to 4096 milliseconds, for packet transmission and response. The default is 0.
		RTT MAX		Shows the maximum detected roundtrip-time (RTT), from 0 to 4096 milliseconds, for packet transmission and response. The default is 0.
		RTT AVERAGE		Shows the average round-trip-time (RTT), from 0 to 4096 milliseconds, for packet transmission and response. The default is 0.
		PING IN PROGRESS	**YES** **NO***	Shows whether a ping test is in progress. **YES** indicates a test in progress, and **NO** indicates that a test completed or was not run.

Table 3-13 Embedded Jetdirect menu (continued)

Item	Sub-item	Sub-item	Sub-item	Description
		REFRESH	**YES** **NO*** **NO***	When viewing the ping test results, this item updates the ping test data with current results. Select **YES** to update the data, or **NO** to maintain the existing data. However, a refresh automatically occurs when the menu times out or you manually return to the main menu.
LINK SPEED			**AUTO*** **10T HALF** **10T FULL** **100TX HALF** **100TX FULL** **100TX AUTO** **1000T FULL**	The link speed and communication mode of the print server must match the network. The available settings depend on the product and installed print server. Select one of the following link configuration settings: **CAUTION:** If you change the link setting, network communications with the print server and network product might be lost. **AUTO**: The print server uses auto-negotiation to configure itself with the highest link speed and communication mode allowed. If auto-negotiation fails, either **100TX HALF** or **10T HALF** is set depending on the detected link speed of the hub/switch port. (A 1000T half-duplex selection is not supported.) **10T HALF**: 10 Mbps, half-duplex operation. **10T FULL**: 10 Mbps, full-duplex operation. **100TX HALF**: 100 Mbps, half-duplex operation. **100TX FULL**: 100 Mbps, full-duplex operation. **100TX AUTO**: Limits auto-negotiation to a maximum link speed of 100 Mbps. **1000T FULL**: 1000 Mbps, full-duplex operation.

Resets menu

The **RESETS** menu allows you to reset factory settings, and disable or enable sleep mode.

To display: Press the Home button, select the **CONFIGURE DEVICE** menu, and then select the **RESETS** menu.

NOTE: Values that have an asterisk (*) are the factory-default values. Some menu items have no default.

Item	Sub-item	Values	Description
RESTORE FACTORY SETTINGS			Allows you to clear the page buffer, remove all perishable personality data, reset the printing environment, and return most settings to factory defaults.
CALIBRATION RESET			Resets calibration values on the formatter.
SLEEP MODE		**OFF** **ON***	If **SLEEP MODE** is **OFF**, the product will never enter power save mode and no asterisk will appear next to any item when the user enters the menu item **SLEEP DELAY**.

Diagnostics menu

The **DIAGNOSTICS** menu allows you to run tests that can help you identify and solve problems with the product.

To display: Press the Home button, and then select the **DIAGNOSTICS** menu.

NOTE: Values that have an asterisk (*) are the factory-default values. Some menu items have no default.

Item	Sub-item	Values	Description
PRINT EVENT LOG			Prints a report containing the last 50 entries in the product's event log, starting with the most recent.
SHOW EVENT LOG			Displays the last 50 events, starting with the most recent.
PQ TROUBLESHOOTING			Prints a page that includes instructions, pages for each color, a demo page, and a configuration page. These pages can help isolate print-quality problems.
PRINT DIAGNOSTICS PAGE			Prints a page that can assist in diagnosing product problems.
DISABLE CARTRIDGE CHECK			This item allows you to remove a print cartridge to help determine which cartridge is the source of a problem.

Item	Sub-item	Values	Description
PAPER PATH SENSORS			Performs a test on each of the product's sensors to determine if they are working correctly and displays the status of each sensor.
PAPER PATH TEST			Tests the paper-handling features of the product, such as the configuration of the trays.
	PRINT TEST PAGE		Generates a page for testing the paper-handling features. You must define the path for the test in order to test specific paper paths.
	SOURCE	**ALL TRAYS** **TRAY 1** **TRAY 2*** **TRAY 3** **TRAY 4** **TRAY 5**	Specifies whether the test page is printed from all trays or from a specific tray.
	DUPLEX	**OFF** **ON**	Determines whether the duplexer is included in the test. **NOTE:** This option is available only for models that have an automatic duplexer.
	COPIES	**1*** **10** **50** **100** **500**	Determines how many pages should be sent from the specified source as part of the test.
MANUAL SENSOR TEST			Performs tests to determine whether the paper path sensors are operating correctly.
MANUAL SENSOR TEST 2			Performs additional tests to determine whether the paper path sensors are operating correctly.
COMPONENT TEST	A list of available components appears.		Activate individual parts independently to isolate noise, leaking, and other hardware issues.
PRINT/STOP TEST		Range is 0 - 60,000 milliseconds. The default is 0.	Isolates print quality faults more accurately by stopping the product in mid-print cycle, which allows you to see where the image begins to degrade. This causes a jam message that might need to be manually cleared. A service representative should perform this test.

Item	Sub-item	Values	Description
COLOR BAND TEST	**PRINT TEST PAGE**		Prints a color band test page that is used to identify arcing in the high-voltage power supply.
	COPIES	Range is 1 to 30. The default value is 1.	Specify how many copies of the internal page are printed.

Service menu

The **SERVICE** menu is locked and requires a PIN for access. This menu is intended for use by authorized service personnel. See Service mode functions on page 420.

Product PINs

- HP Color LaserJet CP4025: 11402509
- HP Color LaserJet CP4525: 11452509

Interpret control-panel messages

Control-panel message types

Four types of control-panel messages can indicate the status of or problems with the product.

Message type	Description
Status messages	Status messages reflect the current state of the product. They inform you of normal product operation and require no interaction to clear them. They change as the state of the product changes. Whenever the product is ready, not busy, and has no pending warning messages, the status message **Ready** appears if the product is online.
Warning messages	Warning messages inform you of data and print errors. These messages typically alternate with the **Ready** or status messages and remain until OK is pressed. Some warning messages are clearable. If **CLEARABLE WARNINGS** is set to **JOB** on the product **CONFIGURE DEVICE** menu, the next print job clears these messages.
Error messages	Error messages communicate that some action must be performed, such as adding paper or clearing a jam. Some error messages are auto-continuable. If **AUTO-CONTINUE** is set on the menus, the product will continue normal operation after an auto-continuable error message appears for 10 seconds. NOTE: Pressing any button during the 10-second auto-continuable error message overrides the auto-continue feature, and the button function takes precedence. For example, pressing the stop button ⊗ pauses printing and offers the option to cancel the print job.
Critical-error messages	Critical error messages inform you of a product failure. Some of these messages can be cleared by turning the product off and then on. These messages are not affected by the **AUTO-CONTINUE** setting. If a critical error persists, service is required.

Control-panel messages

Table 3-14 **Control-panel messages**

Description	Recommended action	
10.41.00 UNSUPPORTED SUPPLY IN USE	An unsupported supply is installed.	If you believe you purchased a genuine HP supply, go to www.hp.com/go/anticounterfeit.
10.XX.YY SUPPLY MEMORY ERROR	The product cannot read or write to at least one print cartridge memory tag or a memory tag is missing from a print cartridge. **XX values** • 00 = Memory tag memory error • 10 = Memory tag missing **YY values** • 00 = Black • 01 = Cyan • 02 = Magenta • 03 = Yellow	Reinstall the print cartridge, or install a new print cartridge.

Table 3-14 Control-panel messages (continued)

Description	Recommended action	
11.XX Internal clock error **To continue press OK**	The product real-time clock has experienced an error. • XX = 01; clock battery failed • XX = 02; real time clock failed	Whenever the product is turned off and then turned on again, set the time and date at the control panel. See System setup menu on page 329. If the error persists, you might need to replace the formatter.
13.XX.YY FUSER AREA JAM	A jam has occurred in the fuser area.	**CAUTION:** The fuser can be hot while the product is in use. Wait for the fuser to cool before handling it. For instructions on clearing the jam, see Clear jams in the right door on page 387.
13.XX.YY FUSER WRAP JAM	A jam has occurred in the fuser.	**CAUTION:** The fuser can be hot while the product is in use. Wait for the fuser to cool before handling it. For instructions on clearing the jam, see Clear jams in the right door on page 387.
13.XX.YY JAM ABOVE TOP OUTPUT BIN	A jam has occurred in the output area.	For instructions on clearing the jam, see Clear jams in the output bin area on page 390.
13.XX.YY JAM IN LOWER RIGHT DOOR	A jam has occurred in the lower-right door (Tray 3).	For instructions on clearing the jam, see Clear jams in the lower right door (Tray 3, 4, or 5) on page 393.
13.XX.YY JAM IN RIGHT DOOR	A jam has occurred in the duplex and feed area inside the right door.	For instructions on clearing the jam, see Clear jams in the right door on page 387.
13.XX.YY JAM IN TOP OUTPUT BIN	A jam has occurred in the top output bin.	For instructions on clearing the jam, see Clear jams in the output bin area on page 390.
13.XX.YY JAM IN TRAY 1	A jam has occurred in Tray 1.	For instructions on clearing the jam, see Clear jams in Tray 1 on page 390.
13.XX.YY JAM IN TRAY <X>	A jam has occurred in the indicated tray.	For instructions on clearing the jam, see Clear jams in Tray 2 or optional Trays 3, 4, or 5 on page 392.
13.XX.YY JAMS IN RIGHT DOOR	A jam has occurred in the fuser area.	**CAUTION:** The fuser can be hot while the product is in use. Wait for the fuser to cool before handling it. For instructions on clearing the jam, see Clear jams in the right door on page 387.
20 INSUFFICIENT MEMORY **To continue press OK**	The product received more data than can fit in the available memory. You might have tried to transfer too many macros, soft fonts, or complex graphics.	Press the OK button to print the transferred data (some data might be lost), and then simplify the print job or install additional memory.
21.X INSUFFICIENT MEMORY TO LOAD FONTS/DATA	Insufficient memory to process the print job.	Install additional memory in the product.
22 EIO X BUFFER OVERFLOW **To continue press OK**	Too much data was sent to the EIO card in the specified slot (x). An incorrect communications protocol might be in use.	Press the OK button to print the transferred data. (Some data might be lost.) Check the host configuration.

Table 3-14 Control-panel messages (continued)

Description	Recommended action	
22 EMBEDDED I/O BUFFER OVERFLOW **To continue press OK**	Too much data was sent to the embedded HP Jetdirect print server.	Press the OK button to print the transferred data. (Some data might be lost.) Check the host configuration.
22 PARALLEL I/O BUFFER OVERFLOW **To continue press OK**	The product's parallel buffer has overflowed.	Press the OK button to print the transferred data. (Some data might be lost.) Check the host configuration.
22 PARALLEL SERIAL BUFFER OVERFLOW **To continue press OK**	The product's serial buffer has overflowed.	Press the OK button to print the transferred data. (Some data might be lost.) Check the host configuration.
22 USB I/O BUFFER OVERFLOW **To continue press OK**	The product's USB buffer has overflowed.	Press the OK button to print the transferred data. (Some data might be lost.) Check the host configuration.
40 EIO X BAD TRANSMISSION **To continue press OK**	The connection between the product and the EIO card in the specified slot has been broken.	Press the OK button to clear the error message and continue printing. Try to reinstall the EIO card.
40 EMBEDDED I/O BAD TRANSMISSION **To continue press OK**	A temporary printing error has occurred.	Press the OK button to clear the error message. (Data will be lost.)
41.3 UNEXPECTED SIZE IN TRAY <X> **LOAD TRAY <X> [TYPE] [SIZE]** **To use another tray press OK**	This message appears even though the tray is loaded with the correct paper size.	1. Run the sensor test in the sensor monitor mode to verify that the cassette media size switch is functioning properly. 2. Reconnect the cassette media size switch intermediate connector J57, and connector J107 on the DC controller PCA. 3. Replace the lifter assembly.
41.5 UNEXPECTED TYPE IN TRAY <X> **LOAD TRAY <X> [TYPE] [SIZE]** **To use another tray press OK**	This message appears even though the tray is loaded with the correct paper size.	1. Reconnect the media sensor intermediate connector J77, and connector J131 on the DC controller PCA. 2. Replace the registration assembly.
41.7 ERROR **To continue press OK**	Printer error • X = 2; beam detected misprint • X = 7; media transport error	Turn the product off, and then on.
48.01 TRANSFER UNIT ERROR	The transfer belt has dislocated during printing.	Turn product off then on. If the message persists, remove and reinstall the transfer unit.

Table 3-14 Control-panel messages (continued)

Description	Recommended action	
49.XXXX ERROR **To continue turn off then on**	A firmware error has occurred.	This error can be caused by corrupted print jobs, software applications issues, non-product specific printer drivers, poor-quality USB or network cables, bad network connections or incorrect configurations, invalid firmware operations, or unsupported accessories. 1. Turn the product off and then on. 2. If the error returns, check the following items: ◦ The error might be caused by a network connectivity problem, such as a bad interface cable, a bad USB port, or an invalid network configuration setting. ◦ The error might be caused by the print job, such as an invalid printer driver, a problem with the software application, or a problem with the file you are printing. ◦ Upgrading the product firmware might help resolve the error. See the product user guide for more information.
50.1 FUSER ERROR	Low fuser temperature.	Remove the fuser and any residual paper. Check connector J50 between the fuser and the product. If either is damaged, replace the connector or fuser. See Fuser on page 85.
50.2 FUSER ERROR	Fuser warm-up failure	1. Reinstall the fuser. 2. Check the connector J50 between the fuser and the product. If either is damaged, replace the connector or fuser. See Fuser on page 85. 3. Reconnect the connectors J160 and J162 on the DC controller PCA and connector J25 on the power line between the low voltage power supply and fuser. 4. Replace the wire harness that connects the fuser. 5. Replace the fuser. See Fuser on page 85. 6. If the error persists, replace the low-voltage power supply. See Low-voltage power supply (LVPS) on page 157.

Table 3-14 Control-panel messages (continued)

Description	Recommended action	
50.3 FUSER ERROR	High fuser temperature	Reinstall the fuser. Check connector J50 between the fuser and the product. If either is damaged, replace the connector or fuser. See Fuser on page 85. If the error persists, replace the low-voltage power supply. See Low-voltage power supply (LVPS) on page 157.
50.4 FUSER ERROR	Drive circuit fault	1. Check the power source. Make sure the power source meets product requirements. 2. Reconnect the connector J150 on the DC controller PCA. 3. If the message persists, replace the low-voltage power supply. See Low-voltage power supply (LVPS) on page 157.
50.5 FUSER ERROR	The incorrect fuser was installed.	**CAUTION:** The fuser can be hot while the product is in use. Wait for the fuser to cool before handling it. 1. Open the right door. 2. Remove the incompatible fuser. 3. Install the correct fuser. 4. Close the right door.
50.7 FUSER ERROR	Fuser pressure-release mechanism failure	1. Reconnect the fuser-pressure release sensor intermediate connector J60, and connector J128 on the DC controller PCA. 2. Run the sensor test in the sensor monitor mode to verify that the fuser pressure-release sensor is functioning properly. If it is not, replace the fuser pressure-release sensor. 3. Check the fuser pressure-release sensor flag. If it is damaged, replace the fuser. 4. Run the fuser pressure-release drive test in actuator drive mode to verify that the fuser motor is functioning properly. If it is not, replace the fuser motor. See Fuser motor on page 200. 5. If the message persists, replace the fuser. See Fuser on page 85.
50.8 FUSER ERROR	Low fuser temperature.	Remove the fuser and any residual paper. Check connector J50 between the fuser and the product. If either is damaged, replace the connector or fuser. See Fuser on page 85.

Table 3-14 Control-panel messages (continued)

Description	Recommended action	
50.9 FUSER ERROR	High fuser temperature.	Reinstall the fuser. Check the connector J50 between the fuser and the product. If either is damaged, replace the connector or fuser. See Fuser on page 85. If the error persists, replace the low-voltage power supply. See Low-voltage power supply (LVPS) on page 157.
50.X FUSER ERROR	A fuser error has occurred.	Make sure you have the correct fuser. Re-seat the fuser. Turn the product off, and then turn the product on.
51.XY ERROR **To continue turn off then on**	A product error has occurred. • 51.20 ERROR: black laser error • 51.21 ERROR: cyan laser error • 51.22 ERROR: magenta laser error • 51.23 ERROR: yellow laser error	Turn the product off, and then turn the product on.
52.XY ERROR **To continue turn off then on**	A product error has occurred. • 52.00 ERROR: Scanner startup error • 52.20 ERROR: Scanner rotation error	• **52.00 ERROR:** If the laser/scanner assembly (Y/M) does not start up, reconnect connector J71 on the laser driver PCA and connector J112 on the DC controller PCA. If the laser/scanner assembly (C/Bk) does not start up, reconnect connector J72 on the laser driver PCA and connector J112 on the DC controller PCA. If the message persists, replace the appropriate laser/scanner assembly. See Laser/scanner assembly (Y/M) on page 186 or Laser/scanner assembly (C/Bk) on page 190. • **52.20 ERROR:** If the laser/scanner assembly (Y/M) does not rotate, reconnect connector J71 on the laser driver PCA and connector J112 on the DC controller PCA. If the laser/scanner assembly (C/Bk) does not rotate, reconnect connector J72 on the laser driver PCA and connector J112 on the DC controller PCA. If the message persists, replace the appropriate laser/scanner assembly. See Laser/scanner assembly (Y/M) on page 186 or Laser/scanner assembly (C/Bk) on page 190.
54.XX ERROR **To continue turn off then on**	Error requires that the product be turned off then on.	Turn the product off, and then turn the product on.
55.XX.YY DC CONTROLLER ERROR **To continue turn off then on**	The print engine is not communicating with the formatter (XX = 01; DC controller memory error).	Turn the product off, and then turn the product on. If the error persists, replace the DC controller PCA. See DC controller PCA only on page 155.

Table 3-14 Control-panel messages (continued)

Description	Recommended action	
56.X ERROR **To continue turn off then on**	A temporary printing error has occurred (XX = 01; illegal input).	Turn the product off, and then turn the product on.
57.03 ERROR **To continue turn off then on**	Cartridge fan (FM2) is defective.	1. Reconnect the cartridge fan connector J65, connector J263 on the high-voltage power supply lower, and connector J114 on the DC controller PCA. 2. Turn the product off, and then on. Measure the voltage between connectors J263-16 and J263-18 on the high-voltage power supply lower immediately after the product is turned on. If the voltage changes from 0 V to approximately 24 V, replace the cartridge fan. See Cartridge fan and environmental sensor on page 137.
57.04 ERROR **To continue turn off then on**	Power-supply fan (FM1) is defective.	1. Reconnect the cartridge fan connector J153 on the DC controller PCA. 2. Turn the product off, and then on. Measure the voltage between connectors J153-1 and J153-3 on DC controller PCA immediately after the product is turned on. If the voltage changes from 0 V to approximately 24 V, replace the power-supply fan. See Power-supply fan on page 152.
57.06 ERROR **To continue turn off then on**	Exhaust fan (FM4) is defective.	1. Reconnect the cartridge fan connector J79, connector J264 on the high-voltage power supply lower, and connector J114 on the DC controller PCA. 2. Turn the product off, and then on. Measure the voltage between connectors J264-1 and J264-3 on the high-voltage power supply lower immediately after the product is turned on. If the voltage changes from 0 V to approximately 24 V, replace the exhuast fan. See Exhaust fan and fan duct on page 169.
57.XX ERROR **To continue turn off then on**	A temporary printing error has occurred.	Turn the product off, and then turn the product on.
58.XX ERROR **To continue turn off then on**	A temporary printing error has occurred. • 58.03 ERROR: DC controller PCA is defective. • 58.04 ERROR: Low-voltage power supply is defective.	• 58.03 ERROR: Turn the product off, and then turn the product on. If the message persists, replace the DC controller PCA. See DC controller PCA and tray on page 161. • 58.04 ERROR: Reconnect the connector J150 on the DC controller PCA. If the message persists, replace the low-voltage power supply. See Low-voltage power supply (LVPS) on page 157.

Table 3-14 Control-panel messages (continued)

Description	Recommended action	
59.20 ERROR	Motor rotation error.	Perform the motor component tests in the **DIAGNOSTICS** menu.
59.30 ERROR	Fuser motor startup error	Reconnect the connector J13 of the fuser motor and the connector J123 on the DC controller PCA. Perform the fuser motor component test in the **DIAGNOSTICS** menu. If the message persists, replace the fuser motor. See Fuser motor on page 200.
59.40 ERROR	Fuser motor rotation error	Perform the fuser motor component test in the **DIAGNOSTICS** menu. If the message persists, replace the fuser motor. See Fuser motor on page 200.
59.50 ERROR	Black image drum motor startup error	Reconnect the connector J15 of the black drum motor and the connector J121 on the DC controller PCA. Perform the drum-motors component test in the **DIAGNOSTICS** menu. If the message persists, replace the black drum motor. See Yellow, magenta, cyan, and black drum motors on page 199.
59.51 ERROR	Cyan image drum motor startup error	Reconnect the connector J16 of the cyan drum motor and the connector J121 on the DC controller PCA. Perform the drum-motors component test in the **DIAGNOSTICS** menu. If the message persists, replace the cyan drum motor. See Yellow, magenta, cyan, and black drum motors on page 199.
59.52 ERROR	Magenta image drum motor startup error	Reconnect the connector J17 of the magenta drum motor and the connector J120 on the DC controller PCA. Perform the drum-motors component test in the **DIAGNOSTICS** menu. If the message persists, replace the magenta drum motor. See Yellow, magenta, cyan, and black drum motors on page 199.
59.53 ERROR	Yellow image drum motor startup error	Reconnect the connector J18 of the yellow drum motor and the connector J120 on the DC controller PCA. Perform the drum-motors component test in the **DIAGNOSTICS** menu. If the message persists, replace the yellow drum motor. See Yellow, magenta, cyan, and black drum motors on page 199.
59.60 ERROR	Black image drum motor rotation error	Perform the drum-motors component test in the **DIAGNOSTICS** menu. If the message persists, replace the black drum motor. See Yellow, magenta, cyan, and black drum motors on page 199.
59.61 ERROR	Cyan image drum motor rotation error	Perform the drum-motors component test in the **DIAGNOSTICS** menu. If the message persists, replace the cyan drum motor. See Yellow, magenta, cyan, and black drum motors on page 199.
59.62 ERROR	Magenta image drum motor rotation error	Perform the drum-motors component test in the **DIAGNOSTICS** menu. If the message persists, replace the magenta drum motor. See Yellow, magenta, cyan, and black drum motors on page 199.

Table 3-14 Control-panel messages (continued)

Description	Recommended action	
59.63 ERROR	Yellow image drum motor rotation error	Perform the drum-motors component test in the **DIAGNOSTICS** menu. If the message persists, replace the yellow drum motor. See Yellow, magenta, cyan, and black drum motors on page 199.
59.90 ERROR	ITB motor startup error	Reconnect the connector J14 of the ITB motor and the connector J140 on the DC controller PCA. Perform the ITB motor drive component test to verify that the ITB motor is functioning properly. If the message persists, replace the ITB motor. See ITB motor on page 202.
59.A0 ERROR	ITB motor rotation error.	Use the component test to activate the ITB motor. If the motor does not function, replace the motor. See ITB motor on page 202.
59.BO CLEANING MOTOR ERROR **REPLACE TONER COLLECTION UNIT**	The residual-toner feed motor has failed.	1. Check the toner collection unit. If the unit is full, replace it. **NOTE:** Toner can clog the feed motor if the toner collection unit is full. 2. Reconnect the residual-toner feed motor connector J63 and connector J155 on the DC controller PCA. 3. Replace the residual-toner feed motor. See Residual-toner-feed motor on page 133.
59.C0 ERROR	Developer alienation motor rotation error	1. Reconnect intermediate connector J87 of the developing disengagement sensor, connector J112 on the DC controller PCA, connector J38 of the developing disengagement motor, and the connector J261 on the high-voltage power supply D PCA. 2. Run the sensor test in the sensor monitor mode to verify that the developing disengagement sensor is functioning properly. If it is not, replace the main-drive assembly. See Main-drive assembly on page 203. 3. Run the developing unit disengagement drive test to verify that the disengagement mechanism is functioning properly. If it is not, replace the developing disengagement motor. See Developing-disengagement motor on page 168.

Table 3-14 Control-panel messages (continued)

Description	Recommended action	
59.F0 ERROR	Transfer alienation failure	1. Verify that the ITB is installed. 2. Reconnect the primary-transfer disengagement sensor J19, and connector J128 on the DC controller PCA . 3. Run the sensor test in the sensor monitor mode to verify that the primary transfer disengagement sensor is functioning properly. If not, replace the primary transfer disengagement sensor. 4. Perform the alienation drive component test in the **DIAGNOSTICS** menu. If not, replace the fuser motor. See Fuser motor on page 200.
60.02 ERROR	Tray 2 is not lifting correctly.	1. Reconnect connector J115 on the DC controller PCA and the intermediate connector J58. 2. Run the sensor test in sensor monitor mode to verify that the cassette media stack surface sensor is functioning properly. If it is not, replace the pickup assembly. See Tray-pickup drive assembly on page 178. 3. Reconnect connector J56 of the lifter motor. Also check J107 on the DC controller PCA. 4. If the message persists, replace the lifter drive assembly. See Lifter-drive assembly on page 173.
60.03 ERROR	Tray 3 is not lifting correctly.	1. Reconnect connector J408 on the paper deck controller PCA and the intermediate connector J11. 2. Run the sensor test in sensor monitor mode to verify that the cassette media stack surface sensor is functioning properly. If it is not, replace the pickup assembly. See Pickup assembly (optional paper feeder) on page 226. 3. Reconnect connector J15 of the lifter motor. Also check J407 on the paper deck controller PCA. 4. If the message persists, replace the lifter drive assembly. See Lifter-drive assembly (optional paper feeder) on page 230.

Table 3-14 Control-panel messages (continued)

Description	Recommended action	
60.04 ERROR	Tray 4 is not lifting correctly.	1. Reconnect connector J406 on the paper deck controller PCA and the intermediate connector J21. 2. Run the sensor test in sensor monitor mode to verify that the cassette media stack surface sensor is functioning properly. If it is not, replace the pickup assembly. See Pickup assembly (optional paper feeder) on page 226. 3. Reconnect connector J24 of the lifter motor. Also check J405 on the paper deck controller PCA. 4. If the message persists, replace the lifter drive assembly. See Lifter-drive assembly (optional paper feeder) on page 230.
60.05 ERROR	Tray 5 is not lifting correctly.	1. Reconnect the connector J403 on the paper deck controller PCA and the intermediate connector J31. 2. Run the sensor test in the sensor monitor mode to verify that the PD cassette media stack surface sensor is functioning properly. If it is not, replace the middle pickup assembly. See Pickup assembly (optional paper feeder) on page 226. 3. Reconnect the connector J34 of the lifter motor and the connector. Also check J402 on the paper deck controller PCA. 4. If the message persists, replace the lifter drive assembly. See Lifter-drive assembly (optional paper feeder) on page 230.
62 NO SYSTEM **To continue turn off then on**	The product has an internal problem.	Turn the product off and then on.
68.X PERMANENT STORAGE FULL **To continue press OK**	The product NVRAM is full. Some settings saved in the NVRAM might have been reset to the factory defaults. Printing can continue, but some unexpected functions might occur if an error occurred in permanent storage. **X values** • 0 = Internal memory • 1 = Removable disk	Press the OK button to clear the message. If the message is not cleared, turn the product off, and then turn the product on.

Table 3-14 Control-panel messages (continued)

Description	Recommended action	
68.X PERMANENT STORAGE WRITE FAIL **To continue press OK**	The product NVRAM is failing to write. Printing can continue, but some unexpected functions might occur if an error occurred in permanent storage. **X values** • 0 = Internal memory • 1 = Removable disk	Press the OK button to clear the message. If the message is not cleared, turn the product off, and then turn the product on.
68.X STORAGE ERROR SETTINGS CHANGED **To continue press OK**	One or more product settings are invalid and have been reset to the factory-default settings. Printing can continue, but some unexpected functions might occur if an error occurred in permanent storage.	Press the OK button to clear the message. If the message is not cleared, turn the product off, and then turn the product on.
69.X ERROR **To continue turn off then on**	A temporary printing error occurred.	Turn the product off, and then turn the product on.
79.XXXX ERROR **To continue turn off then on**	An internal product error has occurred.	Turn the product off and then on.
8X.YYYY EIO ERROR	This message appears in English only. It indicates that the EIO card in slot X has failed.	Replace the EIO card.
8X.YYYY EMBEDDED JETDIRECT ERROR	This message appears in English only. It indicates that the embedded HP Jetdirect card has failed.	
<COLOR> CARTRIDGE VERY LOW **To continue press OK**	The product indicates when a supply level is low. Actual print cartridge life might vary. You do not need to replace the print cartridge at this time unless print quality is no longer acceptable.	Order the indicated print cartridge.
ACCEPT BAD SIGNATURE? **Yes press OK** alternates with **ACCEPT BAD SIGNATURE?** **No press ⊗**	The product is performing a remote firmware upgrade, and the code signature is invalid.	Download the correct firmware upgrade file for this product, and then reinstall the upgrade. See the product user guide for more information.
Access denied MENUS LOCKED	The control-panel menu that you tried to select is currently locked.	Consult with the person who administers the product.
Action not currently available for tray x Tray size cannot be ANY SIZE/ANY CUSTOM	Duplex registration is not available when the size is set to **ANY SIZE** or **ANY CUSTOM**.	Configure the tray to a specific size, and then set the registration for that tray.
BAD OPTIONAL TRAY CONNECTION	The optional tray is not connected correctly.	1. Turn the product off. 2. Remove and then reinstall the optional tray. 3. Reconnect the connectors for the tray. 4. If the problem persist, replace the connector for tray.

Table 3-14 Control-panel messages (continued)

Description	Recommended action	
Bad Signature **Upgrade cancelled**	The firmware upgrade code does not match the product signature.	Download the correct firmware upgrade file for this product, and then reinstall the upgrade. See the product user guide for more information.
BLACK CARTRIDGE LOW	The product indicates when a supply level is low. Actual print cartridge life might vary. You do not need to replace the print cartridge at this time unless print quality is no longer acceptable.	If print quality is no longer acceptable, replace the print cartridge. Consider purchasing a replacement cartridge so it is available when the installed cartridge has reached the end of its estimated life. See Print cartridges on page 74.
BLACK CARTRIDGE LOW **LESS THAN XXXX PAGES**	The product indicates when a supply level is low. Actual print cartridge life might vary. You do not need to replace the print cartridge at this time unless print quality is no longer acceptable. Estimated pages remaining is based upon the historical page coverage of this product.	If print quality is no longer acceptable, replace the print cartridge. Consider purchasing a replacement cartridge so it is available when the installed cartridge has reached the end of its estimated life. See Print cartridges on page 74.
BLACK CARTRIDGE VERY LOW	The product indicates when a supply level is very low. Actual print cartridge life might vary. You do not need to replace the print cartridge at this time unless print quality is no longer acceptable. After an HP supply has reached the very low threshold, the HP premium protection warranty for that supply has ended.	If print quality is no longer acceptable, replace the print cartridge. Consider purchasing a replacement cartridge so it is available when the installed cartridge has reached the end of its estimated life. See Print cartridges on page 74.
BLACK CARTRIDGE VERY LOW **PRINTING BLACK ONLY**	The product indicates when a supply level is very low. The product has been configured to print using only black when the level of a color supply is very low. The actual print cartridge life might vary. You do not need to replace the cartridge at this time unless print quality is no longer acceptable. After an HP supply has reached the very low threshold, the HP premium protection warranty for that supply has ended.	To stop printing black only, change the **AT VERY LOW** menu item for Color Cartridges to a setting other than **PRINT IN BLACK** or replace the very low color cartridges. Consider purchasing replacement cartridges so they are available when the installed cartridges have reached the end of their estimated lives. See Print cartridges on page 74.
BLACK CARTRIDGE VERY LOW **To continue press OK**	The product indicates when a supply level is very low. Actual print cartridge life might vary. Consider having a replacement print cartridge available to install when print quality is no longer acceptable. You do not need to replace the print cartridge at this time unless print quality is no longer acceptable. After an HP supply has reached the very low threshold, the HP premium protection warranty for that supply has ended.	Press the OK button to continue. If print quality is no longer acceptable, replace the print cartridge. Consider purchasing a replacement cartridge so it is available when the installed cartridge is empty. See Print cartridges on page 74.
Calibrating...	Displays during calibration.	No action is necessary.
CALIBRATION RESET PENDING **Processing...**	A calibration reset will occur when all jobs are processed.	To begin the reset sooner, cancel all jobs by pressing the Stop button ⊗.
Canceling...	The product is canceling the current job.	No action is necessary.
CARD SLOT <X> NOT FUNCTIONAL	The compact flash card in slot <X> is not working correctly.	Remove the card from the slot indicated, and replace with a new card.

Table 3-14 Control-panel messages (continued)

Description	Recommended action	
CARD SLOT DEVICE FAILURE **To clear press OK**	The specified device has failed.	Press the OK button to clear.
CARD SLOT FILE OPERATION FAILED **To clear press OK**	A PJL file system command attempted to perform an illogical operation.	Press the OK button to clear.
CARD SLOT FILE SYSTEM IS FULL **To clear press OK**	A PJL file system command could not store something on the file system because the file system was full.	Press the OK button to clear.
CARD SLOT IS WRITE PROTECTED **To clear press OK**	The file system device is protected and no new files can be written to it.	Press the OK button to clear.
CARD SLOT NOT INITIALIZED	This file-storage component must be initialized before use.	Use the embedded Web server or HP Web Jetadmin to initialize the component.
CHECKING PAPER PATH	The product is checking for possible paper jams.	No action is necessary.
CHECKING PRINTER	The product is conducting an internal test.	No action is necessary.
CHOSEN PERSONALITY NOT AVAILABLE **To continue press OK**	A print job requested a product language (personality) that is not available for this product. The job will not print and will be cleared from memory.	Print the job by using a printer driver for a different printer language, or add the requested language to the product (if possible). To see a list of available personalities, print a configuration page. (See Configuration page on page 307.)
CLEANING DISK <X>% COMPLETE **Do not power off**	The product is cleaning the hard disk or a compact flash disk.	Do not turn off. The product will automatically restart when cleaning is complete. Product functions are unavailable.
CLEANING...	The product is performing an automatic cleaning cycle. Printing will continue after the cleaning is complete.	No action is necessary.
CLEARING EVENT LOG	This message is displayed while the event log is cleared. The product will exit the menus once the event log has been cleared.	No action is necessary.
CLEARING PAPER PATH	The product is attempting to eject jammed paper.	Check progress at the bottom of the display.
CLOSE FRONT DOOR	The front door of the product is open.	1. Close the door. 2. Run the switch test in the sensor monitor mode to verify that the front-door switch is functioning properly. 3. Reconnect connector J45 on the front door switch and connector J129 on the DC controller PCA. 4. Check the sensor flag on the front-door assembly. If it is damaged, replace the front-door assembly. See Front-door assembly on page 107.

Table 3-14 Control-panel messages (continued)

Description	Recommended action	
CLOSE LOWER RIGHT DOOR	**3 x 500 optional paper feeder only** The right door on the optional paper feeder is open.	Close the door. **If the message appears when the door is closed:** 1. Reconnect connector J19 of the PD right door switch and connector J147 on the controller PCA. 2. Check the right door sensor flag. If it is damaged, replace the right-door assembly. See Right door (optional paper feeder) on page 220.
CLOSE RIGHT DOOR	A door on the right side of the product is open.	1. Close the door. 2. Run the switch test in the sensor monitor mode to verify that the right-door switch is functioning properly. 3. Reconnect connectors J43 of the right-door switch and connector J147 on the DC controller PCA. 4. If the message persists, check the right door sensor flag. If it is damaged, replace the right door. See Right-door assembly on page 113.
COLLECTION UNIT ALMOST FULL	The toner collection unit is almost full. The actual supply life remaining might vary. You do not need to replace the toner collection unit at this time unless print quality is no longer acceptable.	To continue printing, either press the OK button or replace the toner collection unit. See Toner-collection unit on page 76.
Cooling engine	The product is cooling.	No action is necessary.
Creating... **CLEANING PAGE**	A cleaning page is being generated.	No action is necessary.
CYAN CARTRIDGE LOW	The product indicates when a supply level is low. Actual print cartridge life might vary. You do not need to replace the print cartridge at this time unless print quality is no longer acceptable.	If print quality is no longer acceptable, replace the print cartridge. Consider purchasing a replacement cartridge so it is available when the installed cartridge has reached the end of its estimated life. See Print cartridges on page 74.
CYAN CARTRIDGE LOW **LESS THAN XXXX PAGES**	The product indicates when a supply level is low. Actual print cartridge life might vary. You do not need to replace the print cartridge at this time unless print quality is no longer acceptable. Estimated pages remaining is based upon the historical page coverage of this product.	If print quality is no longer acceptable, replace the print cartridge. Consider purchasing a replacement cartridge so it is available when the installed cartridge has reached the end of its estimated life. See Print cartridges on page 74.

Table 3-14 Control-panel messages (continued)

Description	Recommended action	
CYAN CARTRIDGE VERY LOW	The product indicates when a supply level is very low. Actual print cartridge life might vary. Consider having a replacement print cartridge available to install when print quality is no longer acceptable. You do not need to replace the print cartridge at this time unless print quality is no longer acceptable. After an HP supply has reached the very low threshold, the HP premium protection warranty for that supply has ended.	If print quality is no longer acceptable, replace the print cartridge. See Print cartridges on page 74.
CYAN CARTRIDGE VERY LOW **To continue press OK**	The product indicates when a supply level is very low. Actual print cartridge life might vary. Consider having a replacement print cartridge available to install when print quality is no longer acceptable. You do not need to replace the print cartridge at this time unless print quality is no longer acceptable. After an HP supply has reached the very low threshold, the HP premium protection warranty for that supply has ended.	Press the OK button to continue. If print quality is no longer acceptable, replace the print cartridge. See Print cartridges on page 74.
DATA RECEIVED **To print last page press OK**	The product is waiting for the command to print the last page.	Press the OK button to print the last page.
DATE/TIME = YYYY/MMMM/DD HH:MM **To change press OK** **To skip press ⊗**	The current date and time set for the product.	Press the OK button to set the date and time or press the stop button ⊗ to skip setup.
Deleting private jobs	The product is deleting a private stored job.	No action is necessary.
Deleting...	The product is currently deleting the stored job.	No action is necessary.
EIO <X> DISK INITIALIZING	The specified EIO disk device is initializing.	No action is necessary.
EIO <X> DISK NOT FUNCTIONAL	The EIO disk in slot <X> is not working correctly.	1. Turn the product off. 2. Remove the disk from the slot indicated. 3. Replace with a new disk. 4. Turn the product on.
EIO <X> DISK SPINNING UP	EIO disk device in slot <X> is spinning up its platter. Jobs that require disk access must wait.	No action is necessary.
EIO DEVICE FAILURE **To clear press OK**	The specified device has failed.	Press the OK button to clear.
EIO FILE OPERATION FAILED **To clear press OK**	A PJL file system command attempted to perform an illogical operation.	Press the OK button to clear.
EIO FILE SYSTEM IS FULL **To clear press OK**	A PJL file system command could not store something on the file system because the file system was full.	Press the OK button to clear.

Table 3-14 Control-panel messages (continued)

Description	Recommended action	
EIO IS WRITE PROTECTED **To clear press OK**	The file system device is protected and no new files can be written to it.	Press the OK button to clear.
EIO NOT INITIALIZED	This file-storage component must be initialized before use.	Use the embedded Web server or HP Web Jetadmin to initialize the component.
Event log empty	No product events are in the log.	No action is necessary.
EXPECTED DRIVE MISSING	The product cannot find the encrypted hard drive.	Insert the encrypted hard drive.
FUSER KIT LOW	The fuser kit is low. The actual supply life remaining might vary. You do not need to replace the fuser kit at this time unless print quality is no longer acceptable.	If print quality is no longer acceptable, replace the fuser kit. Instructions are included with the fuser kit. Consider purchasing a replacement fuser kit so it is available when the installed fuser kit has reached the end of its estimated life.
FUSER KIT VERY LOW	The fuser kit is very low. The actual supply life remaining might vary. You do not need to replace the fuser kit at this time unless print quality is no longer acceptable. After an HP supply has reached the very low threshold, the HP premium protection warranty for that supply has ended.	If print quality is no longer acceptable, replace the fuser kit. Instructions are included with the fuser kit.
FUSER KIT VERY LOW **To continue press OK**	The fuser kit is very low and the **AT VERY LOW** menu for the fuser kit is set to **PROMPT TO CONTINUE**. The product stops printing until you press the OK button or replace the fuser kit. You do not need to replace the fuser kit at this time unless print quality is no longer acceptable. After an HP supply has reached the very low threshold, the HP premium protection warranty for that supply has ended.	Press the OK button to clear the message. If print quality is no longer acceptable, replace the fuser kit. Instructions are included with the fuser kit.
Genuine HP supplies installed	You have installed more than one new print cartridge that was manufactured by HP.	No action is necessary.
HP SECURE DRIVE DISABLED	The drive has been encrypted for another product.	Remove the drive or see the embedded Web server for more information.
INCOMPATIBLE <COLOR> CARTRIDGE	The indicated color print cartridge is not compatible with this product.	Replace the print cartridge with one that is designed for this product.
INCOMPATIBLE FUSER	The incorrect fuser was installed.	**CAUTION:** The fuser can be hot while the product is in use. Wait for the fuser to cool before handling it. 1. Open the right door. 2. Remove the incompatible fuser. 3. Install the correct fuser. 4. Close the right door.
INCOMPATIBLE SUPPLIES	Print cartridges or other supply items are installed that were not designed for this product. The product cannot print with these supplies installed.	Press the OK button to identify the incompatible supplies. Install supplies that are designed for this product.

Table 3-14 Control-panel messages (continued)

Description	Recommended action	
Incorrect	The PIN is incorrect.	Use the up arrow ▲ and down arrow ▼ buttons to enter the correct PIN.
Initializing	The product is starting.	No action is necessary. Please wait until the **Ready** message appears on the display.
Initializing permanent storage	Displayed when the product is turned on to show that permanent storage is being initialized.	No action is necessary.
INSTALL <COLOR> CARTRIDGE	The print cartridge has been removed or has been installed incorrectly.	Replace or reinstall the print cartridge correctly to continue printing. See Print cartridges on page 74.
INSTALL FUSER	The fuser has been removed or installed incorrectly.	**CAUTION:** The fuser can be hot while the product is in use. Wait for the fuser to cool before handling it. 1. Open the right door. 2. Install or adjust the fuser. 3. Close the right door.
INSTALL SUPPLIES	More than one supply is missing or is installed incorrectly.	Press the OK button to identify which supplies need to be replaced. Press the OK button a second time for more information about the specific supply. Insert the supply item or make sure the installed supply item is fully seated.
INSTALL TRANSFER UNIT	The transfer unit has been removed or installed incorrectly.	1. Open right door. 2. Install the transfer unit. 3. Close the right door. 4. If the error persists, use the manual sensor test to check the ITB alienation sensor (SR9). See Manual sensor test (special-mode test) on page 246. This sensor also detects the presence of the ITB. 5. Reconnect the ITB alienation sensor connector J78, and the connector J127 on the DC controller PCA.
INSUFFICIENT MEMORY TO LOAD FONTSDATA	The product does not have enough memory to load the data (for example, fonts or macros) from the location specified.	To continue without this information, press the OK button . If the message persists, add more memory.
Internal Disk Not Functional	The internal disk is not working correctly.	Replace the internal hard drive. See Hard drive on page 79.
LOAD TRAY 1 [TYPE] [SIZE]	Tray 1 is empty.	Load Tray 1 with the requested paper. If the paper is already in the Tray 1, press the help button **?**, and then press the OK button to print. To use another tray, remove paper from Tray 1, and then press the OK button to continue.

Table 3-14 Control-panel messages (continued)

Description	Recommended action	
LOAD TRAY 1 [TYPE] [SIZE] **To continue press OK**	The indicated tray is loaded and configured for a type and size other than the one specified in the job.	1. If the correct paper is loaded, press the OK button. 2. Otherwise, remove the incorrect paper and load the tray with the specified paper. 3. If prompted, confirm the size and type of paper loaded. 4. Confirm that the paper guides are in the correct position. 5. To use another tray, remove paper from the tray and then press the OK button.
LOAD TRAY 1 [TYPE] [SIZE] **To use another tray press OK**	Tray 1 is empty and the other trays are available.	1. If the correct paper is loaded, press the OK button. 2. Otherwise, remove the incorrect paper and load the tray with the specified paper. 3. If prompted, confirm the size and type of paper loaded. 4. Confirm that the paper guides are in the correct position. 5. To use another tray, remove paper from the tray and then press the OK button.
LOAD TRAY <X> [TYPE] [SIZE]	This message appears even though there is media loaded in the tray.	1. Use the sensor test to verify that the cassette media present sensor is correctly functioning. 2. Reconnect the cassette media present sensor intermediate connector (J58) and connector J115 on the DC controller PCA. 3. Make sure that the sensor flag on the media presence sensor is not damaged and moves freely.
LOAD TRAY <X> [TYPE] [SIZE] **Media insert required in tray**	This message appears when printing 100 x 150 mm (4 x 6 in) paper, which requires the HP postcard media insert in the indicated tray.	Install the HP postcard media insert in Tray 2, and load the requested paper. If you do not have the HP postcard media insert, you can print 100 x 150 mm (4 x 6 in) paper from Tray 1 without the insert.
LOAD TRAY <X> [TYPE] [SIZE] **Media insert required in tray** **To use another tray press OK**	This message appears when printing 100 x 150 mm (4 x 6 in) paper, which requires the HP postcard media insert in the indicated tray.	Install the HP postcard media insert in the indicated tray.
LOAD TRAY <X> [TYPE] [SIZE] **To use another tray press OK**	This message appears when the indicated tray is selected but is not loaded, and other paper trays are available for use. It also appears when the tray is configured for a different paper type or size than the print job requires.	1. Load the correct paper in the tray. 2. If prompted, confirm the size and type of paper loaded. 3. Otherwise, press the OK button to select another tray.

Table 3-14 Control-panel messages (continued)

Description	Recommended action	
LOADING PROGRAM <XX> **Do not power off**	Programs and fonts can be stored on the product's file system and are loaded into RAM when the product is turned on. The number XX specifies a sequence number indicating the current program being loaded.	No action necessary. Do not turn the product off.
MAGENTA CARTRIDGE LOW	The product indicates when a supply level is low. Actual print cartridge life might vary. You do not need to replace the print cartridge at this time unless print quality is no longer acceptable.	If print quality is no longer acceptable, replace the print cartridge. Consider purchasing a replacement cartridge so it is available when the installed cartridge has reached the end of its estimated life. See Print cartridges on page 74.
MAGENTA CARTRIDGE LOW **LESS THAN XXXX PAGES**	The product indicates when a supply level is low. Actual print cartridge life might vary. You do not need to replace the print cartridge at this time unless print quality is no longer acceptable. Estimated pages remaining is based upon the historical page coverage of this product.	If print quality is no longer acceptable, replace the print cartridge. Consider purchasing a replacement cartridge so it is available when the installed cartridge has reached the end of its estimated life. See Print cartridges on page 74.
MAGENTA CARTRIDGE VERY LOW	The product indicates when a supply level is very low. Actual print cartridge life might vary. Consider having a replacement print cartridge available to install when print quality is no longer acceptable. You do not need to replace the print cartridge at this time unless print quality is no longer acceptable. After an HP supply has reached the very low threshold, the HP premium protection warranty for that supply has ended.	If print quality is no longer acceptable, replace the print cartridge. See Print cartridges on page 74.
MAGENTA CARTRIDGE VERY LOW **To continue press OK**	The product indicates when a supply level is very low. Actual print cartridge life might vary. Consider having a replacement print cartridge available to install when print quality is no longer acceptable. You do not need to replace the print cartridge at this time unless print quality is no longer acceptable. After an HP supply has reached the very low threshold, the HP premium protection warranty for that supply has ended.	Press the OK button to continue. If print quality is no longer acceptable, replace the print cartridge. See Print cartridges on page 74.
MANUALLY FEED <TYPE> <SIZE>	This message appears when **MANUAL FEED** is selected and all trays are empty.	Load tray with requested paper. If paper is already in tray, press the help button **?** to exit message and then press the OK button to print. To use another tray, clear paper from Tray 1, press the help button **?** to exit the message and then press the OK button.
MANUALLY FEED <TYPE> <SIZE> **To continue press OK**	This message appears when **MANUAL FEED** is selected and Tray 1 is loaded.	Load tray with requested paper. To override the message, press the OK button to use a type and size of paper that is available in another tray.
MANUALLY FEED <TYPE> <SIZE> **To use another tray press OK**	This message appears when **MANUAL FEED** is selected, Tray 1 is not loaded, and other trays are available.	Load tray with requested paper. If paper is already in tray, press the help button **?** to exit the message and then press the OK button to print. To use another tray, clear paper from Tray 1, press the help button **?** to exit the message and then press the OK button.

Table 3-14 Control-panel messages (continued)

Description	Recommended action	
MANUALLY FEED OUTPUT STACK **Then press OK to print second side**	The product has printed the first side of a manual duplex job and is waiting for the user to insert the output stack to print the second side.	1. Maintaining the same orientation, remove document from the output bin. 2. Flip document printed side up. 3. Load document in Tray 1. 4. Press the OK button to print.
MOVING SOLENOID **To exit press ⊗**	The solenoid is moving as part of a component test.	No action is necessary.
MOVING SOLENOID AND MOTOR **To exit press ⊗**	The solenoid and a motor are moving as part of a component test.	No action is necessary.
No job to cancel	You have pressed the stop button ⊗ but the product is not actively processing any jobs.	No action is necessary.
NO STORED JOBS	Displayed when the user enters the **RETRIEVE JOB** menu and there are no jobs to retrieve.	No action is necessary.
NON HP SUPPLY INSTALLED	The product is using a non-HP supply. This message appears for six seconds after you install a non-HP supply.	Any product repair required as a result of using non-HP or unauthorized supplies is not covered under warranty. HP cannot ensure the accuracy or the availability of certain features.
Paused **To return to Ready press ⊗**	The product is paused, and there are no error messages pending at the display. The I/O continues receiving data until memory is full.	Press the stop button ⊗.
Performing upgrade **<X:YYY> % complete** **Do not power off**	The product is in the process of upgrading the firmware.	Please wait until the upgrade is complete.
Performing... COLOR BAND TEST	The color-band test is being performed.	No action is necessary.
Performing... PAPER PATH TEST	The product is performing a paper path test.	No action is necessary.
Please wait	The product is in the process of clearing data.	No action is necessary.
Powering off...	The product is shutting down.	Please wait until the product shuts down.
Printing <REPORT>	The product is printing an internal page. The product will return to the online Ready state when the page is completed.	No action is necessary.
PRINTING STOPPED **To continue press OK**	Time has expired on the Print/Stop test.	Press the OK button to continue.
Printing...ENGINE TEST	The product is printing an engine test page.	No action necessary.
Processing duplex job **Do not grab paper until job completes**	Paper temporarily comes into the output bin while printing a duplex job. Do not attempt to remove the pages until the job is complete.	Do not grab paper as it temporarily comes into the output bin. The message will disappear when the job is finished.

Table 3-14 Control-panel messages (continued)

Description		Recommended action
Processing...	The product is currently processing a job but is not yet picking pages. When paper motion begins, this message will be replaced by a message that indicates which tray the job is being printed from.	No action is necessary.
Processing... **CLEANING PAGE**	The product is processing a cleaning page.	No action is necessary.
Processing... copy <X> of <Y>	The product is currently processing or printing collated copies. The message indicates that copy X of Y total copies is currently being processed.	No action is necessary.
Processing... from tray <X>	The product is actively processing a job from the designated tray.	No action is necessary.
RAM DISK DEVICE FAILURE **To clear press OK**	The specified device has failed.	Press the OK button to clear.
RAM DISK FILE OPERATION FAILED **To clear press OK**	A PJL file system command attempted to perform an illogical operation.	Press the OK button to clear.
RAM DISK FILE SYSTEM IS FULL **To clear press OK**	A PJL file system command could not store something on the file system because the file system was full.	Press the OK button to clear.
RAM DISK IS WRITE PROTECTED **To clear press OK**	The file system device is protected and no new files can be written to it.	Press the OK button to clear.
RAM DISK NOT INITIALIZED	This file-storage component must be initialized before use.	Use the HP Embedded Web Server or HP Web Jetadmin to initialize the component.
Ready	The product is online and ready for data. No status or product attendance messages are pending at the display.	No action is necessary.
Ready **IP ADDRESS**	The product is online and ready.	No action is necessary.
Ready Diagnostics mode **To exit press ⊗**	The product is in Diagnostics mode.	To stop Diagnostic mode, press the Stop button ⊗.
Receiving Upgrade	A firmware upgrade is in progress.	Do not turn the product off until the product returns to **Ready**.
Remove all print cartridges **To exit press ⊗**	The product is testing the transfer unit assembly.	To perform the test, remove all the print cartridges. To cancel the test, press the stop button ⊗.
Remove at least one print cartridge **To exit press ⊗**	The product is testing the print-cartridge motor.	To perform the test, remove at least one print cartridge. To cancel the test, press the stop button ⊗.
REMOVE CARTRIDGE LOCKS	The cartridge shipping locks were not removed before you turned the product on.	1. Open the front door. 2. Remove the orange cartridge locks.

Table 3-14 Control-panel messages (continued)

Description	Recommended action	
REMOVE SHIPPING SHEET	The transfer unit shipping sheet was not removed before you turned the product on.	1. Open the right door. 2. Remove the shipping sheet. 3. Close the right door.
REPLACE <COLOR> CARTRIDGE	The product indicates when a supply level is at its estimated end of life. The actual life remaining might be different than the estimation. Have a replacement supply available to install when print quality is no longer acceptable. The supply does not need to be replaced now unless the print quality is no longer acceptable. After an HP supply has reached its approximated end of life, HP's premium Protection Warranty on that supply ends.	Replace the specified color cartridge. See Print cartridges on page 74. Or, configure the product to continue printing by using the **MANAGE SUPPLIES** menu. For more information about the **MANAGE SUPPLIES** menu, see Manage supplies menu on page 318.
REPLACE FUSER KIT	The product indicates when the fuser kit is at its estimated end of life. The actual life remaining might be different than the estimation. Have a replacement fuser kit available to install when print quality is no longer acceptable. The fuser kit does not need to be replaced now unless the print quality is no longer acceptable. After the fuser kit reaches its approximated end of life, HP's premium Protection Warranty on that fuser kit ends.	**CAUTION:** The fuser can be hot while the product is in use. Wait for the fuser to cool before handling it. 1. Open the right door. 2. Grasp the blue handles on both sides of the fuser and pull straight out to remove it. 3. Install the new fuser. 4. Close the right door.
REPLACE SUPPLIES	Two or more supplies are at the estimated end of life. The actual life remaining might be different than the estimation. Have a replacement supply available to install when print quality is no longer acceptable. The supply does not need to be replaced now unless the print quality is no longer acceptable. After an HP supply has reached its approximated end of life, HP's premium Protection Warranty on that supply ends.	Press the OK button to see which supplies need to be replaced. Or, configure the product to continue printing by using the **MANAGE SUPPLIES** menu. For more information about the **MANAGE SUPPLIES** menu, see Manage supplies menu on page 318.
REPLACE SUPPLIES - Using black only	You can configure the product to print using only black when the level of a color supply has reached its estimated end of life. However, the color supply might still be able to produce acceptable print quality. The supply life remaining is used to determine if a supply is very low. The supply life remaining is an approximation only and varies depending on the types of documents printed and other factors.	No user input is required for printing to continue in black. To continue printing in color, either replace the supply or reconfigure the product by using the **MANAGE SUPPLIES** menu on the control panel. For more information about ordering supplies, see Parts and diagrams on page 425. For more information about the **MANAGE SUPPLIES** menu, see Manage supplies menu on page 318.

Table 3-14 Control-panel messages (continued)

Description	Recommended action	
REPLACE SUPPLY **Printing black only**	At least one print cartridge has reached the very low condition and you have set the **COLOR CARTRIDGES** items to the **PRINT IN BLACK** option. The supply life remaining is used to determine if a supply is very low. The supply life remaining is an approximation only and varies depending on the types of documents printed and other factors.	No action is required for printing to continue in black. To continue printing in color, either replace the print cartridge or reconfigure the product by using the **MANAGE SUPPLIES** menu on the control panel. For more information about ordering supplies, see Parts and diagrams on page 425. For more information about the **MANAGE SUPPLIES** menu, see Manage supplies menu on page 318.
REPLACE TONER COLLECTION UNIT	The product indicates when a toner collection unit is at its estimated end of life. The actual life remaining might be different than the estimation. Have a replacement toner collection unit available to install when print quality is no longer acceptable. The toner collection unit does not need to be replaced now unless the print quality is no longer acceptable. After a toner collection unit has reached its approximated end of life, HP's premium Protection Warranty on that toner collection unit ends.	Replace the toner collection unit. If you wish to have the toner collection unit operate past its estimated capacity, configure the product to continue printing by using the **MANAGE SUPPLIES** menu. For more information about the **MANAGE SUPPLIES** menu, see Manage supplies menu on page 318. This is not a recommended option because of the risk of overfilling the toner collection unit, which could result in the need to service the product.
REPLACE TRANSFER KIT	The product indicates when a transfer kit is at its estimated end of life. The actual life remaining might be different than the estimation. Have a replacement transfer kit available to install when print quality is no longer acceptable. The transfer kit does not need to be replaced now unless the print quality is no longer acceptable. After a transfer kit has reached its approximated end of life, HP's premium Protection Warranty on that transfer kit ends.	Replace the transfer kit. Instructions are included with the transfer kit.
Request accepted please wait	The product has accepted a request to print an internal page, but the current job must finish printing before the internal page will print.	No action is necessary.
Resend Upgrade	The firmware upgrade was not completed successfully.	Attempt upgrade again.
Resetting kit count	You have selected the option to reset the count for a new supply item.	No action is necessary.
Restoring factory settings	The product is restoring factory settings.	No action is necessary.
Restoring...	The product is restoring settings.	Please wait until the process is complete.
RESTRICTED FROM PRINTING IN COLOR	This message appears when color printing is disabled for the product or when it is disabled for a particular user or print job.	To enable color printing for the product, change the **RESTRICT COLOR USE** setting in the Manage supplies menu on page 318.
ROM DISK DEVICE FAILURE **To clear press OK**	The specified device has failed.	Press the OK button to clear.

Table 3-14 Control-panel messages (continued)

Description	Recommended action	
ROM DISK FILE OPERATION FAILED **To clear press OK**	A PJL file system command attempted to perform an illogical operation.	Press the OK button to clear.
ROM DISK FILE SYSTEM IS FULL **To clear press OK**	A PJL file system command could not store something on the file system because the file system was full.	Press the OK button to clear.
ROM DISK IS WRITE PROTECTED **To clear press OK**	The file system device is protected and no new files can be written to it.	Press the OK button to clear.
Rotating <color> Motor **To exit press ⊗**	A component test is in progress; the component selected is the <color> cartridge motor.	Press the stop button ⊗ when ready to stop this test.
Rotating Motor **To exit press ⊗**	The product is executing a component test and the component selected is a motor.	Press the stop button ⊗ when ready to stop this test.
SANITIZING DISK <X>% COMPLETE **Do not power off**	The hard disk is being cleaned.	Contact the network administrator.
SIZE MISMATCH IN TRAY XX	The paper in the listed tray does not match the size specified for that tray.	1. Load the correct paper. 2. Verify the paper is positioned correctly. 3. Close the tray and verify that the control panel lists the correct paper size and type. Reconfigure the size and type if necessary.
Sleep mode on	The product is in sleep mode. A button press, receipt of printable data, or an error condition will clear this message.	No action is necessary.
STANDARD TOP BIN FULL **Remove all paper from bin**	The output bin is full.	Empty the bin and continue printing.
SUPPLIES IN WRONG POSITION	Two or more print-cartridge slots contain the wrong color print cartridge. From left to right, the print cartridges should be installed in this order: • Yellow • Magenta • Cyan • Black	Install the correct color cartridge in each slot.

Table 3-14 Control-panel messages (continued)

Description	Recommended action	
SUPPLIES LOW	This message appears when at least two supplies have reached the low threshold. The actual supply life remaining might vary. You do not need to replace the supplies at this time unless print quality is no longer acceptable. After an HP supply has reached the very low threshold, the HP premium protection warranty for that supply has ended.	To continue printing in color, either replace the supply or reconfigure the product by using the **MANAGE SUPPLIES** menu on the control panel. For more information about ordering supplies, see Parts and diagrams on page 425. For more information about the **MANAGE SUPPLIES** menu, see Manage supplies menu on page 318.
SUPPLIES LOW **PRINTING BLACK ONLY**	This message appears when at least two supplies have reached the low threshold. The product has been configured to print using only black when the level of a color supply is low. The actual supply life might vary. You do not need to replace the supplies at this time unless print quality is no longer acceptable.	To continue printing in color, either replace the supply or reconfigure the product by using the **MANAGE SUPPLIES** menu on the control panel. For more information about ordering supplies, see Parts and diagrams on page 425. For more information about the **MANAGE SUPPLIES** menu, see Manage supplies menu on page 318.
SUPPLIES VERY LOW	This message appears when at least two supplies have reached the very low threshold. The actual supply life remaining might vary. You do not need to replace the supplies at this time unless print quality is no longer acceptable. After an HP supply has reached the very low threshold, the HP premium protection warranty for that supply has ended.	To continue printing in color, either replace the supply or reconfigure the product by using the **MANAGE SUPPLIES** menu on the control panel. For more information about ordering supplies, see Parts and diagrams on page 425. For more information about the **MANAGE SUPPLIES** menu, see Manage supplies menu on page 318.
SUPPLIES VERY LOW **PRINTING BLACK ONLY**	This message appears when at least two supplies have reached the very low threshold. The product has been configured to print using only black when the level of a color supply is very low. The actual supply life might vary. You do not need to replace the supplies at this time unless print quality is no longer acceptable. After an HP supply has reached the very low threshold, the HP premium protection warranty for that supply has ended.	To continue printing in color, either replace the supply or reconfigure the product by using the **MANAGE SUPPLIES** menu on the control panel. For more information about ordering supplies, see Parts and diagrams on page 425. For more information about the **MANAGE SUPPLIES** menu, see Manage supplies menu on page 318.
SUPPLIES VERY LOW **To continue press OK**	This message appears when at least two supplies have reached the low threshold. The actual supply life remaining might vary. You do not need to replace the supplies at this time unless print quality is no longer acceptable. After an HP supply has reached the very low threshold, the HP premium protection warranty for that supply has ended.	To continue printing in color, either replace the supply or reconfigure the product by using the **MANAGE SUPPLIES** menu on the control panel. For more information about ordering supplies, see Parts and diagrams on page 425. For more information about the **MANAGE SUPPLIES** menu, see Manage supplies menu on page 318.

Table 3-14 Control-panel messages (continued)

Description	Recommended action	
TONER COLLECTION UNIT LOW	The toner collection unit is almost full. The actual supply life remaining might vary. You do not need to replace the toner collection unit at this time unless print quality is no longer acceptable.	To continue printing, either press the OK button or replace the toner collection unit. See Toner-collection unit on page 76.
TONER COLLECTION UNIT VERY LOW	The toner collection unit is almost full. The actual supply life remaining might vary. You do not need to replace the toner collection unit at this time unless print quality is no longer acceptable. After an HP supply has reached the very low threshold, the HP premium protection warranty for that supply has ended.	To continue printing, either press the OK button or replace the toner collection unit. See Toner-collection unit on page 76.
TONER COLLECTION UNIT VERY LOW **To continue press OK**	The toner collection unit is almost full. The actual supply life remaining might vary. You do not need to replace the toner collection unit at this time unless print quality is no longer acceptable. After an HP supply has reached the very low threshold, the HP premium protection warranty for that supply has ended.	To continue printing, either press the OK button or replace the toner collection unit. See Toner-collection unit on page 76.
TRANSFER KIT LOW	This message appears when the transfer kit reaches the low threshold. The actual supply life remaining might vary. You do not need to replace the transfer kit at this time unless print quality is no longer acceptable.	No action is necessary to continue. If the print quality is no longer acceptable, replace the transfer kit. Instructions are included with the new transfer kit.
TRANSFER KIT LOW **LESS THAN XXXX PAGES**	The transfer kit is nearing the end of its estimated useful life. The actual supply life might vary. Estimated pages remaining is based upon the historical page coverage of this product. You do not need to replace the transfer kit at this time unless print quality is no longer acceptable.	No action is necessary to continue. If the print quality is no longer acceptable, replace the transfer kit. Instructions are included with the new transfer kit.
TRANSFER KIT VERY LOW	This message appears when the transfer kit has reached the very low threshold. The actual supply life remaining might vary. You do not need to replace the supplies at this time unless print quality is no longer acceptable. After an HP supply has reached the very low threshold, the HP premium protection warranty for that supply has ended.	To continue printing in color, either replace the supply or reconfigure the product by using the **MANAGE SUPPLIES** menu on the control panel. For more information about ordering supplies, see Parts and diagrams on page 425. For more information about the **MANAGE SUPPLIES** menu, see Manage supplies menu on page 318.
TRANSFER KIT VERY LOW **To continue press OK**	This message appears when the transfer kit has reached the very low threshold. The actual supply life remaining might vary. You do not need to replace the supplies at this time unless print quality is no longer acceptable. After an HP supply has reached the very low threshold, the HP premium protection warranty for that supply has ended.	To continue printing in color, either replace the supply or reconfigure the product by using the **MANAGE SUPPLIES** menu on the control panel. For more information about ordering supplies, see Parts and diagrams on page 425. For more information about the **MANAGE SUPPLIES** menu, see Manage supplies menu on page 318.

Table 3-14 Control-panel messages (continued)

Description	Recommended action	
TRAY <X> [TYPE] [SIZE] **To change size or type press OK** **To accept settings press ⮌**	This message states the current type and size configuration of the tray.	To change size or type press the OK button. To accept settings press the back arrow ⮌.
TRAY <X> EMPTY [TYPE] [SIZE]	The specified tray is empty and the current job does not need this tray to print.	Refill the tray at a convenient time.
TRAY <X> OPEN	The specified tray is open or not closed completely.	Close the tray. **NOTE:** If this message appears and the lifter-base assembly was removed or replaced, make sure that the connector on the assembly is correctly connected and fully seated.
TRAY <X> OVERFILLED **Remove some paper**	The tray is filled above the stack-height marking.	Remove enough paper so that the paper stack does not exceed the limit for the tray. **NOTE:** If this message appears and the paper-pickup assembly was removed or replaced, make sure that the connector at the back of the assembly is correctly connected and fully seated.
TRAY <X> OVERFILLED **To use another tray press OK**	The tray is filled above the stack-height marking.	Remove enough paper so that the paper stack does not exceed the limit for the tray or press OK to use another tray. **NOTE:** If this message appears and the paper-pickup assembly was removed or replaced, make sure that the connector at the back of the assembly is correctly connected and fully seated.
TRAY <X> SIZE = <Size> **Media insert required in tray**	The product is set to print on a small paper size that requires the HP postcard media-insert to be installed in this tray.	To use this size paper, install the media insert before loading the paper. If you do not have the HP postcard media insert, 100 x 150 mm (4 x 6 in) paper can be printed from Tray 1 without the insert.
TYPE MISMATCH IN TRAY X	The specified tray contains a paper type that does not match the configured type.	The specified tray will not be used until this condition is addressed. Printing can continue from other trays. 1. Load the correct paper in the specified tray. 2. Verify the type configuration.
UNABLE TO COPY JOB	The product does not have enough memory to produce multiple original prints of this job. One copy will be printed.	Add more memory to the product. See Memory DIMM on page 81.
UNABLE TO STORE JOB	A job cannot be stored because of a memory or configuration problem.	Install additional memory in the product.
Unsupported data on [FS] DIMM in slot x **To clear press OK**	The data on the DIMM for the indicated file system is not a type that the product supports. [FS] can be either a ROM or Flash file system.	Press the OK button to clear the message. Replace the DIMM. See Memory DIMM on page 81.

Table 3-14 Control-panel messages (continued)

Description	Recommended action	
UNSUPPORTED DRIVE INSTALLED	A non-supported hard drive has been installed.	Turn off the product, remove the hard drive, and then turn on the product.
UNSUPPORTED SUPPLY IN USE **For help press ?**	A non-supported supply has been installed.	Turn off the product, remove the supply, and then turn on the product.
UNSUPPORTED SUPPLY INSTALLED **To continue press OK**	The print cartridge is for a different HP product.	If print quality is no longer acceptable, replace the print cartridge. For a list of supported print cartridges, see Parts and diagrams on page 425.
USB ACCESSORY ERROR	This message appears when a connected USB accessory draws too much power. When this happens, the ACC port is disabled and printing stops.	Remove the USB accessory, and then restart the product Use a USB accessory that uses less power or that contains its own power supply.
USB ACCESSORY NOT FUNCTIONAL	A USB accessory is not working correctly.	1. Turn product off. 2. Disconnect the USB accessory, and replace with a new USB accessory.
USB ACCESSORY UNAVAILABLE **To clear press OK**	The USB accessory is currently unavailable.	To use the USB accessory, install the software for the USB accessory and turn the product off. Then, turn the product on with the accessory attached.
USB NEEDS TOO MUCH POWER **Remove USB and turn off then on**	A USB accessory is drawing too much electrical current. Printing cannot continue.	Remove the USB accessory, and then restart the product. Use a USB accessory that uses less power or that contains its own power supply.
USB STORAGE DEVICE FAILURE **To clear press OK**	The specified device has failed.	Press the OK button to clear.
USB STORAGE FILE OPERATION FAILED **To clear press OK**	A PJL file system command attempted to perform an illogical operation.	Press the OK button to clear.
USB STORAGE FILE SYSTEM IS FULL **To clear press OK**	A PJL file system command could not store something on the file system because the file system was full.	Press the OK button to clear.
USB STORAGE IS WRITE PROTECTED **To clear press OK**	The file system device is protected and no new files can be written to it.	Press the OK button to clear.
USB STORAGE NOT INITIALIZED	This file-storage component must be initialized before use.	Use the embedded Web server or HP Web Jetadmin to initialize the component.
USE TRAY [X] [TYPE] [SIZE] **To continue press OK**	The specified tray type and/or size is mismatched.	1. Use the up arrow ▲ or down arrow ▼ to select the correct tray. 2. Press the OK button to select the tray.
USED SUPPLY INSTALLED **To continue press OK**	The print cartridge has been previously used.	If you believe you purchased a genuine HP supply, go to www.hp.com/go/anticounterfeit.

Table 3-14 Control-panel messages (continued)

Description	Recommended action	
WAIT FOR PRINTER TO REINITIALIZE	This message can appear for a variety of reasons: • The RAM DISK settings changed before the product has restarted. • The product is restarting after changing external device modes. • Diagnostics has been exited. • A new formatter has been installed with an old engine or a new engine has been installed with an old formatter.	No action is necessary.
WAITING FOR TRAY <X> TO LIFT	The specified tray is lifting paper for feeding.	No action is necessary.
WARMING UP	The product is coming out of Sleep mode.	No action is necessary.
WRONG CARTRIDGE IN <COLOR> SLOT	The indicated slot for a print cartridge contains a cartridge that is not the correct color. From left to right, the print cartridges should be installed in this order: • Yellow • Magenta • Cyan • Black	Remove the print cartridge from that slot, and install a cartridge that is the correct color.
YELLOW CARTRIDGE LOW	The product indicates when a supply level is low. Actual print cartridge life might vary. You do not need to replace the print cartridge at this time unless print quality is no longer acceptable.	If print quality is no longer acceptable, replace the print cartridge. Consider purchasing a replacement cartridge so it is available when the installed cartridge has reached the end of its estimated life. See Print cartridges on page 74.
YELLOW CARTRIDGE LOW **LESS THAN XXXX PAGES**	The product indicates when a supply level is low. Actual print cartridge life might vary. You do not need to replace the print cartridge at this time unless print quality is no longer acceptable. Estimated pages remaining is based upon the historical page coverage of this product.	If print quality is no longer acceptable, replace the print cartridge. Consider purchasing a replacement cartridge so it is available when the installed cartridge has reached the end of its estimated life. See Print cartridges on page 74.

Table 3-14 Control-panel messages (continued)

Description	Recommended action	
YELLOW CARTRIDGE VERY LOW	The product indicates when a supply level is very low. Actual print cartridge life might vary. Consider having a replacement print cartridge available to install when print quality is no longer acceptable. You do not need to replace the print cartridge at this time unless print quality is no longer acceptable. After an HP supply has reached the very low threshold, the HP premium protection warranty for that supply has ended.	If print quality is no longer acceptable, replace the print cartridge. See Print cartridges on page 74.
YELLOW CARTRIDGE VERY LOW **To continue press OK**	The product indicates when a supply level is very low. Actual print cartridge life might vary. Consider having a replacement print cartridge available to install when print quality is no longer acceptable. You do not need to replace the print cartridge at this time unless print quality is no longer acceptable. After an HP supply has reached the very low threshold, the HP premium protection warranty for that supply has ended.	Press the OK button to continue. If print quality is no longer acceptable, replace the print cartridge. See Print cartridges on page 74.

Event log messages

This section describes messages that only appear in the event log. For additional numeric messages, see the control-panel message section in this manual. See Control-panel messages on page 345.

Print an event log

Use the event log to help diagnose and solve product problems.

1. Press the Home button.
2. Press the down arrow ▼ to highlight **DIAGNOSTICS**, and then press the OK button.
3. Press the down arrow ▼ to highlight **PRINT EVENT LOG**, and then press the OK button to print the pages.

Show an event log

Use the control panel to view the event log.

1. Press the Home button.
2. Press the down arrow ▼ to highlight **DIAGNOSTICS**, and then press the OK button.
3. Press the down arrow ▼ to highlight **SHOW EVENT LOG**, and then press the OK button to print the pages.

Sample event log

Figure 3-56 Sample event log

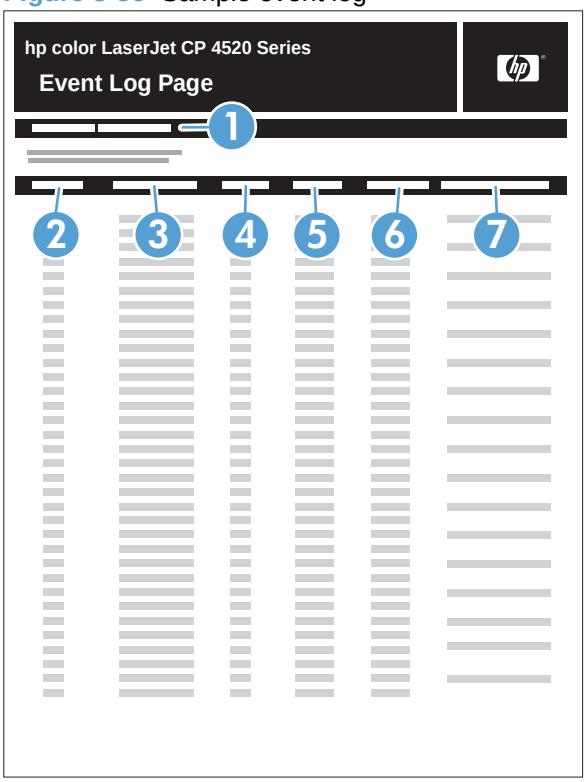

1	Product information
2	Event number
3	Date and time
4	Engine cycles
5	Event log code
6	Firmware version number
7	Description of personality

Clear the event log

Use the **SERVICE** menu to clear the event log.

1. Press the Home button.
2. Press the down arrow ▼ to highlight **SERVICE**, and then press the OK button.
3. Press the down arrow ▼ to highlight **CLEAR EVENT LOG**, and then press the OK button to print the pages.

Event log message table

Event log message	Description	Comments
10.XX.00	Black toner cartridge	
10.XX.01	Cyan toner cartridge	
10.XX.02	Magenta toner cartridge	
10.XX.03	Yellow toner cartridge	
10.XX.04	Drum cartridge	
10.XX.05	Black drum cartridge	
10.XX.06	Cyan drum cartridge	
10.XX.07	Magenta drum cartridge	
10.XX.08	Yellow drum cartridge	
10.XX.22	Transfer belt	
10.XX.23	Fuser	
10.XX.24	Transport kit	
10.XX.26	Maintenance kit	
10.XX.31	Cleaning bottle	
10.XX.33	Transfer roller	
10.XX.34	Transfer kit	
10.XX99	Unkown	
10.50.23	Fuser kit life reset above replacement threshold.	
10.70.23	Fuser kit	
10.70.24	Transfer kit	
10.81.00	Not printing black only	Printing monochrome after the color cartridge out was deactivated
13.01.00	PAPER FEED 1, PAPER LATE JAM	
13.02.00	PAPER FEED 1, PAPER STOPPED JAM	
13.03.00	PAPER FEED 2, PAPER LATE JAM	
13.04.00	PAPER FEED 2, PAPER STOPPED JAM	
13.05.00	FUSER OUTPUT, PAPER LATE JAM	
13.06.00	FUSER OUTPUT, PAPER STOPPED JAM	
13.08.00	NON-SPECIFIC PAPER JAM	
13.11.00	DUPLEX TURN AROUND, PAPER STOPPED JAM	
13.12.00	DUPLEX PATH, PAPER LATE JAM	

Event log message	Description	Comments
13.13.00	DUPLEX PATH, PAPER STOPPED JAM	
13.1C.00	FUSER ACCORDION JAM	
13.20.00	PRINTER COULD NOT AUTOMATICALLY EJECT PAPER	
13.21.00	DOOR OPEN JAM	
13.30.00	PAPER FEED 1, PAPER LATE JAM	
41.XX.00	• X=11 Yellow laser scanner • X=12 Magenta laser scanner • X=13 Cyan laser scanner • X=14. Black laser scanner • X=15. Main drive • X=16. Main drive • X=17. Main drive scanner	
54.01	The humidity-environment sensor is abnormal.	Ensure the product is in a supported environment. If the error persists, replace the CN1 environment sensor.
54.02	Printer error	Developer failure
54.03	Printer error	Density sensor failure.
54.05	Printer error	Media sensor out of range.
54.06	The DMAX density or OHT sensor is out of range.	1. Press the Home button. 2. Press the down arrow ▼ to highlight **CONFIGURE DEVICE**, and then press the OK button. 3. Press the down arrow ▼ to highlight **PRINT QUALITY**, and then press the OK button. 4. Press the down arrow ▼ to highlight **QUICK CALIBRATE NOW**, and then press the OK button.
54.07	Printer error	Rotary motor error
54.XX	Drum phase sensor is out of range. • XX = 07 Yellow • XX = 08 Magenta • XX = 09 Cyan • XX = 0A Black	

Event log message	Description	Comments
54.0B.XX	The density sensor is out of range. • XX = 00 Black • XX = 01 Cyan • XX = 02 Magenta • XX = 03 Yellow	
54.0C.XX	Halftone calibration error. • XX = 00: Black Dhalf warning • XX = 01: Cyan Dhalf warning • XX = 02: Magenta Dhalf warning • XX = 03: Yellow Dhalf warning	
54.0D.XX	• XX = 00: Black density-measurement abnormality • XX = 01: Cyan density-measurement abnormality • XX = 02: Magenta density-measurement abnormality • XX = 03: Yellow density-measurement abnormality	1. Press the Home button. 2. Press the down arrow ▼ to highlight **CONFIGURE DEVICE**, and then press the OK button. 3. Press the down arrow ▼ to highlight **PRINT QUALITY**, and then press the OK button. 4. Press the down arrow ▼ to highlight **QUICK CALIBRATE NOW**, and then press theOK button.
54.0F.XX	• XX=00: Black misregistration is out of range. • XX=01: Cyan misregistration is out of range. • XX=02: Magenta misregistration is out of range. • XX=03: Yellow misregistration is out of range.	1. Press the Home button. 2. Press the down arrow ▼ to highlight **CONFIGURE DEVICE**, and then press the OK button. 3. Press the down arrow ▼ to highlight **PRINT QUALITY**, and then press the OK button. 4. Press the down arrow ▼ to highlight **FULL CALIBRATE NOW**, and then press the OK button.
54.12	Printer error	ITB speed control sensor.
54.14	CPR sensor abnormal	Replace RD sensor assembly.
54.1C	Auto clean error	Check RD sensors tor toner residue.

Event log message	Description	Comments
54.1E.XX	Halftone calibration error • XX = 00 Bad internal data • XX = 01 Bad external data • XX = 02 Memory allocation • XX = 03 No default tables • XX = 04 Bad parameters • XX = 05 Cyan data is out of range. • XX = 06 Magenta data is out of range. • XX = 07 Yellow data is out of range. • XX = 08 Black data is out of range. • XX = 09 Cyan data is noisy. • XX = 0A Magenta data is noisy. • XX = 0B Yellow data is noisy. • XX = 0C Black data is noisy.	
54.20	Media sensor is not calibrated	
54.21	Scanner beam adjustment warning • XX = 01 First scanner • XX = 02 Second scanner	
54.35	Drum speed adjustment abnormality warning	
55.06.01	The DC controller NVRM has an abnormal read/write.	1. Turn the product off then on. 2. If the error persists, replace the DC Controller. See DC controller PCA and tray on page 161.
55.06.02	The DC controller NVRM is not accessible.	1. Turn the product off then on. 2. If the error persists, replace the DC Controller. See DC controller PCA and tray on page 161.
55.901C	DCC restored	DCC NVRAM was restored from the formatter.
61.00.01	Color table error	This event occurs when the color table cannot read a table from the disk and the component reverts to the version in RAM. The file could be corrupt, missing, or the disk could have failed. No messages display on the control panel.
67.XX.00		A system variable (XX) is out of range.
68 8X04	The permanent storage date does not match the engine.	

Event log message	Description	Comments
68 8X05	The permanent storage date does match the engine. Disk error: either the number does not match or the write failed	
74.00	New registration roller	
8x7345	The disk was successfully cleaned and sanitized. x = slot number	
8x7346	The hard disk or compact flash disk cleaning or sanitizing failed. This is usually caused by a failure of the disk hardware. x = slot number	
8x7347	Some of the sanitized disk did not verify correctly.	
88.00.XX	Fail code from the engine self-test execution	
99.00.01	No control panel message displays.	
99.00.02	The firmware image has a CRC error.	
99.00.03	A IO timeout occurred when reading the header number and size.	
99.00.04	A disk error occurred.	
99.00.05	A IO timeout occurred when reading the remaining header.	
99.00.06	A IO timeout occurred when reading image data.	
99.00.07	An unexpected read error occurred when reading the header number and size.	
99.00.08	An unexpected read error occurred when reading the remainder of the header.	
99.00.09	Unexpected read error occurred when reading image data.	
99.00.10	Job canceled when reading header number and size	
99.00.11	The job was cancelled when reading the remainder of the header.	
99.00.12	The header number is one, but the header size does not match the version one size.	
99.00.13	The header number is two, but the header size does not match the version two size.	
99.00.28	The signature was bad but the customer accepted it anyway.	

Clear paper jams

Common causes of jams

The product is jammed.

Cause	Solution
The paper does not meet specifications.	Use only paper that meets HP specifications. See the product user guide.
A component is installed incorrectly.	Verify that the transfer belt and transfer roller are correctly installed.
You are using paper that has already passed through a product or copier.	Do not use paper that has been previously printed on or copied.
An input tray is loaded incorrectly.	Remove any excess paper from the input tray. Make sure that the stack is below the maximum stack height mark in the tray.
The paper is skewed.	The input-tray guides are not adjusted correctly. Adjust them so they hold the stack firmly in place without bending it.
The paper is binding or sticking together.	Remove the paper, flex it, rotate it 180°, or flip it over. Reload the paper into the input tray.
The paper is removed before it settles into the output bin.	Reset the product. Wait until the page completely settles in the output bin before removing it.
During two-sided printing, you removed the paper before the second side of the document was printed.	Reset the product and print the document again. Wait until the page completely settles in the output bin before removing it.
The paper is in poor condition.	Replace the paper.
The internal tray rollers are not picking up the paper.	If the paper is heavier than 220 g/m^2 (58 lb), it might not be picked from the tray. The rollers are worn. Replace the rollers.
The paper has rough or jagged edges.	Replace the paper.
The paper is perforated or embossed.	Perforated or embossed paper does not separate easily. Feed single sheets from Tray 1.
Paper was not stored correctly.	Replace the paper in the trays. Paper should be stored in the original packaging in a controlled environment.

The product is jammed.

Cause	Solution
Not all product packing material was removed.	Verify that the packing tape, cardboard, and plastic shipping locks have been removed from the product.
The HP postcard media insert is installed in Tray 2, and you are not printing on 10 x 15 cm (4 x 6 in) paper. Or The HP postcard media insert is not installed in Tray 2, and you are printing on 10 x 15 cm (4 x 6 in) paper.	Always use the HP postcard media insert when printing on 10 x 15 cm (4 x 6 in) paper, but remove it when printing on other sizes.

Figure 3-57 Common causes of jams (by area)

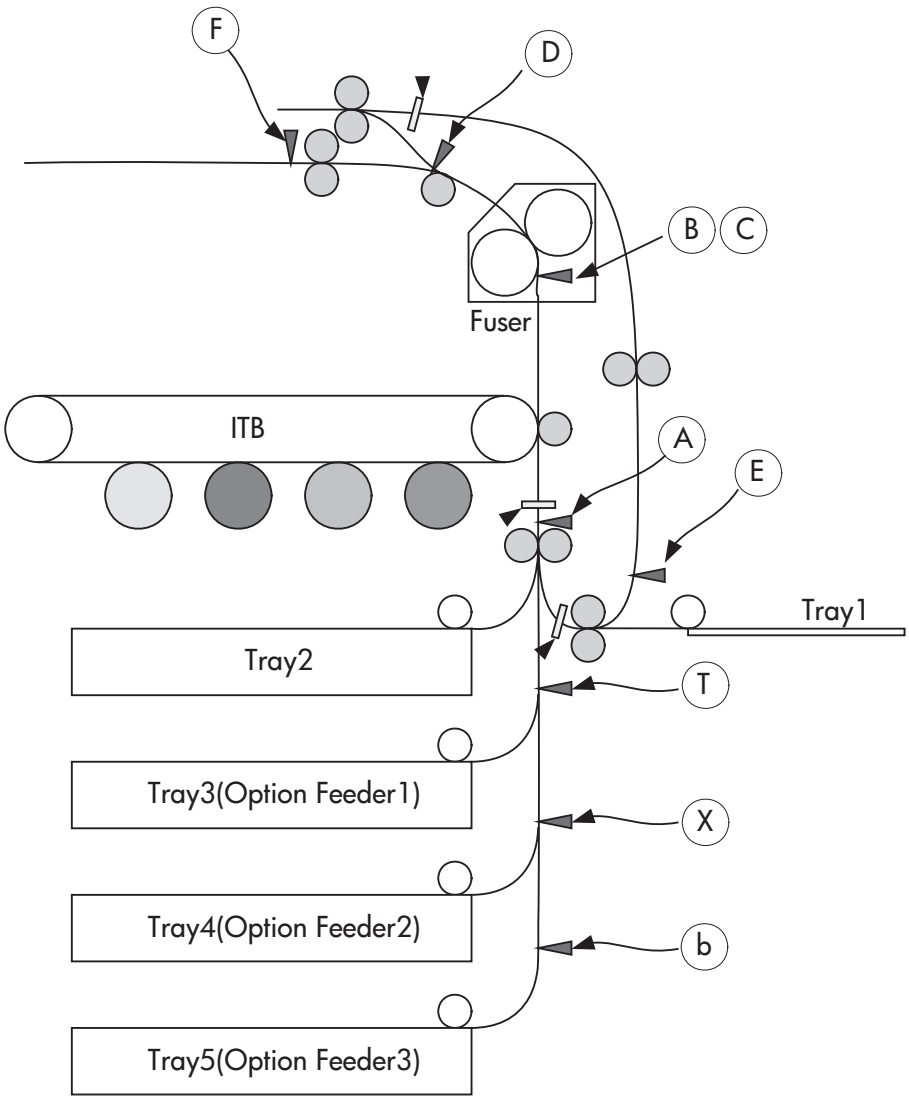

Item	Description	Item	Description
T	SR4 (PDU) Tray 3 feed sensor	E	SR22 Duplex re-pickup sensor (duplex models only)

Item	Description	Item	Description
X	SR7 (PDU) Tray 4 feed sensor	F	SR6 Delivery tray media full sensor
b	SR10 (PDU) Tray 5 feed sensor	X-1	Registration stop position
A	SR20 Top-of-Page sensor (TOP)	X-2	Duplex media waiting position 1 (duplex models only)
B, C	SR14/15 Loop sensors 1/2	X-3	Duplex media waiting position 2 (duplex models only)
D	SR5 Fuser delivery sensor		

Table 3-15 Common causes of jams (by area)

Jam code	Jammed media position
13.01.00	• Leading edge of media fed from Tray 3 is stopped before T • Leading edge of media fed from Tray 4 is stopped before X • Leading edge of media fed from Tray 5 is stopped before b
13.30.00	• Leading edge of media fed from Tray 1 is stopped before A • Leading edge of media fed from Tray 2 is stopped before A • Leading edge of media fed from Tray 3 is stopped before A • Leading edge of media fed from Tray 4 is stopped before A • Leading edge of media fed from Tray 5 is stopped before A
13.03.00	• Leading edge of media fed from Tray 4 is stopped before T • Leading edge of media fed from Tray 5 is stopped before T
13.02.00	• Media stays at A
13.04.00	• Media stays at T
13.05.00	• Leading edge of media is stopped between A and D
13.06.00	• Media stays at D
13.08.00	• Media fed from Tray 4 stays at X • Media fed from Tray 5 stays at b
13.12.00	• Duplex refeed media is stopped between D and E
13.13.00	• Duplex refeed media is stopped between E and A
13.20.00	• At power on with door closed, media stays at D • At auto-flushing, media stays at T, X, b, A, B/C, D, or E
13.21.00	• Media jammed at any position
13.1C.00	• Media fuser wrap

Jam locations

Use this illustration to identify locations of jams. In addition, instructions appear on the control panel to direct you to the location of jammed paper and how to clear it.

NOTE: Internal areas of the product that might need to be opened to clear jams have green handles or green labels.

Figure 3-58 Jam locations

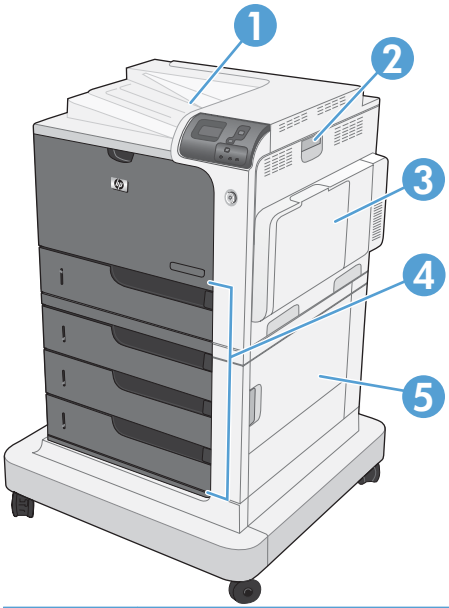

1	Output bin
2	Right door
3	Tray 1 area
4	Tray 2, and optional Trays 3, 4, and 5
5	Lower-right door

When a jam occurs, a message appears on the control-panel display that describes the location of the jam. The following table lists the messages that can appear and provides links to the procedures for clearing the jam.

WARNING! To avoid electrical shock, remove any necklaces, bracelets, or other metal items before reaching into the inside of the product.

Type of jam	Procedure
13.XX.YY JAM IN RIGHT DOOR	See Clear jams in the right door on page 387.
13.XX.YY JAMS IN RIGHT DOOR	
13.XX.YY FUSER AREA JAM	
13.XX.YY FUSER WRAP JAM	
13.XX.YY JAM ABOVE TOP OUTPUT BIN	See Clear jams in the output bin area on page 390.

Type of jam	Procedure
13.XX.YY JAM IN TRAY 1	See Clear jams in Tray 1 on page 390.
13.XX.YY JAM IN TRAY 2	See Clear jams in Tray 2 or optional Trays 3, 4, or 5 on page 392.
13.XX.YY JAM IN OPTIONAL TRAYS	See Clear jams in Tray 2 or optional Trays 3, 4, or 5 on page 392.
13.XX.YY JAM IN LOWER RIGHT DOOR	See Clear jams in the lower right door (Tray 3, 4, or 5) on page 393.

Clear jams in the right door

△ **CAUTION:** The fuser can be hot while the product is in use. Wait for the fuser to cool before handling it.

1. Open the right door.

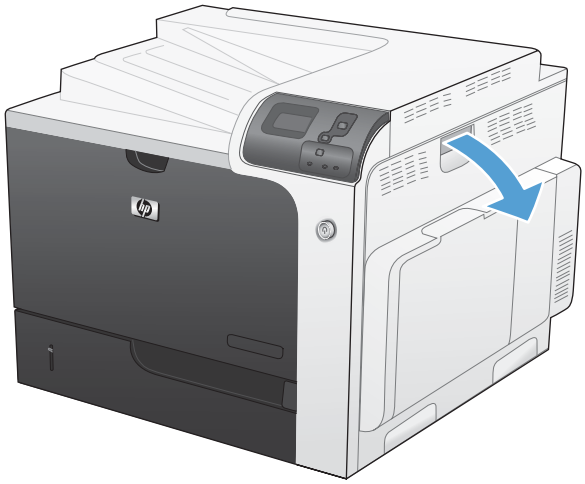

2. Gently pull the paper out of the pickup area.

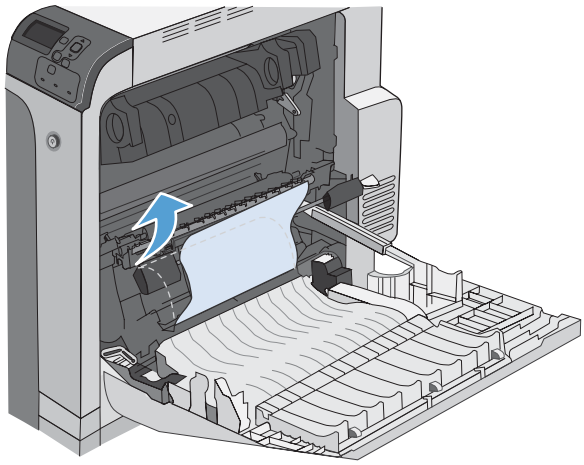

3. If paper is visible entering the bottom of the fuser, gently pull downward to remove it.

   CAUTION: Do not touch the rollers on the transfer roller. Contaminants can affect print quality.

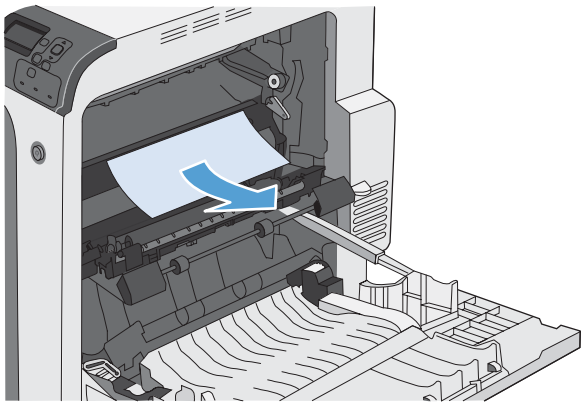

4. If paper is jammed as it enters the output bin, remove the fuser and gently pull the paper downward to remove it.

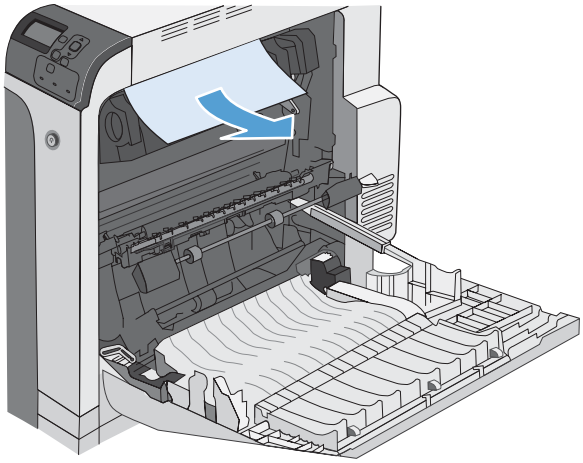

5. Paper could be jammed inside the fuser where it would not be visible. Remove the fuser to check for jammed paper inside.

   CAUTION: The fuser can be hot while the product is in use. Wait for the fuser to cool before handling it.

6. Grasp the fuser handles, lift up slightly, and pull straight out to remove the fuser.

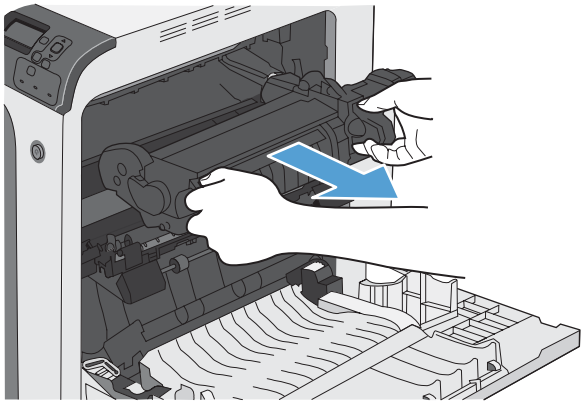

7. Open the jam-access door. If paper is jammed inside the fuser, gently pull it straight up to remove it. If the paper tears, remove all paper fragments.

   CAUTION: Even if the body of the fuser has cooled, the rollers that are inside could still be hot. Do not touch the fuser rollers until they have cooled.

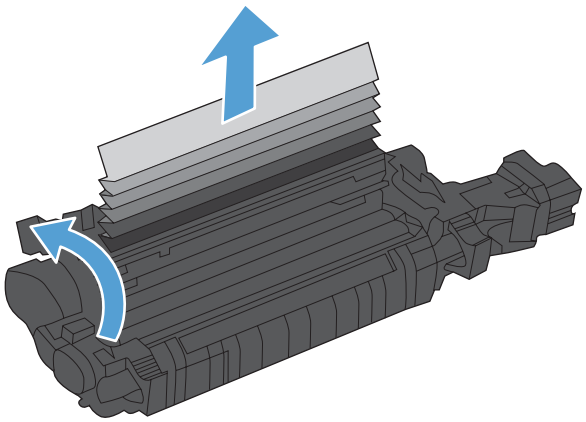

8. Close the jam-access door, and push the fuser completely into the product.

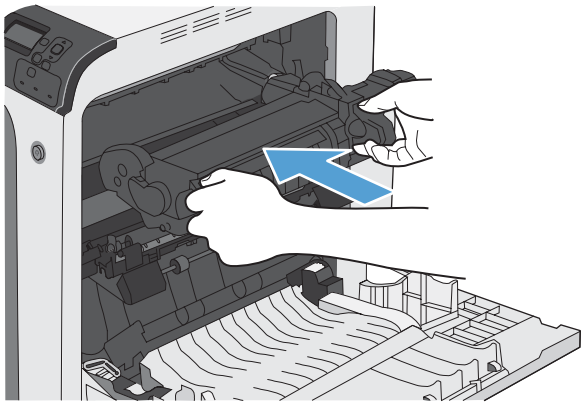

9. Close the right door.

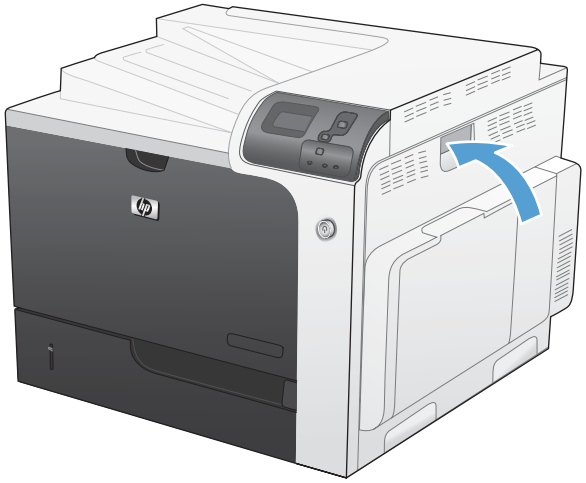

Clear jams in the output bin area

1. If paper is visible from the output bin, grasp the leading edge and remove it.

Clear jams in Tray 1

1. If jammed paper is visible in Tray 1, clear the jam by gently pulling the paper straight out. Press the OK button to clear the message.

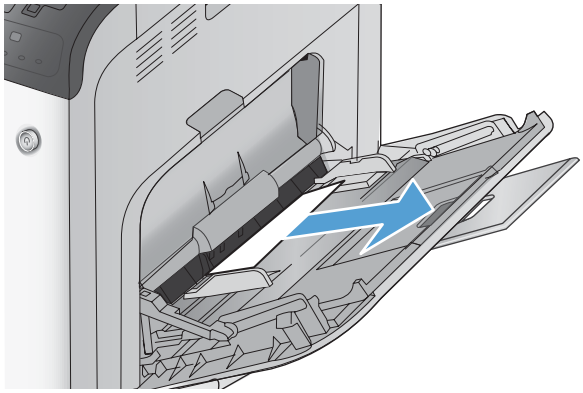

2. If you cannot remove the paper, or if no jammed paper is visible in Tray 1, close Tray 1 and open the right door.

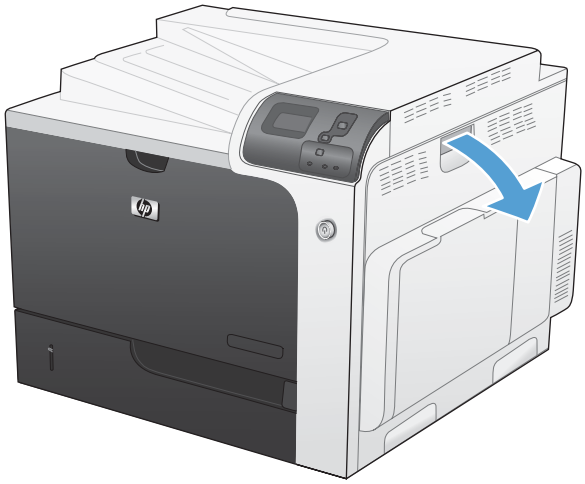

3. Gently pull the paper out of the pick up area.

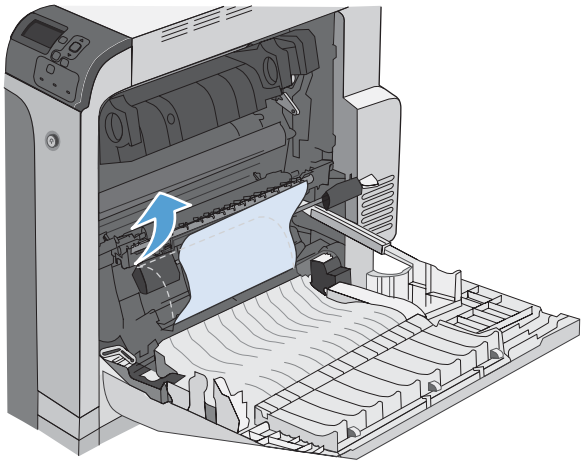

4. Close the right door.

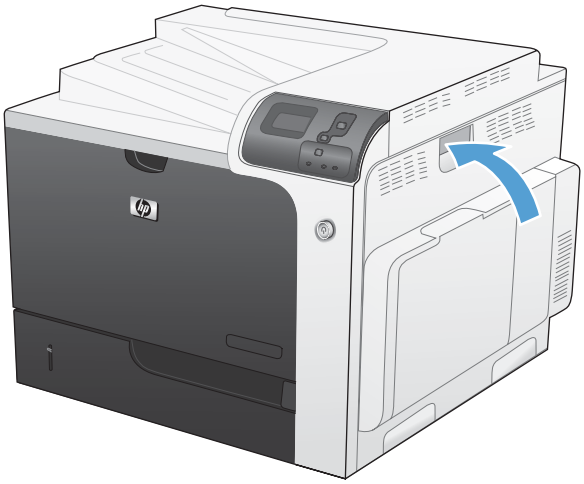

Clear jams in Tray 2 or optional Trays 3, 4, or 5

△ **CAUTION:** Opening a tray when paper is jammed can cause the paper to tear and leave pieces of paper in the tray, which might cause another jam. Be sure to clear jams before opening the tray.

1. Open Tray 2 and make sure that the paper is stacked correctly. Remove any jammed or damaged sheets of paper. To access jammed paper from the tray cavity, remove Tray 2 from the product.

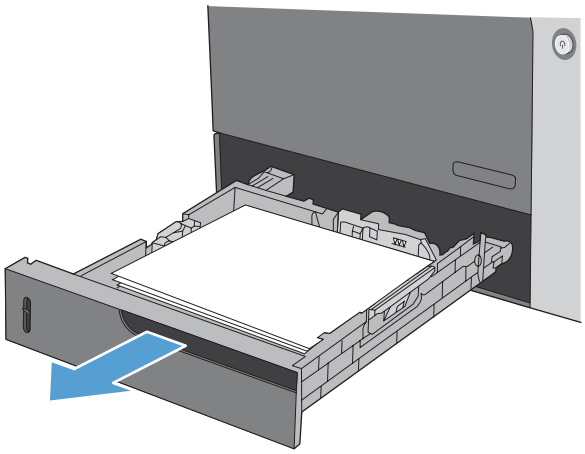

2. Close the tray.

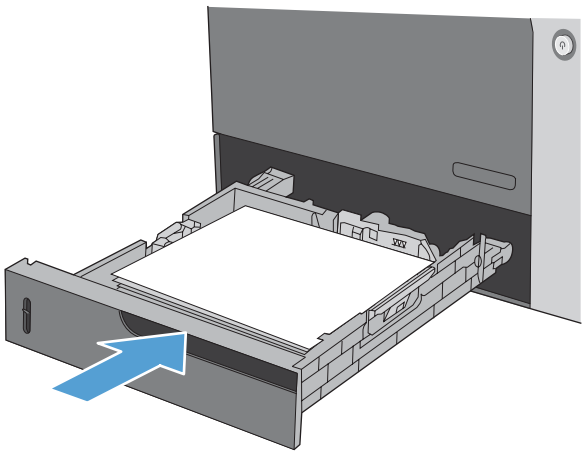

Clear jams in the lower right door (Tray 3, 4, or 5)

1. Open the lower right door.

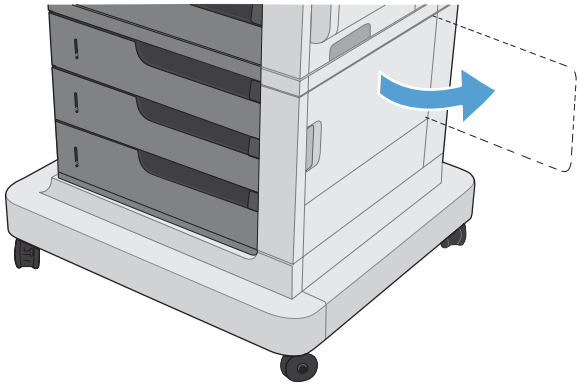

2. If paper is visible, gently pull the jammed paper up or down to remove it.

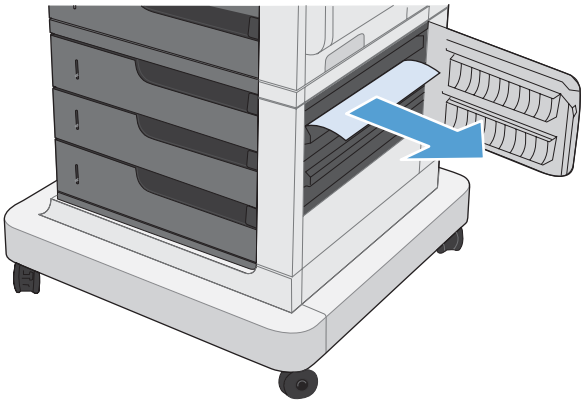

3. Close the lower right door.

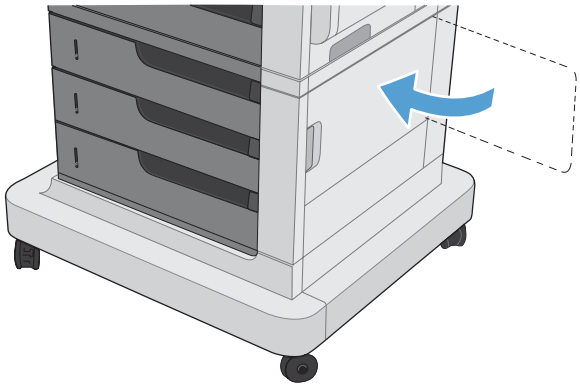

Jam causes and solutions

For locations of jam sensors, see Jam detection on page 55.

Jams in the output bin

Table 3-16 Causes and solutions for delivery delay jam

Cause	Solution
The output-bin full sensor flag is damaged.	Replace the paper delivery assembly. See Delivery assembly on page 145. See Manual sensor test (special-mode test) on page 246 for troubleshooting information.
Poor contact of the output-bin full sensor connector.	Reconnect the connectors of the output-bin full sensor (SR6) (J47) to DCC PCA (J123).
The output bin full sensor (SR6) is defective.	Check the output bin full sensor (SR6) using the manual sensor test. See Manual sensor test (special-mode test) on page 246. The output bin full sensor is letter F in the sensor test. Toggle the sensor to determine if the value changes for "F". If the value does not change, replace the sensor.
Poor contact of the fuser-motor (M2) connector.	Reconnect the connectors of the fuser motor (J117), (J15), and the DC controller PCA (J105).
The fuser motor (M2) is defective.	Execute the fuser-motor driving test in the actuator-drive mode. If the motor is defective, replace the fuser motor (M2).

Jams in the fuser and transfer area

Table 3-17 Causes and solutions for fuser delivery delay jams

Cause	Solution
The fuser-delivery-sensor flag is damaged.	Replace the fuser. See Fuser on page 85.
Poor contact with the fuser-delivery connector.	Reconnect the connectors of the fuser-delivery sensor (J48) and the DC controller PCA (J127).
The fuser-delivery sensor (SR5) is defective.	Check the fuser-delivery sensor (SR5) with the manual sensor test. See Manual sensor test (special-mode test) on page 246. If the sensor is defective, replace the sensor.

Table 3-18 Causes and solutions for wrapping jams

Cause	Solution
The fuser roller or pressure roller is dirty.	Create and use a cleaning page. See Cleaning page on page 306.
The guide of the fuser delivery unit is dirty.	Clean the guide.
The fuser roller or the pressure roller is worn or deformed.	Replace the fuser. See Fuser on page 85.
The lever for the output bin full sensor on the face-down tray is set incorrectly or is damaged.	Set the lever correctly. If the lever is damaged, replace the delivery assembly. See Delivery assembly on page 145.
The spring on the lever for the output bin full sensor on the face-down tray is unhooked.	Reattached the spring.

Table 3-18 Causes and solutions for wrapping jams (continued)

Cause	Solution
The output bin full sensor on the face-down tray has a poor connection.	Reconnect connector (J47) on the output bin full sensor and (J128) on the DC controller PCA.
The output bin full sensor is defective.	Run the manual sensor test to verify the output bin full sensor is functioning properly. See F output bin full sensor on page 251. If not, replace the sensor.

Table 3-19 Causes and solutions for fuser delivery stationary jams

Cause	Solution
The fuser roller or pressure roller is worn or deformed.	Replace the fuser. See Fuser on page 85.
The fuser-delivery roller is deformed.	
The gear of the fuser-delivery roller is damaged.	
The fuser-delivery sensor flag is stuck or broken.	Check the flag to make sure it moves correctly. See Manual sensor test (special-mode test) on page 246 for information. If the flag is damaged, replace the fuser. See Fuser on page 85.
Poor contact of the fuser-delivery sensor connector.	Reconnect connector (J48) of the fuser-delivery sensor and connector (J127) on the DC controller PCA.
The fuser delivery sensor (SR5) is defective.	Run the sensor test in the sensor monitor mode to verify that the fuser delivery sensor is functioning properly. If it is not, replace the fuser delivery sensor (SR5).

Table 3-20 Causes and solutions for residual media jams

Cause	Solution
The sensor detecting a residual media jam is not working.	One of the four sensors is reporting a residual jam. Test each sensor using the manual sensor test. See Manual sensor test (special-mode test) on page 246 for information. If the sensor does not respond, replace the component indicated: • TOP sensor (SR20): Replace the registration assembly. See Registration assembly on page 128. • Fuser delivery sensor (SR5): Replace the sensor. See callout 3 in Figure 2-114 Remove the delivery assembly (2 of 7) on page 146 for the sensor location. • Loop sensor 1 or 2 (SR14 and SR15): Replace the fuser. See Fuser on page 85. • Duplex re-pickup sensor (SR22): Replace the registration assembly. See Registration assembly on page 128.
If service was recently performed on the product, a sensor connector might be disconnected.	Run the manual sensor tests to verify which sensor detects the media. See Manual sensor test (special-mode test) on page 246 for information. Reconnect the corresponding sensor connector: • TOP sensor: Connector (J74) and (J145) on the DC controller PCA • Fuser delivery sensor: Connector (J48) and connector (J127) on the DC controller PCA • Loop sensor 1 or 2: Connector (J162) on the DC controller PCA • Duplex re-pickup sensor: Intermediate connector (J74) and connector (J145) on the DC controller PCA.

Table 3-21 Causes and solutions for pickup delay jams 2

Cause	Solution
Poor contact of the pickup motor drive connector.	Reconnect the connector (J37) of the pickup motor and connector (J260) of the DC controller PCA .
The pickup motor is defective.	Execute the pickup-motor driving test in the actuator-drive mode. If the motor is defective, replace the pickup motor. See Pickup motor on page 172.
The pickup roller is worn or deformed.	Replace the pickup roller. See Feed and separation rollers (Trays 2-5) on page 86.
The tray 2 separation roller is worn or deformed.	Replace the separation roller. See Feed and separation rollers (Trays 2-5) on page 86.
Poor contact of the TOP sensor connector.	Reconnect the intermediate connector (J74) of the TOP sensor and connector (J145) on the DC controller PCA.
The TOP sensor (SR20) is defective.	Run the manual sensor test to verify that the TOP sensor is functioning properly. See Manual sensor test (special-mode test) on page 246 for information. If it is not, replace the registration assembly. See Registration assembly on page 128.
Poor contact of the pickup solenoid drive connector.	Reconnect the connector (J59) of the pickup solenoid and (J115) on the DC controller PCA.

Table 3-21 Causes and solutions for pickup delay jams 2 (continued)

Cause	Solution
The pickup solenoid is defective.	Run the solenoid drive test in the actuator drive mode to verify that the pickup solenoid is functioning properly. If it is not, replace the tray-pickup drive assembly. See Tray-pickup drive assembly on page 178.
The pickup motor is defective.	Run the pickup motor drive test in the actuator drive mode to verify that the pickup motor is functioning properly. If it is not, replace the pickup motor. See Pickup motor on page 172.

Table 3-22 Causes and solutions for pickup stationary jams

Cause	Solution
Multiple-feed of media	If the tray 2 pickup roller or separation roller are worn or deformed, replace any defective parts. If the tray 1 pickup roller or separation pad are worn or deformed, replace any defective parts.
The TOP sensor lever is set incorrectly or damaged	Check the sensor lever to make sure it is set correctly. If it is damaged, replace the registration assembly. See Registration assembly on page 128.
The spring of the TOP sensor lever is unhooked.	Check the spring and place it in correct position.
Poor contact of the TOP sensor connector	Reconnect intermediate connector (J74) of the TOP sensor and connector (J145) on the DC controller PCA.
The TOP sensor is defective.	Run the manual sensor test to verify that the TOP sensor (SR20) is functioning properly. See Manual sensor test (special-mode test) on page 246 for information. If it is not, replace the registration assembly. See Registration assembly on page 128.

Jams in the duplex area (HP Color LaserJet CP4525dn, HP Color LaserJet CP4025dn, and HP Color LaserJet CP4525xh only)

Table 3-23 Causes and solutions for duplexing reverse jams

Cause	Solution
The duplex reverse roller is worn or deformed.	Replace the delivery assembly. See Delivery assembly on page 145.
The duplex feed roller is worn or deformed.	Replace the duplex feed unit.
Poor contact of the duplex reverse-motor connector	Reconnect the connectors (J39) of the duplex reverse motor, connectors (J202 and J201) on the high-voltage power supply (upper) PCA, and connector (J113) on the DC controller PCA.
The duplex reverse motor is defective.	Replace the duplex drive assembly. See Duplex-drive assembly on page 151.

Table 3-24 Causes and solutions for duplex repick jams

Cause	Solution
The duplex re-pickup sensor lever is set incorrectly or damaged.	Check the sensor lever to make sure it is set correctly. If it is damaged, replace the right door assembly. See Right-door assembly on page 113.
The spring of the duplex re-pickup sensor lever is unhooked.	Check the spring and place it in correct position.

Table 3-24 Causes and solutions for duplex repick jams (continued)

Cause	Solution
Poor contact of the duplex re-pickup sensor connector	Reconnect the intermediate connector (J74) and connector (J145) on the DC controller PCA.
The duplex re-pickup sensor (SR22) is defective.	Run the manual sensor test to verify that the duplex re-pickup sensor (SR22) is functioning properly. See Manual sensor test (special-mode test) on page 246 for information. If it is not, replace the right-door assembly. See Right-door assembly on page 113.
Poor contact of the duplex reverse solenoid connector	Reconnect the connector (J69) of the duplex reverse solenoid, connectors J202 and J201 on the high-voltage power supply (upper), and connector J113 on the DC controller PCA.
The duplex reverse solenoid is defective.	Replace the duplex-drive assembly. See Duplex-drive assembly on page 151.
The duplex flapper is damaged or malfunctioning.	Replace the delivery assembly. See Delivery assembly on page 145.
Poor contact of the duplex reverse solenoid connector	Reconnect the connector (J69) of the duplex reverse solenoid, connectors (J202) and (J201) on the high-voltage power supply (upper), and connector (J113) on the DC controller PCA.
The duplex reverse solenoid is defective.	Replace the duplex-drive assembly. See Duplex-drive assembly on page 151.
The duplex flapper is damaged or malfunctioning.	Replace the delivery assembly. See Delivery assembly on page 145.
The duplex repick roller is worn or damaged.	Replace the registration assembly. See Registration assembly on page 128.
Poor contact of the duplex repick clutch connector.	Reconnect the intermediate connector (J74) of the duplex repick clutch and connector (J145) on the DC controller PCA.
The duplex repick clutch is defective.	Run the solenoid drive test in actuator drive mode to verify that the duplex repick clutch is functioning properly. If it is not, replace the registration assembly. See Registration assembly on page 128.

Table 3-25 Causes and solutions for residual media jams

Cause	Solution
Poor contact of the loop-sensor connector and loop sensor 1 and 2.	Reconnect the connectors of the loop 1 sensor (1 and 2): • Loop 1 (J11, J352, J350, J50) and the DC controller (J139) • Loop 2 (J10, J352, J350, J50) and the DC controller (J139)
The loop sensor is defective.	Run the manual sensor test. See Manual sensor test (special-mode test) on page 246 for information. If the sensor is defective, replace fuser. See Fuser on page 85.
The spring of the fuser-delivery-sensor lever is unhooked.	Check the spring of the fuser and right door and place it in the correct position.
The fuser-delivery sensor lever is damaged.	Replace the sensor (SR5).
Poor contact of the fuser-delivery sensor connector.	Reconnect the connectors of the fuser-delivery sensor (J46), intermediate (J95) and the DC controller PCA (J123).
The fuser-delivery sensor is defective.	Run the manual sensor test to make sure the fuser-delivery sensor is functioning properly. See Manual sensor test (special-mode test) on page 246 for information. If the sensor is defective, replace the fuser. See Fuser on page 85.

Table 3-25 Causes and solutions for residual media jams (continued)

Cause	Solution
The spring of the duplex repickup sensor lever is unhooked.	Check the spring and place it in the correct position. The sensor is located in the right door behind the cover close to the engine side.
The duplex pickup sensor lever is damaged.	Replace the right door assembly. See Right-door assembly on page 113.
Poor contact of the duplexing media-reverse-sensor connector	Reconnect the connectors of the duplexing media-reverse sensor (J8) and (J90) and the duplexing driver PCA (J107).
The duplex repickup sensor (SR22) is defective.	Run the manual sensor test to verify that the duplex repickup sensor is functioning properly. See Manual sensor test (special-mode test) on page 246 for information. If the sensor is defective, replace the duplex repickup sensor.

NOTE: Even if jammed paper is visible in Tray 1, clear the jam from the inside of the product by opening the right door.

Jams in Tray 1, Tray 2 and internal paper path

Table 3-26 Causes and solutions for pickup delay jam 1: tray pickup

Cause	Solution
The tray 1 pick up roller or the tray 1 separation pad is worn or deformed.	Replace the tray 1 pickup roller and separation pad. See Pickup roller (Tray 1) on page 87. Replace the right door. See Right-door assembly on page 113.
Poor contact of the tray 1 media-presence-sensor connector	Reconnect the connectors of the tray media-feed sensor (J7), intermediate (J85), and DC controller (J107).
Poor contact of the TOP sensor connector.	Reconnect the intermediate connector (J74) of the TOP sensor and connector (J145) on the DC controller PCA.
The TOP sensor is defective.	Run the manual sensor test to verify that the TOP sensor is functioning properly. If not, replace the registration assembly. See Registration assembly on page 128.
Poor contact of the MP-pickup-solenoid drive connector	Reconnect the connector of the tray pickup solenoid (J52) and the DC controller PCA (J148).
The MP-pickup solenoid is defective.	Execute the tray-pickup-solenoid driving test in the actuator-drive mode. If the solenoid is defective, replace the right door assembly. See Right-door assembly on page 113.
Poor contact of the pickup-motor drive connector (M13)	Reconnect the connector (J37) and connector (J260) on the DC controller PCA.
The pickup motor is defective.	Execute the pickup-motor driving test in the actuator-drive mode. If the motor is defective, replace the pickup motor. See Pickup motor on page 172.

Table 3-27 Causes and solutions for pickup stationary jams

Cause	Solution
Multiple feed of media	Replace any worn or deformed parts (tray separation pad, tray feed roller, MP tray pickup roller or MP tray separation pad). If replacing the MP tray separation pad, you must replace the right door assembly. See Right-door assembly on page 113. Check the separation pad and MP tray separation pad to see if they are firmly seated and coupled with the torque limiter. Replace the separation pad and feed roller for Tray 2 and Tray 3. If the MP tray pickup roller if defective, replace the roller. See Pickup roller (Tray 1) on page 87. If the MP tray separation pad is defective, replace the right door assembly. See Right-door assembly on page 113.
The secondary transfer roller is not set correctly.	Place the secondary-transfer-roller unit in the correct position.
The secondary-transfer roller is worn or deformed.	Replace the secondary-transfer-roller assembly. See Secondary transfer assembly on page 119.
Poor contact of the drum 3 drive connector	Reconnect the connectors of the ITB motor (J42) and the DC controller PCA (J121).
The drum motor 3 is defective.	Execute the drum 3 driving test in the actuator-drive mode. If the motor is defective, replace the ITB motor.
The ITB does not rotate smoothly.	Replace the ITB. See Intermediate transfer belt (ITB) on page 92.

Jams in Tray 3, 4, and 5

Table 3-28 Causes and solutions for pickup delay and pickup stationary jams

Cause	Solution
The paper-feeder pickup roller is worn or deformed.	Replace the pickup roller. See Feed and separation rollers (Trays 2-5) on page 86.
The paper-feeder separation roller is worn or deformed.	Replace the separation roller. See Feed and separation rollers (Trays 2-5) on page 86.
The paper-feeder feed roller is worn or deformed.	Replace the feed roller. See Feed and separation rollers (Trays 2-5) on page 86.
Poor contact of the paper-feeder media-feed sensor connector (1, 2, or 3)	• Tray 3: Reconnect connectors (J408) and (J13) • Tray 4: Reconnect connectors (J406) and (J22) • Tray 5: Reconnect connectors (J403) and (J32)
A tray feed sensor is defective.	Run the manual sensor test to verify that the paper-feeder media feed sensor is functioning properly. See Manual sensor test 2 (special-mode test) on page 259 for information. If it is not, replace the pickup assembly of the specific tray. See Pickup assembly (optional paper feeder) on page 226.
Poor contact of a paper-feeder pickup solenoid drive connector (1, 2, or 3)	• Tray 3: Reconnect connectors (J408) and (J18) • Tray 4: Reconnect connectors (J406) and (J20) • Tray 5: Reconnect connectors (J403) and (J30)

Table 3-28 Causes and solutions for pickup delay and pickup stationary jams (continued)

Cause	Solution
The paper-feeder pickup solenoid is defective.	Run the solenoid drive test in the actuator drive mode to verify that the paper-feeder pickup solenoid is functioning properly. If it is not, replace the pickup assembly of the specific tray. See Pickup assembly (optional paper feeder) on page 226.
Poor contact of paper-feeder pickup motor drive connector.	Reconnect the connector (J409) on the paper feeder driver PCA and connector (J14).
The paper-feeder pickup motor is defective.	Run the pickup motor drive test in the actuator drive mode to verify that the paper-feeder pickup motor is functioning properly. If it is not, replace the pickup assembly of the specific tray. See Pickup assembly (optional paper feeder) on page 226.
Multiple feed of media	If the tray 3 pickup roller, separation roller, or feed roller is worn or deformed, replace any defective parts. See Feed and separation rollers (Trays 2-5) on page 86.
The paper-feeder media-feed sensor lever is set incorrectly or damaged.	Check the sensor lever to make sure it is set correctly. If it is damaged, replace the paper-feeder assembly.
The spring of the paper-feeder media-feed sensor lever is unhooked.	Check the spring and place it in correct position.
Poor contact of the paper-feeder media-feed sensor connector.	Reconnect the connector (J406) on the connector PCA and connector (J22) of the paper-feeder media feed sensor.
A tray feed sensor is defective.	Run the manual sensor test to verify that the tray feed sensor is functioning properly. See Manual sensor test 2 (special-mode test) on page 259 for information. If it is not, replace the pickup assembly of the specific tray. See Pickup assembly (optional paper feeder) on page 226.

Table 3-29 Causes and solutions for residual media jams

Cause	Solution
The sensor that detects residual paper jams is set incorrectly or damaged.	Run the manual sensor test to verify which sensor detects the paper. See Manual sensor test 2 (special-mode test) on page 259 for information. Check the sensor lever to make sure it is set correctly. If it is damaged, replace the corresponding pickup assembly. See Pickup assembly (optional paper feeder) on page 226.
The spring of the sensor lever that detects residual paper jams is unhooked.	Run the manual sensor test to verify which sensor detects the paper. See Manual sensor test 2 (special-mode test) on page 259 for information. Check the spring of the sensor lever to make sure it is set correctly.
Poor contact exists in the sensor that detects residual paper jams.	Run the manual sensor test to verify which sensor detects the paper. See Manual sensor test 2 (special-mode test) on page 259 for information. Reconnect the following corresponding sensor connectors: • Tray 3: Reconnect connectors (J408) and (J13) • Tray 4: Reconnect connectors (J406) and (J22) • Tray 5: Reconnect connectors (J403) and (J32)
The sensor that detects residual paper jams is defective.	Run the sensor test in the sensor monitor mode to verify which sensor detects the paper. Replace media feed sensor 1, 2 or 3.

Change jam recovery

This product provides a jam recovery feature that reprints jammed pages. The following options are available:

- **AUTO** — The product attempts to reprint jammed pages when enough memory is available. This is the default setting.
- **OFF** — The product does not try to reprint jammed pages. Because no memory is used to store the most recent pages, performance is optimal.

  NOTE: When using this option, if the product runs out of paper and the job is being printed on both sides, some pages can be lost.

- **ON** — The product always reprints jammed pages. Additional memory is allocated to store the last few pages printed. This might cause overall performance to suffer.

Set the jam recovery feature

1. Press the Home button ⌂.
2. Press the down arrow ▼ to highlight the **CONFIGURE DEVICE** menu, and then press the OK button.
3. Press the down arrow ▼ to highlight the **SYSTEM SETUP** menu, and then press the OK button.
4. Press the down arrow ▼ to highlight the **JAM RECOVERY** menu, and then press the OK button.
5. Press the down arrow or up arrow ▼/▲ to highlight the appropriate setting, and then press the OK button.
6. Press the Home button ⌂ to return to the **Ready** state.

Solve paper-handling problems

Product feeds multiple sheets

Product feeds multiple sheets

Cause	Solution
The input tray is overfilled. Open the tray and verify that the paper stack is below the maximum stack height mark.	Remove excess paper from the input tray.
Print paper is sticking together.	Remove paper, flex it, rotate it 180 degrees or flip it over, and then reload it into the tray. **NOTE:** Do not fan paper. Fanning can cause static electricity, which can cause paper to stick together.
Paper does not meet the specifications for this product.	Use only paper that meets HP paper specifications for this product.
Trays are not properly adjusted.	Make sure that the paper guides match the size of paper being used.
Tray 2 feeds multiple sheets.	Make sure Tray 2 is not overfilled. Open the tray and verify that the paper stack is below the maximum stack height mark. Remove paper from Tray 2 to avoid jams.

Product feeds incorrect page size

Product feeds incorrect page size

Cause	Solution
The correct size paper is not loaded in the tray.	Load the correct size paper in the tray.
The correct size paper is not selected in the software program or printer driver.	Confirm that the settings in the software program and printer driver are correct, because the software program settings override the printer driver and control panel settings, and the printer driver settings override the control panel settings.
The correct size paper for the tray is not selected in the product control panel.	From the control panel, select the correct size paper for the tray.
The paper size is not configured correctly for the tray.	Print a configuration page or use the control panel to determine the paper size for which the tray is configured.
The guides in the tray are not against the paper.	Verify that the paper guides are touching the paper.

Product pulls from incorrect tray

Product pulls from incorrect tray

Cause	Solution
You are using a driver for a different product.	Use a driver for this product.
The specified tray is empty.	Load paper in the specified tray.

Product pulls from incorrect tray

Cause	Solution
The paper size is not configured correctly for the input tray.	Print a configuration page or use the control panel to determine the paper size for which the tray is configured.
The guides in the tray are not against the paper.	Verify that the guides are touching the paper.

Paper does not feed automatically

Paper does not feed automatically

Cause	Solution
Manual feed is selected in the software program.	Load Tray 1 with paper, or, if the paper is loaded, press the checkmark button ✓.
The correct size paper is not loaded.	Load the correct size paper.
The input tray is empty.	Load paper into the input tray.
Paper from a previous jam has not been completely removed.	Open the product and remove any paper in the paper path.
The paper size is not configured correctly for the input tray.	Print a configuration page or use the control panel to determine the paper size for which the tray is configured.
The guides in the tray are not against the paper.	Verify that the rear and width paper guides are touching the paper.
The manual-feed prompt is set to **ALWAYS**. The product always prompts for manual feed, even if the tray is loaded.	Open the tray, reload the media, and then close the tray. Or, change the manual-feed prompt setting to **UNLESS LOADED**, so that the product prompts for manual feed only when the tray is empty.
The **USE REQUESTED TRAY** setting on the product is set to **EXCLUSIVELY**, and the requested tray is empty. The product will not use another tray.	Load the requested tray. Or, change the setting from **EXCLUSIVELY** to **FIRST** on the **CONFIGURE DEVICE** menu. The product can use other trays if no media is loaded in the specified tray.

Paper does not feed from Tray 2, 3, 4, or 5

Paper does not feed from Tray 2, 3, 4, or 5

Cause	Solution
The correct size paper is not loaded.	Load the correct size paper.
The input tray is empty.	Load paper in the input tray.
The correct paper type for the input tray is not selected in the product control panel.	From the product control panel, select the correct paper type for the input tray. Trays configured for a paper type with a specific weight range will not match a print job that specifies an exact weight, even if the specified weight is within the weight range.
Paper from a previous jam has not been completely removed.	Open the product and remove any paper in the paper path. Closely inspect the fuser area for jams.

Paper does not feed from Tray 2, 3, 4, or 5

Cause	Solution
None of the optional trays appear as input tray options.	The optional trays only display as available if they are installed. Verify that any optional trays are correctly installed. Verify that the printer driver has been configured to recognize the optional trays.
An optional tray is incorrectly installed.	Print a configuration page to confirm that the optional tray is installed. If not, verify that the tray is correctly attached to the product.
The paper size is not configured correctly for the input tray.	Print a configuration page or use the control panel to determine the paper size for which the tray is configured.
The guides in the tray are not against the paper.	Verify that the guides are touching the paper.

Transparencies or glossy paper will not feed

Transparencies or glossy paper will not feed

Cause	Solution
The correct paper type is not specified in the software or printer driver.	Verify that the correct paper type is selected in the software or printer driver.
The input tray is overfilled.	Remove excess paper from the input tray. Do not exceed the maximum stack height marks for the tray.
Paper in another input tray is the same size as the transparencies, and the product is defaulting to the other tray.	Make sure that the input tray containing the transparencies or glossy paper is selected in the software program or printer driver. Use the product control panel to configure the tray to the paper type loaded.
The tray containing the transparencies or glossy paper is not configured correctly for type.	Make sure that the input tray containing the transparencies or glossy paper is selected in the software program or printer driver. Use the product control panel to configure the tray to the paper type loaded.
Transparencies or glossy paper might not meet supported paper specifications.	Use only paper that meets the HP paper specifications for this product.
High-humidity environments may cause glossy paper not to feed, or to feed too many sheets.	Avoid printing glossy paper in high humidity conditions. When printing glossy paper, removing the paper from the wrapper and letting it rest for a few hours can improve feeding into the product. However, letting paper rest in humid environments may also cause blisters.

Envelopes jam or will not feed in the product

Envelopes jam or will not feed in the product

Cause	Solution
Envelopes are loaded in an unsupported tray. Only Tray 1 can feed envelopes.	Load envelopes into Tray 1.
Envelopes are curled or damaged.	Try using different envelopes. Store envelopes in a controlled environment.

Envelopes jam or will not feed in the product

Cause	Solution
Envelopes are sealing because the moisture content is too high.	Try using different envelopes. Store envelopes in a controlled environment.
Envelope orientation is incorrect.	Verify that the envelope is loaded correctly.
This product does not support the envelopes being used.	Refer to the *HP LaserJet Printer Family Print Media Guide*.
Tray 1 is configured for a size other than envelopes.	Configure Tray 1 size for envelopes.

Output is curled or wrinkled

Output is curled or wrinkled

Cause	Solution
Paper does not meet the specifications for this product.	Use only paper that meets the HP paper specifications for this product.
Paper is damaged or in poor condition.	Remove paper from the input tray and load paper that is in good condition.
Product is operating in an excessively humid environment.	Verify that the printing environment is within humidity specifications.
You are printing large, solid-filled areas.	Large, solid-filled areas can cause excessive curl. Try using a different pattern.
Paper used was not stored correctly and might have absorbed moisture.	Remove paper and replace it with paper from a fresh, unopened package.
Paper has poorly cut edges.	Remove paper, flex it, rotate it 180 degrees or turn it over, and then reload it into the input tray. Do not fan paper. If the problem persists, replace the paper.
The specific paper type was not configured for the tray or selected in the software.	Configure the software for the paper (see the software documentation). Configure the tray for the paper.
The paper has previously been used for a print job.	Do not re-use paper.

Product will not duplex or duplexes incorrectly

Product will not duplex (print 2-sided jobs) or duplexes incorrectly

Cause	Solution
You are trying to duplex on unsupported paper.	Verify that the paper is supported for duplex printing.
The printer driver is not set up for duplex printing.	Set up the printer driver to enable duplex printing.
The first page is printing on the back of preprinted forms or letterhead.	Load preprinted forms and letterhead in Tray 1 with the letterhead or printed side down, with the top of the page leading into the product. For Tray 2 and 3, load the paper printed side up with the top of the page toward the right of the product.

Product will not duplex (print 2-sided jobs) or duplexes incorrectly

Cause	Solution
The product model does not support automatic 2-sided printing.	The HP Color LaserJet CP4525 and HP Color LaserJet CP4525n models do not support automatic 2-sided printing.
The product configuration is not set for duplexing.	In Windows, run the automatic configuration feature: 1. Click the **Start** button, point to **Settings**, and then click **Printers** (for Windows 2000) or **Printers and Faxes** (for Windows XP). 2. Right-click the HP product icon, and then click **Properties** or **Printing Preferences**. 3. Click the **Device Settings** tab. 4. Under **Installable Options**, click **Update Now** in the **Automatic Configuration** list.

Use manual print modes

Try the following multi-purpose (MP) modes to see if they solve the image-quality problems. These options can be found in the **ADJUST PAPER TYPES** and **OPTIMIZE** submenus under the **PRINT QUALITY** menu on the control panel.

Table 3-30 MP modes under the ADJUST PAPER TYPES sub menu

PRINT MODE	• **AUTOSENSE MODE** • **NORMAL MODE** • **LIGHT MODE** • **LIGHT ROUGH MODE** • **HEAVY MODE** • **EXTRA HEAVY MODE** • **CARDSTOCK MODE** • **HEAVYGLOSSY MODE** • **X-HVYGLOSSY MODE** • **CARD GLOSSY MODE** • **ROUGH MODE** • **TRANSPARENCY MODE** • **4MM TRNS MODE** • **TRANSPARENCY2 MODE** • **TOUGH MODE** • **LABEL MODE** • **ENVELOPE MODE** **NOTE:** Not all print modes are available for all paper types.
RESISTANCE MODE	Set to **UP** to resolve print-quality issues caused by poor secondary transfer in low-humidity environments with resistive or rough surface media.
HUMIDITY MODE	With glossy film, set to **HIGH** when the product is in a high-humidity environment and print-quality defects occur on HP Tough Paper or Opaque film. With transparencies, set to **HIGH** when the product is in a high-humidity environment and print-quality defects occur on color transparencies on the first page of a print job. With all other paper types, set to **HIGH** when the product is in a high-humidity environment and light density occurs on the first page of a print job.
PRE-ROTATION MODE	Set this feature to **ON** if horizontal banding occurs on pages.

Table 3-30 MP modes under the ADJUST PAPER TYPES sub menu (continued)

FUSER TEMP MODE	If you are seeing a faint image of the page repeated at the bottom of the page or on the following page, first make sure the Paper Type and Print Mode settings are correct for the type of paper you are using. If you continue to see ghost images on your print jobs, set the Fuser Temp feature to one of the Alternate settings . Try the **ALTERNATE 1** setting first and see if it solves the problem. If you continue to see the problem, try **ALTERNATE 2** and then **ALTERNATE 3**. Using the **ALTERNATE 2** and **ALTERNATE 3** settings might cause an extra delay between jobs.
PAPER CURL MODE	Use in high-humidity and high-temperature environments. The **REDUCED** setting decreases fuser temperature and increases the interpage gap.

Table 3-31 MP modes under the OPTIMIZE submenu

NORMAL PAPER	Set to **SMOOTH** when printing on smooth paper of normal weight.
HEAVY PAPER	Set to **SMOOTH** when printing on smooth, heavy media types.
ENVELOPE MODE	Set to **REDUCED TEMP** if envelopes are sticking due to moisture in the envelop adhesive.
ENVIRONMENT	Set to **LOW TEMP** if the product is operating in a low-temperature environment and you are having problems with print quality such as blisters in the printed image.
LINE VOLTAGE	Set to **LOW VOLTAGE** if the product is operating in a low-voltage environment and you are having problems with print quality such as blisters in the printed image.
TRAY1	Set the mode to **ALTERNATE** if you are seeing marks on the back side of the paper when printing from Tray 1. This sets the product to initiate a clean sequence every time a job finishes when the product is set for **ANY SIZE** and **ANY TYPE** for Tray 1.
BACKGROUND	Set to **ALTERNATIVE 1** when a background occurs all over the page. Set to **ALTERNATIVE 2** when thin vertical lines appear on the page. Set to **ALTERNATIVE 3** when the other alternatives do not correct the problem.
UNIFORMITY CONTROL	Set to **ALTERNATIVE 1** to improve uniformity on any paper type. Set to **ALTERNATIVE 2** to improve uniformity on normal and light paper types. Set to **ALTERNATIVE 3** when the other alternatives do not correct the problem.
TRACKING CONTROL	Improves color stability by adjusting the bias voltage. Make sure this mode is set to **ON**.
REGISTRATION	Set to **ALTERNATIVE** when color misregistration occurs.
TRANSFER CONTROL	Set to **ALTERNATIVE 1** to reduce primary transfer bias and to resolve low density or blotchy images. Set to **ALTERNATIVE 2** to resolve ghosting outlines that look like a finger or fingers. Set to **ALTERNATIVE 3** when the other alternatives do not correct the problem.
PROCESS CLEANING PAGE	Generates and processes a fuser cleaning page for the dn printer and HP Color LaserJet CP4525xh printer only.

Solve image-quality problems

This section helps you define print-quality problems and what to do to correct them. Often print-quality problems can be handled easily by making sure that the product is maintained, using paper that meets HP specifications, or running a cleaning page.

Image defects table

The following examples depict letter-size paper that has passed through the product short-edge first. These examples illustrate problems that would affect all the pages that you print, whether you print in color or in black only. The topics that follow list the typical cause and solution for each of these examples.

Problem	Sample	Cause	Solution
Print is light or faded on entire page.		Poor contacts exist on the ITB unit and the product grounding unit.	Clean the grounding contacts. If the problem remains after cleaning, check the contacts for damage. Replace any deformed or damaged parts.
		Poor secondary transfer contacts exist on the secondary transfer roller and the ITB.	Clean the contacts. If the problem remains after cleaning, check the contacts for damage. Replace any deformed or damaged parts.
Print is light or faded in a particular color.		Poor primary transfer bias contacts on the ITB unit and product.	Clean the contacts of the color that produces the light print. If the problem remains after cleaning, check the contacts for damage. Replace any deformed or damaged parts.
		Poor primary charging bias contacts with the print cartridge and product.	
		Poor developing bias contacts with the print cartridge and product.	
Image is too dark.		The RD sensor is defective.	Replace the RD sensor. See Registration density (RD) sensor assembly on page 124.
Page is blank.	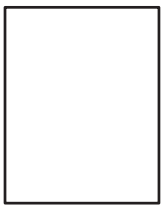	The high-voltage power-supply lower is defective (no developing bias output).	Replace the high-voltage power-supply lower. See High-voltage power supply lower (HVPS-D) on page 163.

Problem	Sample	Cause	Solution
The page is all black or a solid color.		Poor contact exists in the primary charging bias or developing bias contacts between the print cartridge and the product.	Clean each contact of the color that produces the all black or solid color. If the problem remains after cleaning, check the contacts for damage. Replace any deformed or damaged parts. Replace the affected print cartridge.
White spots appear in an image	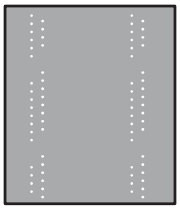	The primary transfer roller is deformed or has deteriorated.	Replace the ITB. See Intermediate transfer belt (ITB) on page 92.
		The secondary transfer roller is deformed or has deteriorated.	Replace the secondary-transfer-roller. See Secondary transfer roller on page 90.
The back of the page is dirty.	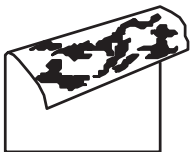	The secondary transfer roller is dirty.	Replace the secondary transfer roller. See Secondary transfer roller on page 90.
		The fuser inlet guide or separation guide is dirty.	Clean the dirty parts. If the dirt does not come off, replace the guide.
		The pressure roller is dirty.	Run the cleaning page several times. If the dirt does not come off, send a fuser cleaning kit. If the issue persists, replace the fuser. See Fuser on page 85.
Vertical streaks or bands appear on the page.	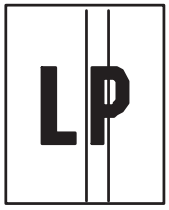	Scratches are present on the circumference of the photosensitive drum.	Replace the print cartridge of the color that matches the defect.
		Scratches are present on the circumference of the fuser roller.	Replace the fuser. See Fuser on page 85.
		Scratches are present on the circumference of the ITB.	Replace the ITB. See Intermediate transfer belt (ITB) on page 92.
		The ITB drive roller is deformed or has deteriorated.	
		The ITB cleaning mechanism is malfunctioning.	

Problem	Sample	Cause	Solution
Vertical white lines appear in a particular color.		The laser beam window is dirty.	Clean the window and remove any foreign substances.
		Scratches are present on the circumference of the developing cylinder or photosensitive drum. White scratch down the page could mean the scanner glass needs to be cleaned.	Remove the affected print cartridge and re-install. The PGCs will clean the glass. If the problem persists, replace the affected print cartridge.
		The laser/scanner-unit mirror is dirty.	Replace the laser/scanner assembly. See Laser/scanner assembly (Y/M) on page 186 or Laser/scanner assembly (C/Bk) on page 190.
Vertical white lines appear in all colors.	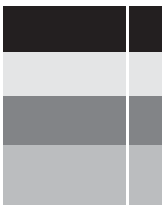	Horizontal scratches on the fuser roller.	Replace the fuser. See Fuser on page 85.
		Scratches are present on the circumference of the ITB. White scratch down the page could mean the scanner glass needs to be cleaned.	Remove the affected print cartridge and re-install. The PGCs will clean the glass. Replace the ITB. See Intermediate transfer belt (ITB) on page 92.
Horizontal lines appear on the page.		Repetitive horizontal lines appear.	Use the repetitive defects ruler to identify the dirty roller. Clean the roller. If the roller cannot be cleaned, replace the fuser. See Fuser on page 85.
		Horizontal scratches are present on the photosensitive drum.	Replace the print cartridge of the color that matches the defect.
		Horizontal scratches are present on the fuser roller.	Replace the fuser. See Fuser on page 85.
A horizontal white line appears on the page.	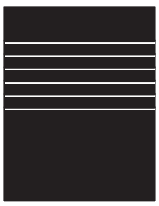	Repetitive horizontal white lines appear.	Use the repetitive defects ruler to identify the dirty roller. Clean the roller. If the roller cannot be cleaned, replace the roller.
		Horizontal scratches are present on the photosensitive drum.	Replace the print cartridge of the color that matches the defect.
		Scratches are present on the circumference of the ITB.	Replace the ITB. See Intermediate transfer belt (ITB) on page 92.

Problem	Sample	Cause	Solution
Image in a particular color does not print in the correct color.	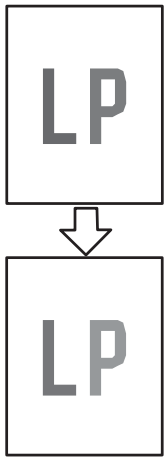	Poor contact exists in the primary charging bias or developing bias contacts between the print cartridge and the product.	Clean each contact of the color that produces the missing color. If the problem remains after cleaning, check the contacts for damage. Replace any deformed or damaged parts.
		The print cartridge (primary charging roller, developing roller, or photosensitive drum) is defective.	Replace the print cartridge of the color that matches the defect.
		The high-voltage power-supply lower is defective (no primary charging bias or developing bias output).	Replace the high-voltage power-supply lower. See High-voltage power supply lower (HVPS-D) on page 163.
		The laser/scanner unit is defective.	Replace the laser/scanner assembly. See Laser/scanner assembly (Y/M) on page 186 or Laser/scanner assembly (C/Bk) on page 190.
Dropouts appear.		The secondary transfer roller is deformed or has deteriorated.	Replace the secondary-transfer-roller. See Secondary transfer roller on page 90.
		The primary charging roller, developing roller, or photosensitive drum is deformed or has deteriorated.	Replace the print cartridge of the color that matches the defect.
		The fuser roller is deformed or has deteriorated.	Replace the fuser.
		The high-voltage power-supply T PCA is defective (no transfer bias output).	Replace the high-voltage power-supply upper. See High-voltage power supply upper (HVPS-T) on page 196.
The toner is not fully fused to the paper.		The fuser roller or pressure roller is scarred or deformed.	Replace the fuser. See Fuser on page 85.
		The thermistor is defective.	Replace the fuser. See Fuser on page 85.
		The fuser heater is defective.	

Problem	Sample	Cause	Solution
Some color is misregistered.		The product is incorrectly calibrated.	Calibrate the product.
		The ITB unit is defective.	If the ITB does not rotate smoothly or a cleaning malfunction occurs (ITB is dirty), replace the ITB. See Intermediate transfer belt (ITB) on page 92.
		The drive gear of the ITB motor is worn or chipped.	Check each drive gear between the ITB drive roller and the ITB motor. If the gear is worn or chipped, replace the drive unit.
		The RD sensor is defective.	Open and close the front door several times to clean the RD sensor. If the problem persists, replace the RD sensor. See Registration density (RD) sensor assembly on page 124.
		The laser/scanner unit is defective.	Replace the laser/scanner assembly. See Laser/scanner assembly (Y/M) on page 186 or Laser/scanner assembly (C/Bk) on page 190.
		The print cartridge is defective.	Replace the print cartridge of the affected color.
Toner smears appear on the media.	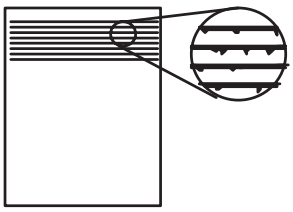	The product has residual media.	Remove the residual media.
		The fuser inlet guide is dirty.	Clean the fuser inlet guide.
The printed page contains misformed characters.		The product is experiencing page skew.	See the “Text or graphics are skewed on the printed page” row in this table.
		The laser/scanner unit is defective.	Replace the laser/scanner assembly. See Laser/scanner assembly (Y/M) on page 186 or Laser/scanner assembly (C/Bk) on page 190.
Text or graphics are skewed on the printed page.		The registration shutter spring is unhooked.	Check the spring and place it in the correct position.
		The registration shutter spring is deformed.	Replace the secondary transfer assembly. See Secondary transfer assembly on page 119.

Problem	Sample	Cause	Solution
The printed page contains wrinkles or creases.	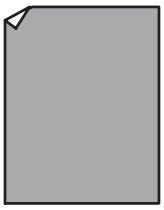	The roller or media feed guide is dirty.	Clean any dirty components.
		A feed roller is deformed or has deteriorated.	Replace any deformed or deteriorated rollers.
		The paper feed guide is damaged.	Replace the paper-feed-guide unit.
The front of the page is dirty.		The photosensitive drum is dirty.	Replace the print cartridge.
		The fuser roller or pressure roller is dirty.	Execute a **Pressure roller clean mode**. If the dirt does not come off, replace the fuser. See Fuser on page 85. **NOTE:** Cleaning the fuser with HP tough paper provides better results than with plain paper. You might need to execute the cleaning process several times to remove all contaminates on the fuser.
Repetitive horizontal lines			See repetitive image defect ruler. Clean the indicated roller. If the contaminate does not come off, replace appropriate roller or assembly.
Pages have flecks of toner	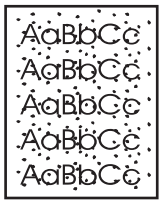		Execute a cleaning page to clean the contaminate off the fuser. The cleaning page may need to be run several time to clean the fuser. Do not replace the fuser. **NOTE:** Cleaning the fuser with HP tough paper provides better results than with plain paper. You might need to execute the cleaning process several times to remove all contaminates on the fuser.
Pages have one or more skewed color planes (can appear on the right or left side of the page)	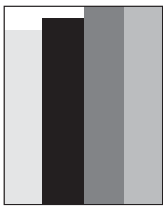		Remove, and then reinstall the print cartridge associated with the defect.

Clean the product

Over time, particles of toner and paper accumulate inside the product. This can cause print-quality problems during printing. Cleaning the product eliminates or reduces these problems.

Clean the paper path and print-cartridge areas every time that you change the print cartridge or whenever print-quality problems occur. As much as possible, keep the product free from dust and debris.

Clean the product

1. Turn the product off and then unplug the power cord and all interface cables.
2. Use a soft, water-moistened cloth to remove marks or spots from the surface of the product. Wipe the surface with a soft, dry cloth.

△ **CAUTION:** Do not touch the ITB belt or the spongy surfaces of rollers. Skin oils and fingerprints can cause print quality problems.

Clean the paper path

1. Press the Home button ⌂.
2. Press the up arrow or down arrow ▲/▼ to highlight the **CONFIGURE DEVICE** menu, and then press the OK button.
3. Press the up arrow or down arrow ▲/▼ to highlight the **PRINT QUALITY** menu, and then press the OK button.
4. If the product has automatic two-sided printing, go to step 5.

   If the product does not have automatic two-sided printing, press the up arrow or down arrow ▲/▼ to highlight the **CREATE CLEANING PAGE** option, and then press the OK button. Follow the instructions on the printed page.
5. Press the up arrow or down arrow ▲/▼ to highlight the **PROCESS CLEANING PAGE** option, and then press the OK button. The cleaning process takes several minutes.
6. Discard the printed page. The task is complete.

Solve performance problems

Problem	Cause	Solution
Pages print but are totally blank.	The document might contain blank pages.	Check the document that you are printing to see if content appears on all of the pages.
	The product might be malfunctioning.	To check the product, print a Configuration page.
Pages print very slowly.	Heavier paper types can slow the print job.	Print on a different type of paper.
	Complex pages can print slowly.	Proper fusing may require a slower print speed to ensure the best print quality.
	Large batches, narrow paper, and special paper such as gloss, transparency, cardstock, and HP Tough Paper can slow the print job.	Print in smaller batches, on a different type of paper, or on a different size of paper.
Pages did not print.	The product might not be pulling paper correctly.	Make sure paper is loaded in the tray correctly.
	The paper is jamming in the product.	Clear the jam. See Clear paper jams on page 383.
	The USB cable might be defective or incorrectly connected.	• Disconnect the USB cable at both ends and reconnect it. • Try printing a job that has printed in the past. • Try using a different USB cable.
	Other devices are running on your computer.	The product might not share a USB port. If you have an external hard drive or network switchbox that is connected to the same port as the product, the other device might be interfering. To connect and use the product, you must disconnect the other device or you must use two USB ports on the computer.

Solve connectivity problems

Solve direct-connect problems

If you have connected the product directly to a computer, check the cable.

- Verify that the cable is connected to the computer and to the product.
- Verify that the cable is not longer than 2 meters (6 feet). Replace the cable if necessary.
- Verify that the cable is working correctly by connecting it to another product. Replace the cable if necessary.

Solve network problems

Check the following items to verify that the product is communicating with the network. Before beginning, print a configuration page. See Configuration page on page 307.

1. Are there any physical connection problems between the workstation or file server and the product?

   Verify that the network cabling, connections, and router configurations are correct. Verify that the network cable lengths meet network specifications.

2. Are your network cables connected properly?

   Make sure that the product is attached to the network using the appropriate port and cable. Check each cable connection to make sure it is secure and in the right place. If the problem continues, try a different cable or ports on the hub or transceiver. The amber activity light and the green link status light next to the port connection on the back of the product should be lit.

3. Are the link speed and duplex settings set correctly?

   Hewlett-Packard recommends leaving this setting in automatic mode (the default setting). See I/O menu on page 334.

4. Can you "ping" the product?

   Use the command prompt to ping the product from your computer. For example:

   ```
   ping 192.168.45.39
   ```

   Ensure that the ping displays round-trip times.

   If you are able to ping the product, verify that the IP address configuration for the product is correct on the computer. If it is correct, delete and then add the product again.

   If the ping command failed, verify that the network hubs are on, and then verify that the network settings, the product, and the computer are all configured for the same network.

5. Have any software applications been added to the network?

   Make sure they are compatible and that they are installed correctly with the correct printer drivers.

6. Are other users able to print?

   The problem may be workstation-specific. Check the workstation network drivers, printer drivers, and redirection (capture in Novell NetWare).

7. If other users are able to print, are they using the same network operating system?

Check your system for proper network operating system setup.

8. Is your protocol enabled?

   Check the status of your protocol on the Configuration page. You can also use the embedded Web server to check the status of other protocols. See the product user guide.

9. Does the product appear in HP Web Jetadmin or other management application?

   - Verify network settings on the Network configuration page.
   - Confirm the network settings for the product using the product control panel (for products with control panels).

Service mode functions

Service menu

The **SERVICE** menu is PIN-protected for added security. Only authorized service people have access to the **SERVICE** menu. When you select **SERVICE** from the list of menus, the product prompts you to enter an eight-digit PIN number. The PINs for the HP Color LaserJet Enterprise CP4020-CP4520 Series are 11402509 and 11452509.

1. Press the Home button.
2. Press the down arrow ▼ to highlight **SERVICE**, and then press the OK button.
3. Enter the eight-digit PIN using the alphanumeric keypad.
4. Press the OK button to enter the PIN and open the **SERVICE** menu.

The following menu items appear in the **SERVICE** menu:

CLEAR EVENT LOG	This menu item allows you to clear the event log.
CLEAR BOOTLOADER PASSWORD	This menu item allows you to clear the bootloader password if it has been lost.
TOTAL PAGE COUNT	The page count stored in NVRAM and displayed on the configuration page represents the number of pages that the formatter has formatted (engine test prints are not included in this number). If it becomes necessary to repair a product by installing a DC controller PCA, you must set the page count so that it represents the age of the print engine rather than the age of the DC controller PCA. When you press either the up arrow ▲ or down arrow ▼ to change the value of the first digit, the prompts are changed to indicate an acceptable range and the appropriate value.
MONO CYCLE COUNT	After replacing the formatter, use this item to reset the mono page count so that the figure continues to represent the page count for the product engine. The page count that is stored in NVRAM and printed on the configuration page represents the number of pages that the formatter has formatted (not including engine-test prints). If you install a new formatter when repairing a product, use this menu item to reset the page count to the previous value. In this way, the page count reflects the number of pages that the engine has printed rather than restarting the count for the new formatter. The page count is in two categories: total mono pages and total color pages.
COLOR CYCLE COUNT	After replacing the formatter, use this item to reset the color page count so that the figure continues to represent the page count for the product engine. The page count that is stored in NVRAM and printed on the configuration page represents the number of pages that the formatter has formatted (not including engine-test prints). If you install a new formatter when repairing a product, use this menu item to reset the page count to the previous value. In this way, the page count reflects the number of pages that the engine has printed rather than restarting the count for the new formatter. The page count is in two categories: total mono pages and total color pages.

REFURBISH PAGE COUNT	The number of pages a product is set to print when it is refurbished. The count is kept for legal purposes. If it becomes necessary to refurbish a product, you must be able to set the page count so that it represents the age of the print engine when it was refurbished. This menu item allows **SERVICE ID** to be reset after being refurbished, if total page count minus refurbish page count is less than 500. Without this menu item, **SERVICE ID** could not be reset, if the calculated page count was less than 500. When you press either the When you press either the up arrow▲ or down arrow ▼ to change the value of the first digit, the prompts are changed to indicate an acceptable range and the appropriate value.
REFURBISH CYCLE COUNT	Use this item to record the page count when the product was refurbished.
SERIAL NUMBER:	After replacing the formatter, use this item to reset the product serial number.

SERVICE ID	Use this item to show the date that the product was first used on the control panel. This eliminates the need for users to keep paper receipts for proof of warranty. **Restore the service ID** If you replace the formatter, the date is lost. Use this menu item to reset the date to the original date that the product was first used. The date format is YYDDD. Use the following formula to calculate the dates. The date 17-October-2002 is used as an example. 1. To calculate YY, subtract 1990 from the calendar year. For instance, if the product was first used in 2002, calculate YY as follows: 2002 - 1990 = 12. YY = 12. 2. Subtract 1 from 10 (October is the tenth month of the year): 10 - 1 = 9. ◦ Multiply 9 by 30: 9 x 30 = 270 or add 17 to 270: 270 + 17 = 287. Thus, DDD = 287. **Convert the service ID to an actual date** You can use the product Service ID number to determine whether the product is still under warranty. Use the following formula to convert the Service ID into the installation date as follows: 1. Add 1990 to YY to get the actual year that the product was installed. 2. Divide DDD by 30. If there is a remainder, add 1 to the result. This is the month. 3. The remainder from the calculation in step 2 is the date. Using the Service ID 12287 as an example, the date conversion is as follows: 1. 12 + 1990 = 2002, so the year is 2002. 2. 287 divided by 30 = 9 with a remainder of 17. Since there is a remainder, add 1 to 9 to get 10, which represents October. 3. The remainder in step 2 is 17, so that is the date. 4. The complete date is 17-October-2002. **NOTE:** A six-day grace period is built into the date system.
COLD RESET PAPER	When you perform a cold reset, the paper size that is stored in NVRAM is reset to the default factory setting. If you replace a formatter board in a country/region that uses A4 as the standard paper size, use this menu to reset the default paper size to A4. LETTER and A4 are the only available values.
NEW REGISTRATION ROLLER	Use after installing a new registration roller.
MEDIA SENSOR VALUE	Use this menu item to calibrate the media sensor by selecting a threshold value from a specified range. This calibration is most likely to occur when a media sensor has been replaced, but might also occur if the current sensor needs to be optimized. The recommended media sensor threshold value for each sensor is included in the replacement kit for the part.

Product resets

Restore factory-set defaults

The **RESETS** menu allows you to reset factory settings, and disable or enable sleep mode.

To display: Press the Home button 🏠, select the **CONFIGURE DEVICE** menu, and then select the **RESETS** menu.

Select **RESTORE FACTORY SETTINGS** from the submenu, and then press the OK button.

Hard disk initialization (optional)

A hard disk initialization will erase and reformat the product's hard disk. Perform hard disk initialization only if an error code displays on the control panel indicating a disk error. Always try initializing the hard disk before replacing it.

1. Turn the product on.
2. As the product performs its power-on sequence, press and hold the Home 🏠 button until all three lights on the control panel are lit.
3. Press the back arrow ⮌. The message **INITIALIZE DISC** displays on the control panel.
4. Press the down arrow ▼. The product initializes the hard disk and continues its power-on sequence.

NVRAM initialization

△ **CAUTION:** Initializing NVRAM resets the serial number, the event log, the page counts, the calibration settings, and the EIO card. Use the **SERVICE** menu to restore the serial number and page counts. You also need to reconfigure any computers that print to this product to recognize the product. Initialize NVRAM only when absolutely necessary. In most situations, use a cold reset to reset product variables but still retain the needed values in the **SERVICE** menu.

NOTE: Print a configuration page before initializing NVRAM.

From the configuration page and supplies status page, gather the following information:

- Total page count and color page count
- Serial number

1. Turn the product on and watch the control panel display.
2. When the display shows the memory count, press and hold the down arrow ▼ until all three lights on the control panel are lit.
3. Press the up arrow ▲.
4. Press the Home 🏠 button. The message **SKIP DISK LOAD** displays on the control panel.
5. Press the up arrow ▲ until **NVRAM INIT** is highlighted, and then press the OK button . The product initializes NVRAM and then continues its power-on sequence.

Product cold reset

Before beginning, print a configuration page and supplies status page. Use these pages to verify resets have occurred.

1. Press the Home button.
2. Press the down arrow ▼ to highlight the **CONFIGURE DEVICE** menu, and then press the OK button.
3. Press the down arrow ▼ to highlight the **RESET** menu, and then press the OK button.
4. Press the down arrow ▼ to highlight the **RESTORE FACTORY SETTINGS** menu, and then press the OK button.

Product updates

To download the most recent firmware upgrade for the product, go to www.hp.com/go/cljcp4025_firmware or www.hp.com/go/cljcp4525_firmware.

4 Parts and diagrams

- Order parts, accessories, and supplies
- Part numbers
- Screws
- How to use the parts lists and diagrams
- External covers, panels, and doors
- Right door assembly
- Front door assembly
- Internal components
- Assessories
- Alphabetical parts list
- Numerical parts list

Order parts, accessories, and supplies

You can obtain the following items directly from HP:

- **Replacement parts:** To order replacement parts in the U.S., go to www.hp.com/go/hpparts/. Outside the United States, order parts by contacting your local authorized HP service center.
- **Supplies and accessories:** To order supplies in the U.S., go to www.hp.com/go/ljsupplies. To order supplies worldwide, go to www.hp.com/ghp/buyonline.html. To order accessories, go to www.hp.com/support/cljcp4025 or www.hp.com/support/cljcp4525.

Part numbers

The following list of accessories was current at the time of printing. Ordering information and availability of the accessories might change during the life of the product.

Accessories

Product name	Product number	Part number
HP Color LaserJet 1 x 500 Paper Feeder and stand	CC422A	CC493-67902
HP Color LaserJet 3 x 500 Paper Feeder and stand	CC423A	CC493-67903
HP Postcard media insert tray	CC497A	CC497-67902

Print cartridges and toner collection unit

Product name[1]	Product number	Part number
HP Color LaserJet standard black print cartridge (11K)	CE260A	CE260-67901
HP Color LaserJet high capacity black print cartridge (16K)	CE260X	CE264-67901
HP Color LaserJet cyan print cartridge	CE261A	CE261-67901
HP Color LaserJet yellow print cartridge	CE262A	CE262-67901
HP Color LaserJet magenta print cartridge	CE263A	CE263-67901

[1] For more information, go to www.hp.com/go/learnaboutsupplies

Memory

Product name	Product number	Part number
200-pin DDR2 SODIMM x64 memory module (256MB)	CE466A	CC493-67904
200-pin DDR2 SODIMM x64 memory module (512MB)	CE467A	CC493-67905

Cables and interfaces

Product name	Product number	Part number
Enhanced I/O (EIO) card	J7961G	
USB cable 2 meter standard	Q6264A	

Customer self repair (CSR) parts

Product name	Product number	Part number	Self-repair level
Formatter assembly kit		CC493-69001	1A
HP postcard media insert replacement		CC497-67902	1A
Feed and separation roller kit (Trays 2–5) Includes 1 each, feed and separation rollers		CC493-67907	1A
Secondary transfer (T2) roller kit		CC493-67908	1A
Tray 1 roller kit		CC493-67906	1A
Toner collection unit kit		CC493-67913	1A
Maintenance transfer kit Includes ITB, transfer roller (T2), tray 1 pickup roller, Trays 2-5 feed and separation rollers	CE249A	CC493-67910	1A
Repair transfer kit Includes ITB and transfer roller (T2)		CC493-67909	1A
110V fuser kit	CE246A	CC493-67911	1A
220V fuser kit	CE247A	CC493-67912	1A
Internal hard-disk drive kit		CC493-67901	1A
Fuser cleaning kit		CC468-67919	1A
Service manual		CC489-90936	1A

Service maintenance kits

Product name	Part number
Tray 1 separation pad	RL1-1937-000CN
Trays 2-5 pickup roller Qty. 1	RL1-2099-000CN

Table 4-1 Maintenance kits

Product name	Product number	Part number	Self-repair level
Fuser kit (110 V)	CE246A	CC493-67911	1A
Fuser kit (220 V)	CE247A	CC493-67912	1A
Transfer kit Includes ITB, transfer roller (T2), tray 1 pickup roller, Trays 2-5 feed and separation rollers	CE249A	CC493-67910	1A

Unique components

Use the following tables as a quick reference to identify component part numbers by product voltage, or function (simplex or duplex).

Table 4-2 110V and 220V unique components

Item	Part number
Fuser kit, 110 V	CC493-67911
Fuser kit, 220 V	CC493-67912
Low-voltage power supply, 110 V	RM1-5763-000CN
Low-voltage power supply, 220 V	RM1-5764-000CN

Table 4-3 Simplex and duplex unique components

Item	Part number
Registration assembly kit, simplex	CC493-67916
Registration assembly kit, duplex	CC493-67917
Secondary transfer assembly kit, simplex	CC492-67902
Secondary transfer assembly kit, duplex	CC492-67901
Guide, paper feed, simplex	RC2-4566-000CN
Duplexing guide assembly, duplex	RM1-5531-000CN
Fuser drive assembly, simplex	RM1-6702-000CN
Fuser drive assembly, duplex	RM1-5656-000CN
Simplex delivery assembly kit	CC493-67918
Duplex delivery assembly kit	CC493-67919

Screws

NOTE: The screw illustrations in the following table are for reference only. Screws might vary in size and appearance from those shown in this table.

Table 4-4 Common fasteners

Example	Description	Size	Part Number
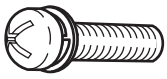	Screw, with washer	M3X8	XA9-1420-000CN
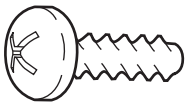	Screw, tapping, truss head	M4X10	XB4-7401-005CN
	Screw, tap	M3X6	XA9-1503-000CN
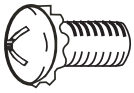	Screw, D	M3X8	XA9-1671-000CN
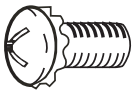	Screw, tooth washer	M4X6	XB2–7400-606CN
	Screw, step	Not applicable	RC3-0912-000CN

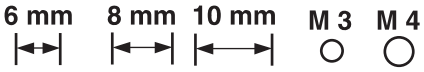

How to use the parts lists and diagrams

The figures in this chapter show the major subassemblies in the product and their component parts. A parts list table follows each exploded view assembly diagram. Each table lists the item number, the associated part number, and the description of each part. If a part is not listed in the table, then it is not a field replacement unit (FRU).

△ **CAUTION:** Be sure to order the correct part. When looking for part numbers for electrical components, pay careful attention to the voltage that is listed in the description column. Doing so will ensure that the part number selected is for the correct all-in-one model.

NOTE: In this manual, the abbreviation “PCA” stands for “printed circuit-board assembly.” Components described as a PCA might consist of a single circuit board or a circuit board plus other parts, such as cables and sensors.

External covers, panels, and doors

Figure 4-1 External covers, panels, and doors

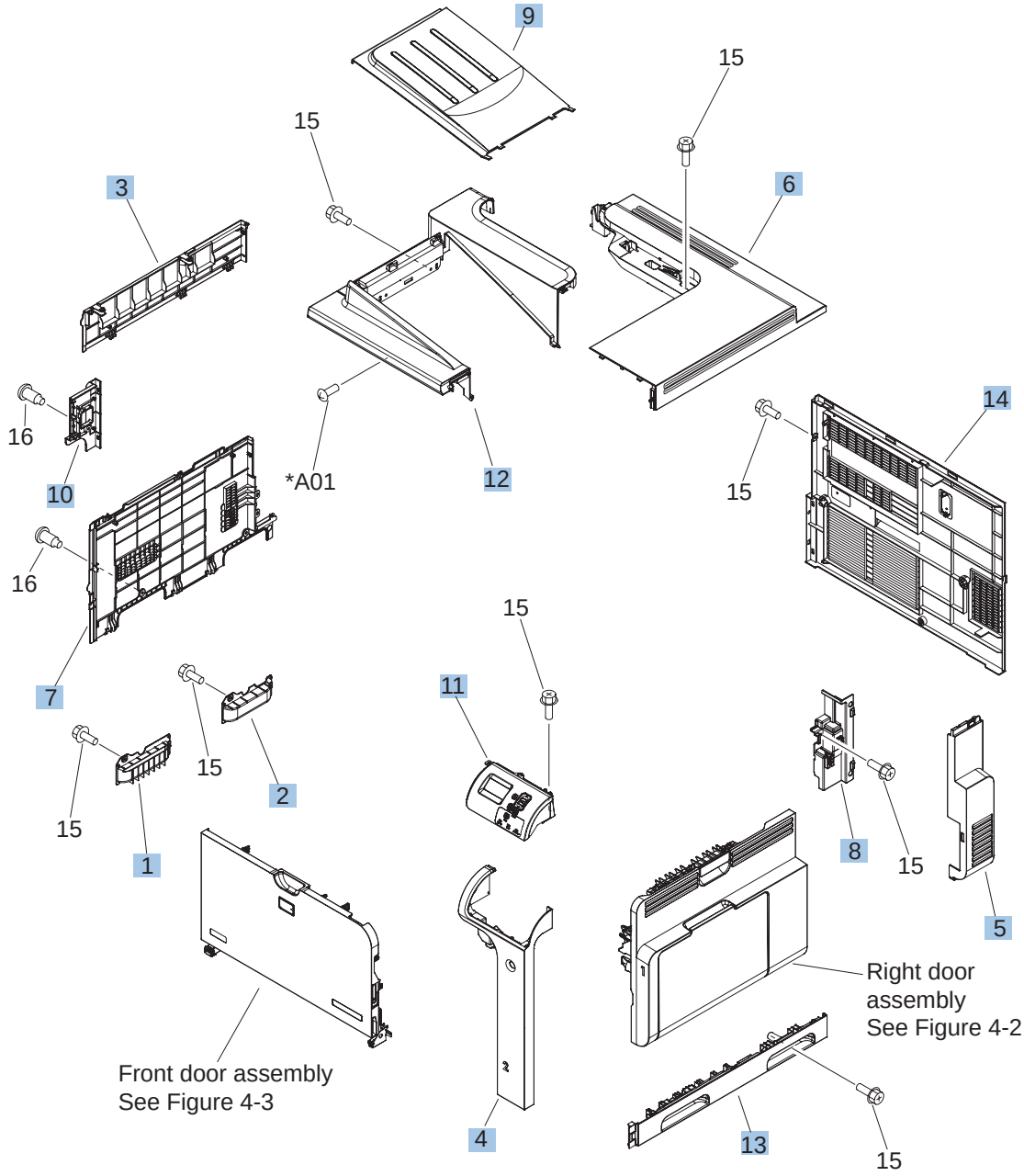

Table 4-5 External covers, panels, and doors;

Ref	Description	Part number	Qty
1	Grip, left front	RC2-4268-000CN	1
2	Grip, left rear	RC2-4269-000CN	1
3	Cover, left upper	RC2-4270-000CN	1
4	Cover, right front	RC2-4272-000CN	1
5	Cover, right rear	RC2-4273-000CN	1
6	Cover, upper	RC2-4276-000CN	1
7	Cover, left lower	RC2-4300-000CN	1
8	Cover, inner	RM1-5520-000CN	1
9	Tray, face-down swing	RC2-4547-000CN	1
10	Cover, left rear	RC2-8213-000CN	1
11	Control-panel assembly	RM1-5786-000CN	1
12	Face-down tray assembly	RM1-5494-000CN	1
13	Right handle cover assembly	RM1-5507-000CN	1
14	Rear cover assembly	RM1-5508-000CN	1

Right door assembly

Figure 4-2 Right door assembly

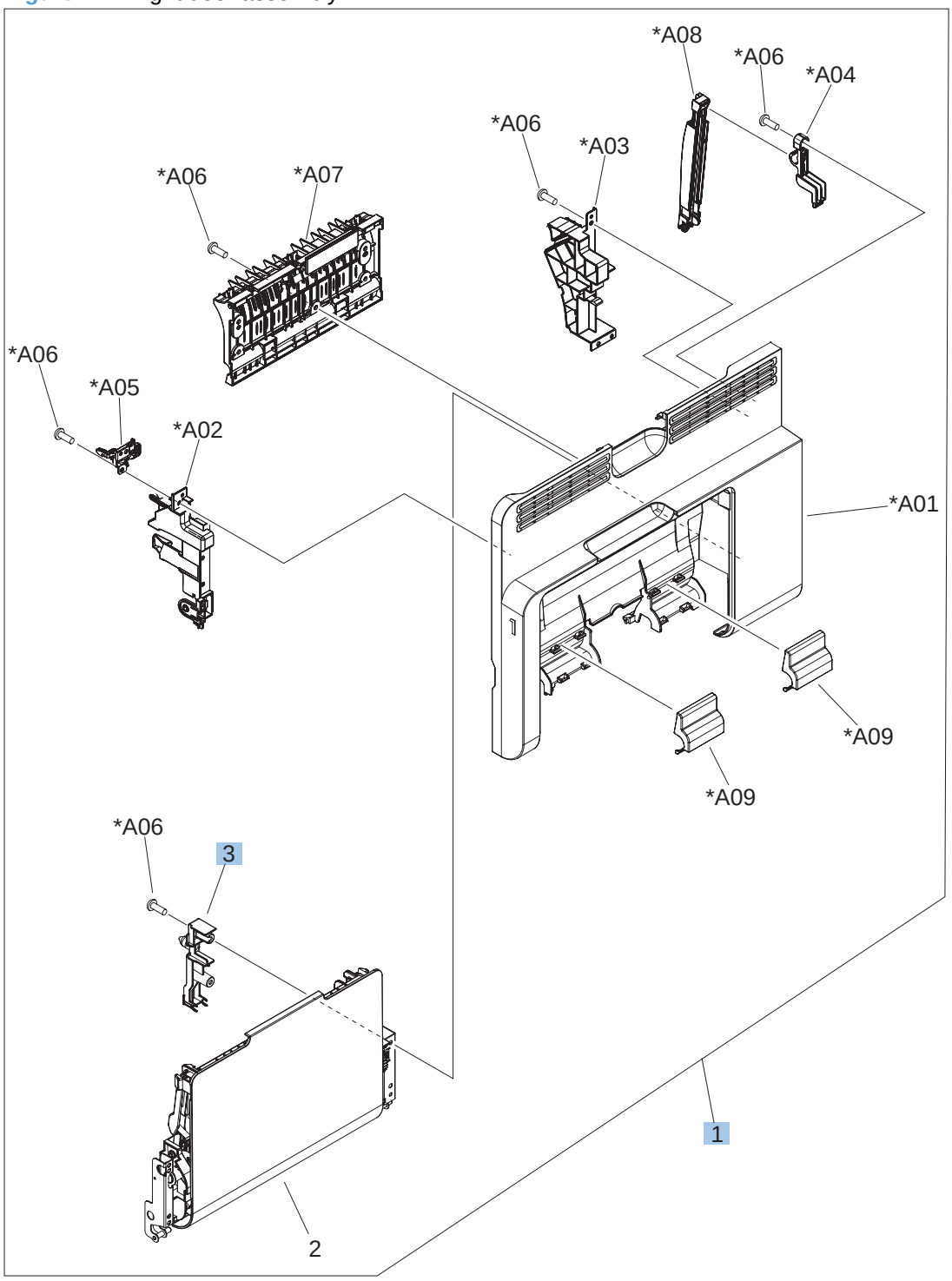

Table 4-6 Right door assembly

Ref	Description	Part number	Qty
1	Right door assembly	RM1-5509-000CN	1
3	Cover, M.P. crossmember R	RC2-4747-000CN	1

Front door assembly

Figure 4-3 Front door assembly

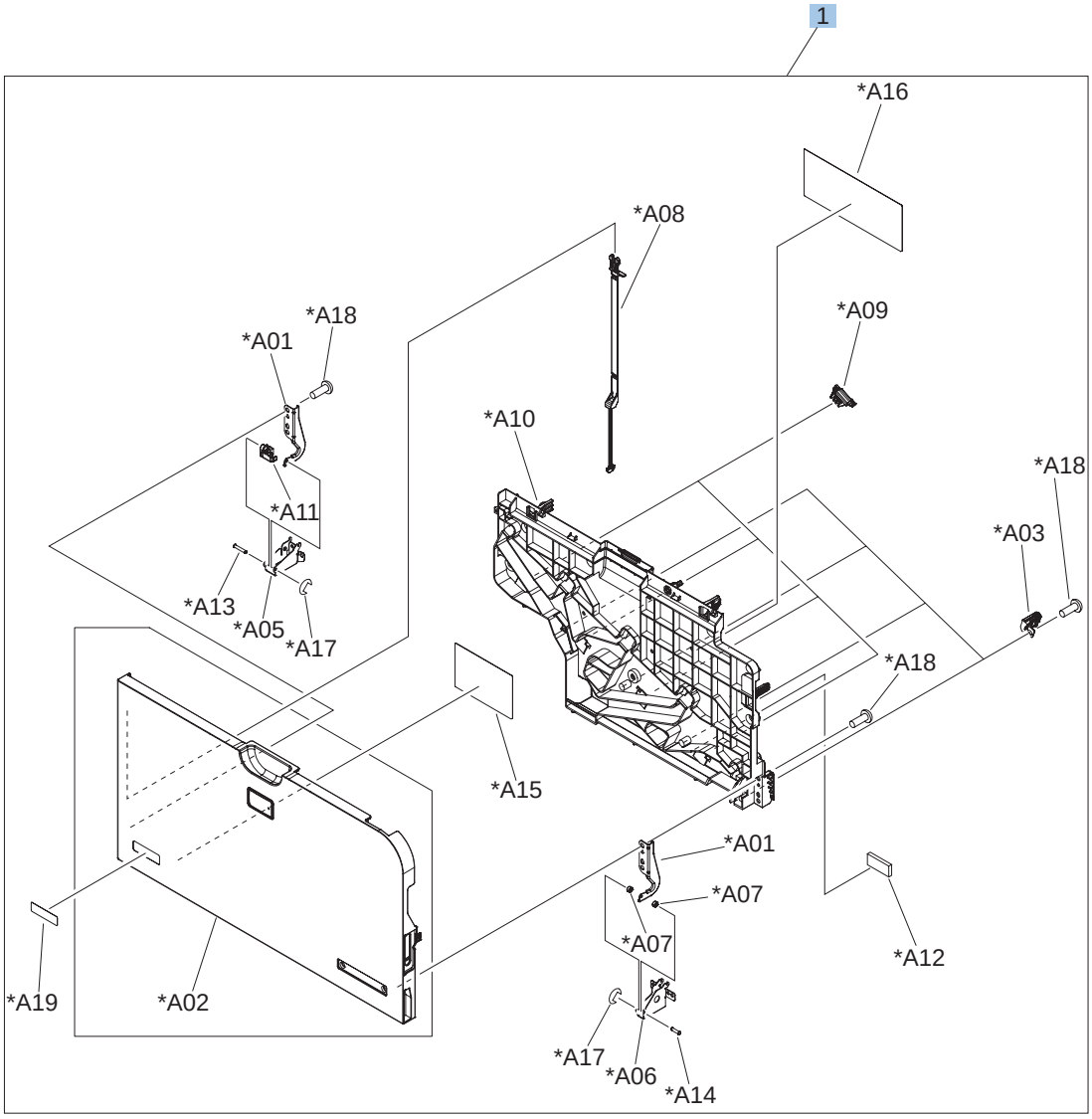

Table 4-7 Front door assembly

Ref	Description	Part number	Qty
1	Front door assembly	RM1-5506-000CN	1

Internal components

Internal components (1 of 7)

Figure 4-4 Internal components 1 of 7

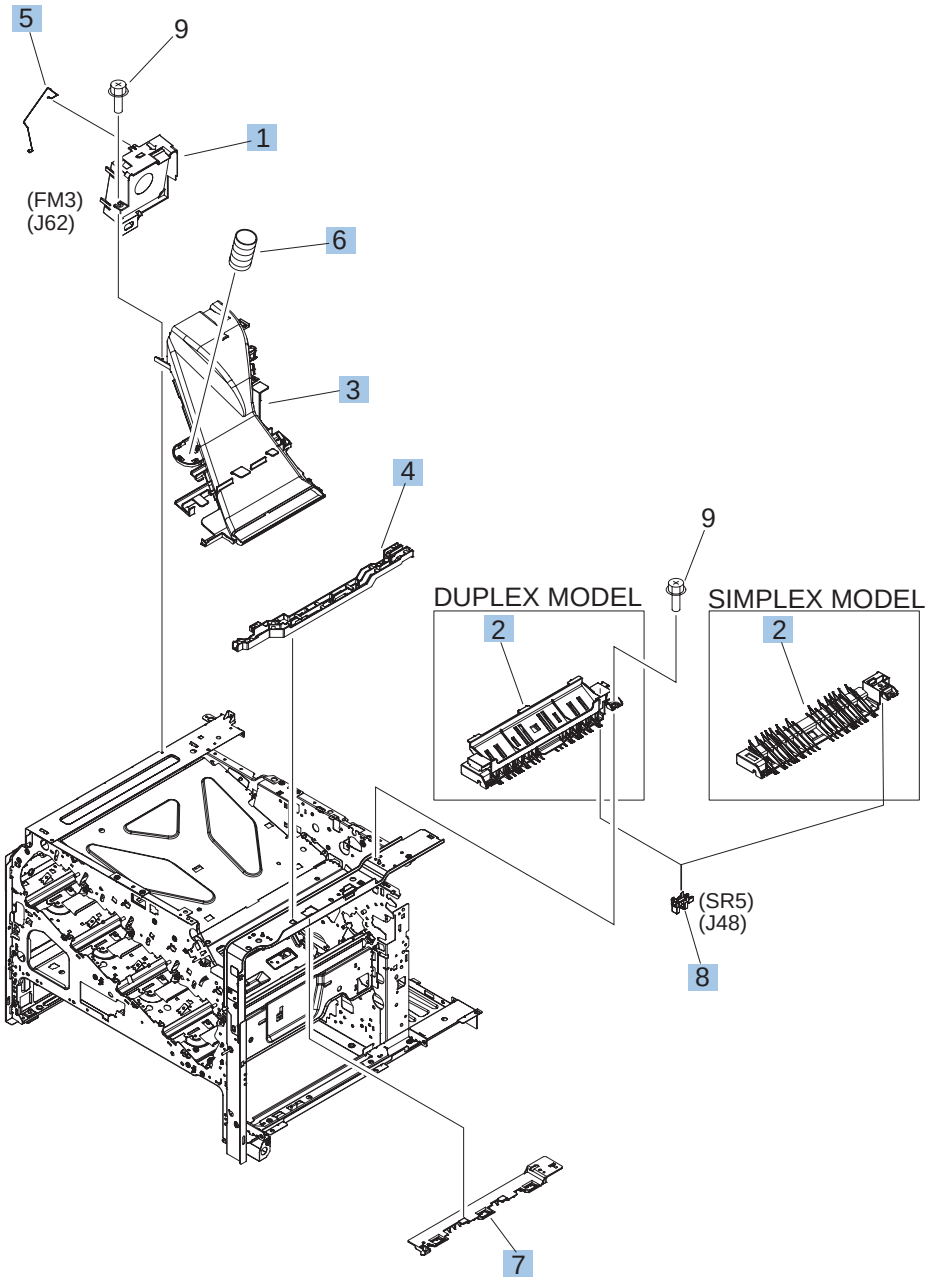

Table 4-8 Internal components (1 of 7)

Ref	Description	Part number	Qty
1	Paper delivery fan assembly	RM1-5501-000CN	1
2	Guide, paper feed, simplex	RC2-4566-000CN	1
2	Duplexing guide assembly, duplex	RM1-5531-000CN	1
3	Paper delivery fan duct assembly	RM1-5583-000CN	1
4	Holder, cable	RC2-3997-000CN	1
5	Rod, paper delivery fan	RC2-4070-000CN	1
6	Spring, compression	RU6-2310-000CN	1
7	Holder, right door handle	RC2-4573-000CN	1
8	Photo interrupter, TLP1243	WG8-5696-000CN	6

Internal components (2 of 7)

Figure 4-5 Internal components 2 of 7

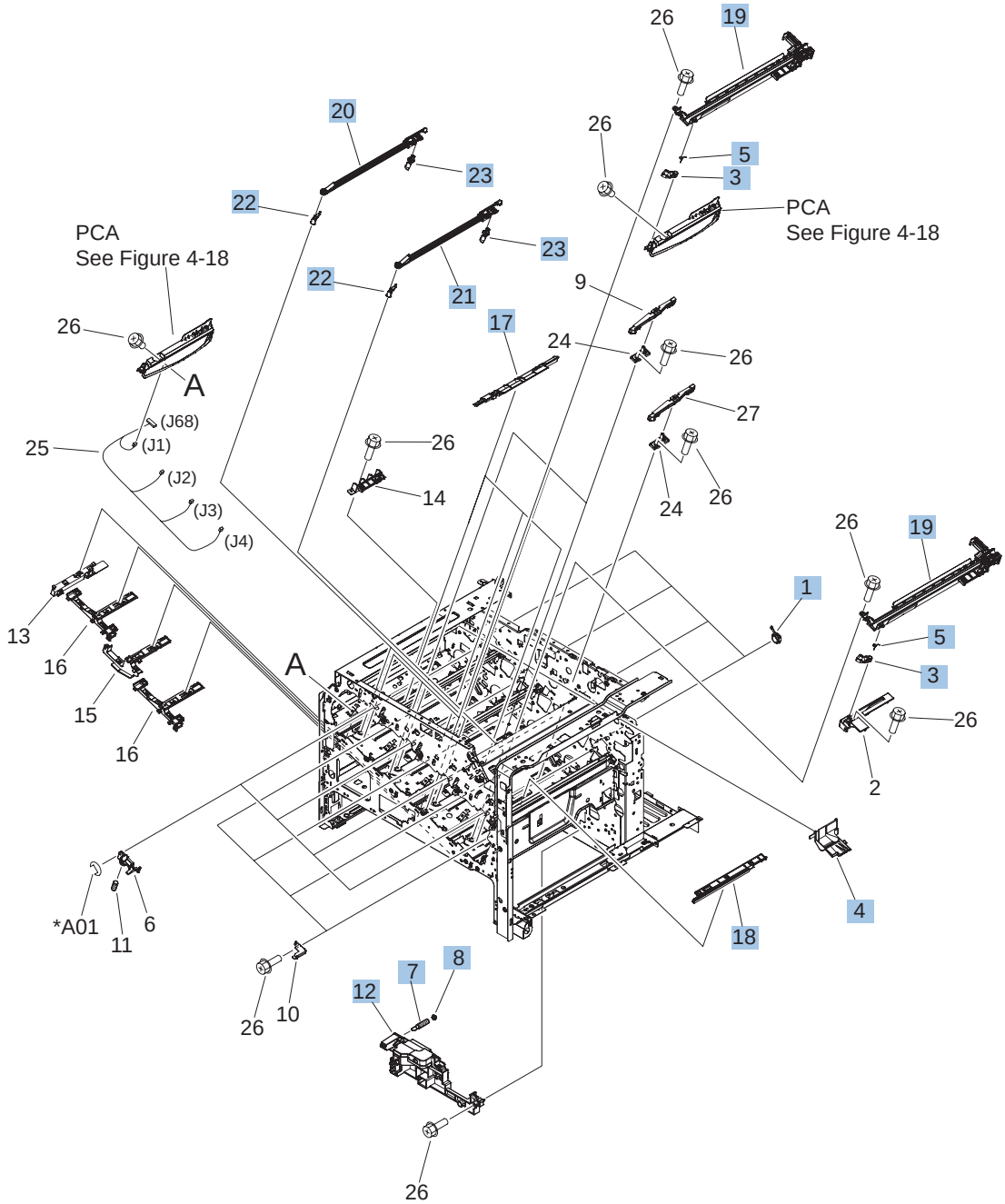

Table 4-9 Internal components (2 of 7)

Ref	Description	Part number	Qty
1	Bushing	RC2-9719-000CN	4
3	Lever, CRG. lock	RC2-3986-000CN	4
4	Tray, waste toner catch	RC2-4218-000CN	1
5	Spring, torsion	RU6-2247-000CN	4
7	Spring, grounding	RC2-4469-000CN	1
8	Bushing	RC2-4470-000CN	1
12	Lifter base assembly	RM1-5913-000CN	1
17	Cover	RC2-4403-000CN	3
18	Cover	RC2-5962-000CN	1
19	Crg. Guide lower assembly	RM1-5486-000CN	4
20	Shutter assembly	RM1-5488-000CN	2
21	Shutter assembly	RM1-5489-000CN	2
22	Shutter arm assembly	RM1-5585-000CN	4
23	Shutter arm assembly	RM1-5586-000CN	4

Internal components (3 of 7)

Figure 4-6 Internal components 3 of 7

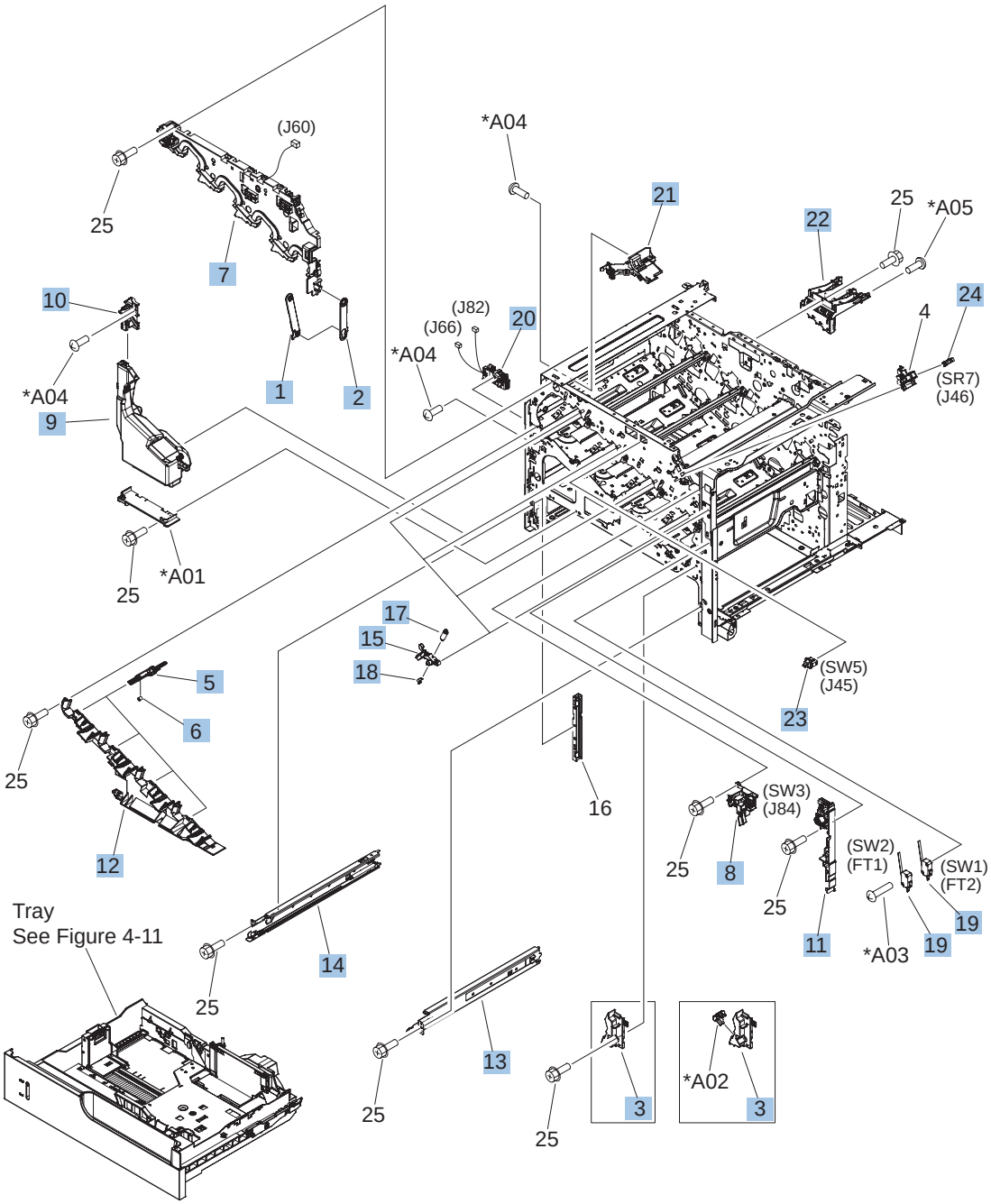

Table 4-10 Internal components (3 of 7)

Ref	Description	Part number	Qty
1	Hinge, front door	RC2-4291-000CN	1
2	Hinge, front door	RC2-4292-000CN	1
3	Cover	RC2-4308-000CN	1
5	Lever, shutter	RC2-4415-000CN	4
6	Spring, compression	RU6-2316-000CN	4
7	Front inner cover upper assembly	RM1-5495-000CN	1
8	Interlock assembly	RM1-5496-000CN	1
9	Waste toner collection kit (includes instructions and wipe)	CC493-67913	1
10	Waste toner duct assembly	RM1-5519-000CN	1
11	Power switch assembly	RM1-5582-000CN	1
12	Front inner cover lower assembly	RM1-5598-000CN	1
13	Cassette rail right assembly	RM1-6195-000CN	1
14	Cassette rail left assembly	RM1-6196-000CN	1
15	Lever, crg. pressure, front	RC2-3983-020CN	4
17	Spring, tension	RU6-2236-000CN	4
18	Spring, grounding	RU6-2237-000CN	4
19	Switch	WC4-5303-000CN	2
20	Waste toner detect assembly	RM1-5545-000CN	1
21	Waste toner paper feed assembly	RM1-5584-000CN	1
22	High voltage holder assembly	RM1-6694-000CN	1
23	Switch, push	WC2-5637-000CN	1
24	Photo interrupter	WG8-5696-000CN	1

Internal components (4 of 7)

Figure 4-7 Internal components 4 of 7

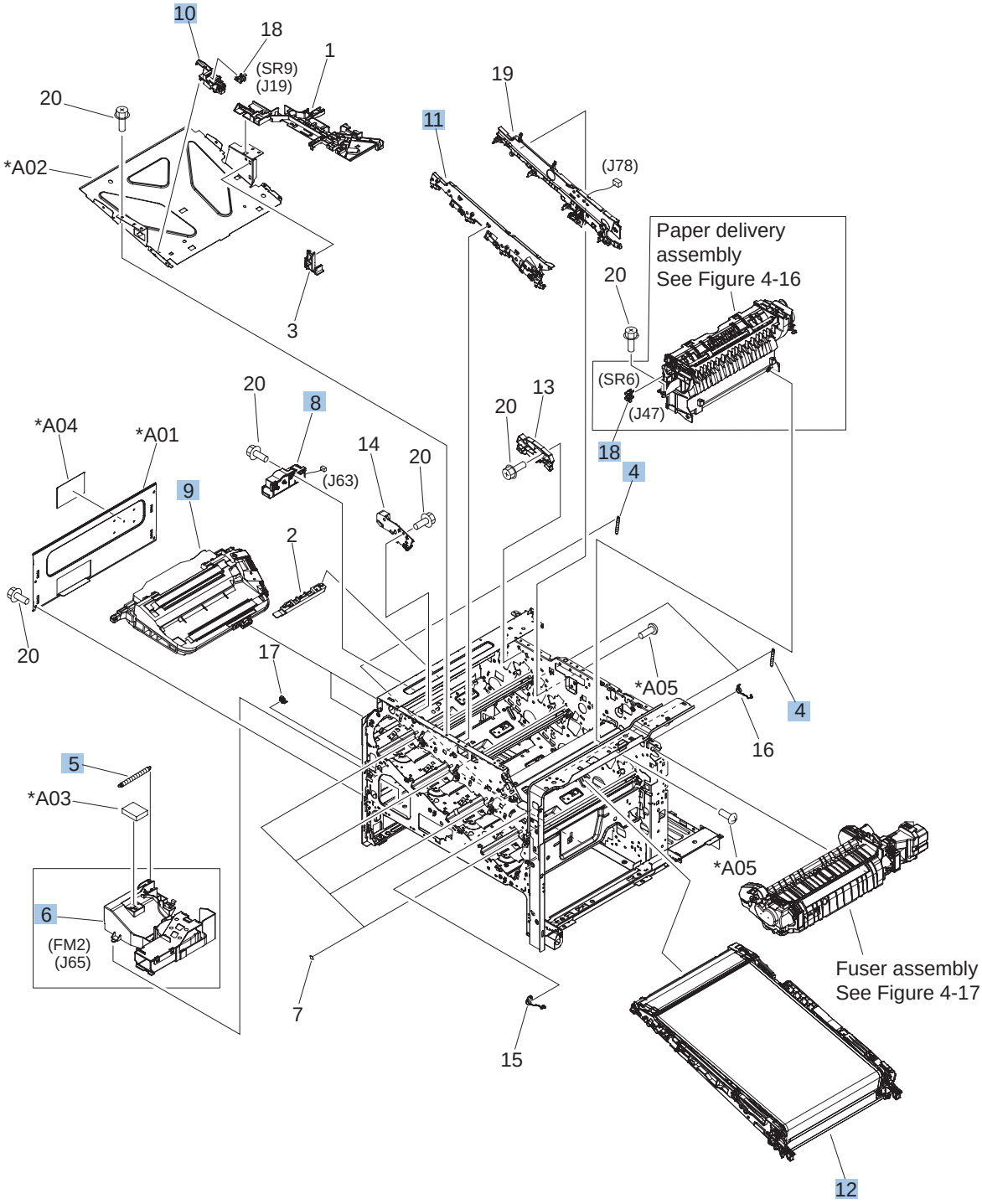

Table 4-11 Internal components (4 of 7)

Ref	Description	Part number	Qty
4	Spring, tension	RU6-2235-000CN	4
5	Spring, tension	RU6-2376-000CN	1
6	Cartridge fan assembly	RM1-5499-000CN	1
8	Waste toner motor assembly	RM1-5605-000CN	1
9	Laser scanner kit (includes instructions and one scanner assy.)	CC493-67914	2
10	Position detect assembly	RM1-5500-000CN	1
11	Front light guide assembly	RM1-5492-000CN	1
12	Intermediate transfer belt kit (includes instructions, ITB, and T2 roller)	CC493-67909	1
18	Photo interrupter	WG8-5696-000CN	1

Internal components (5 of 7)

Figure 4-8 Internal components 5 of 7

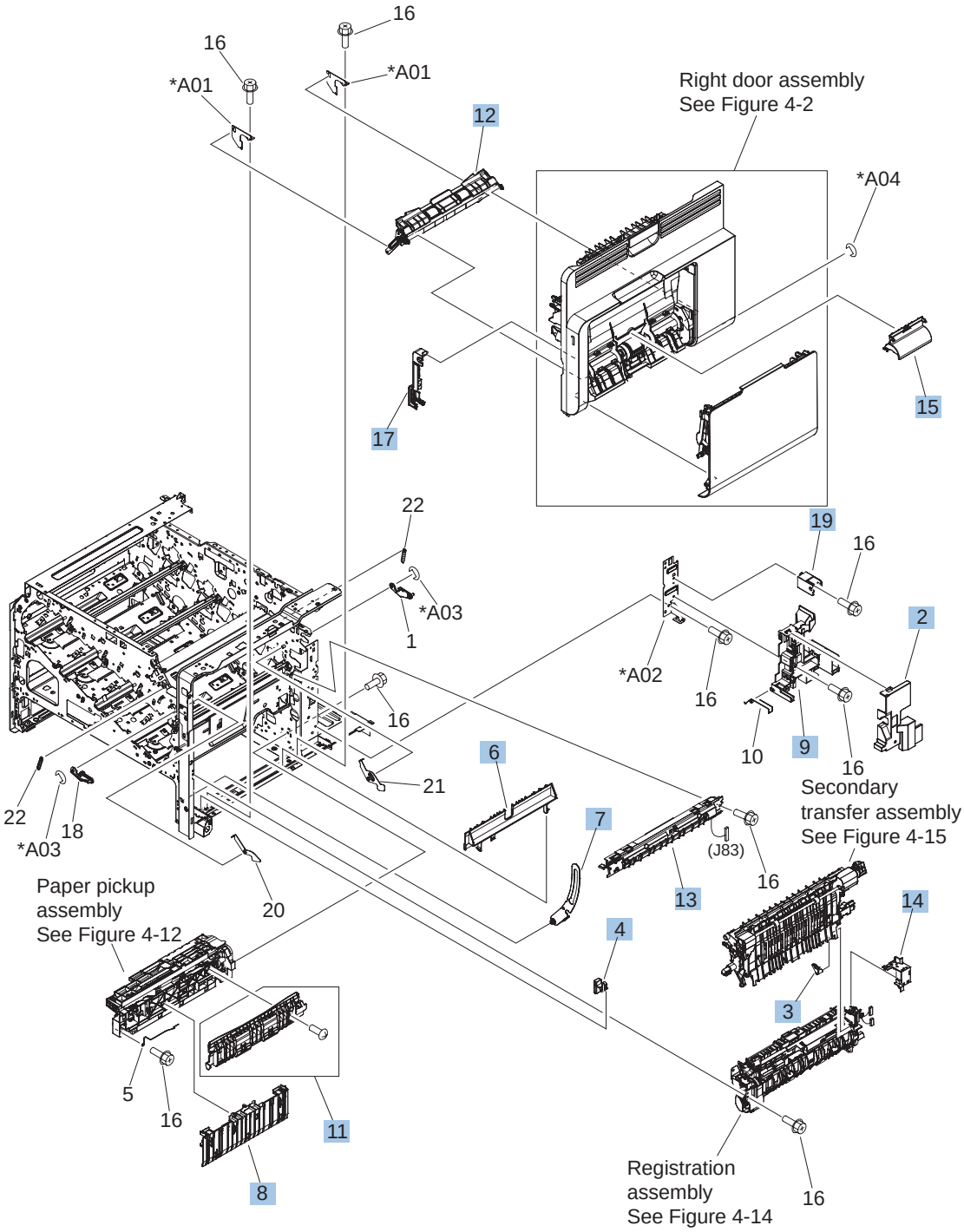

Table 4-12 Internal components (5 of 7)

Ref	Description	Part number	Qty
2	Cover, inner	RC2-3981-000CN	1
3	Shaft support (included in secondary transfer kit; see Figure 4–15)	RC2-4162-000CN	1
4	Spacer	RC2-4514-000CN	1
6	Guide	RC2-4527-000CN	1
7	Link, right door	RC2-4726-000CN	1
8	Guide, cassette option	RC2-4741-000CN	1
9	Holder, duct cable	RC2-8239-000CN	1
11	Cassette guide assembly	RM1-5504-000CN	1
12	Paper feed roller assembly	RM1-5525-000CN	1
13	Density detect assembly	RM1-5641-000CN	1
14	Cable cover assembly	RM1-6695-000CN	1
15	Cover, roller	RC2-4483-000CN	1
17	Cover, M.P. cross member	RC2-9189-000CN	1
19	Arm, door link supporting, right	RC2-4055-000CN	1

Internal components (6 of 7)

Figure 4-9 Internal components 6 of 7

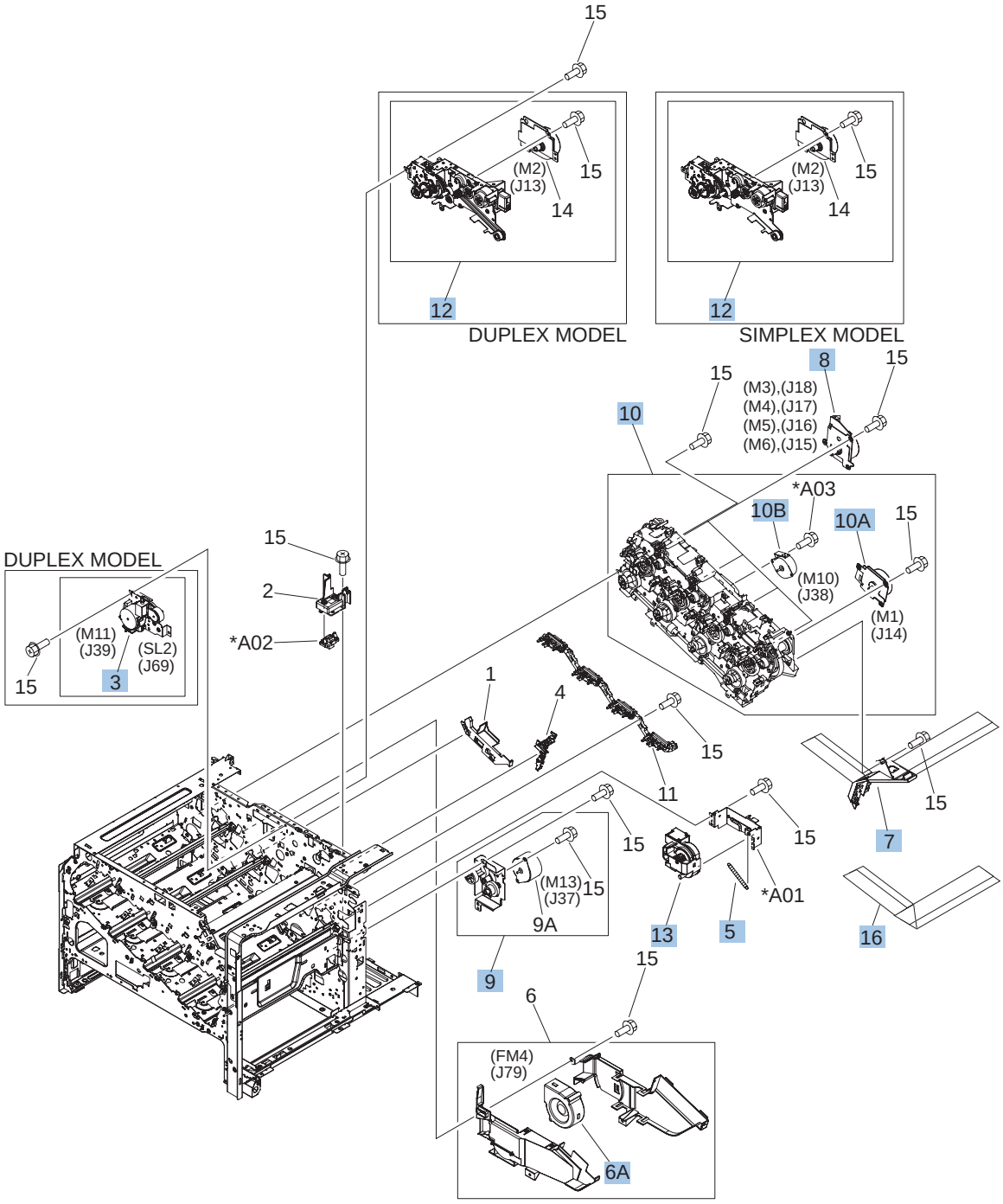

Table 4-13 Internal components 6 of 7

Ref	Description	Part number	Qty
3	Duplexing drive assembly	RM1-5546-000CN	1
5	Spring, tension	RU6-2468-000CN	1
6A	Cartridge fan	RK2-2418-000CN	1
7	Flexible flat cable assembly (includes two FFC; DCC to laser/scanner)	RM1-5498-000CN	1
8	Main DC motor assembly	RM1-5521-000CN	4
9	Paper pickup drive assembly	RM1-5549-000CN	1
10	Main drive assembly kit (includes instructions)	CC493-67915	1
10A	ITB motor assembly	RM1-5777-000CN	1
10B	Developing disengaging motor	RK2-2415-000CN	1
12	Fuser drive assembly, simplex	RM1-6702-000CN	1
12	Fuser drive assembly, duplex	RM1-5656-000CN	1
13	Lifter assembly	RM1-5914-000CN	1
16	Flat flexible cable (DCC to HVPS lower)	RK2-2604-000CN	1

Internal components (7 of 7)

Figure 4-10 Internal components 7 of 7

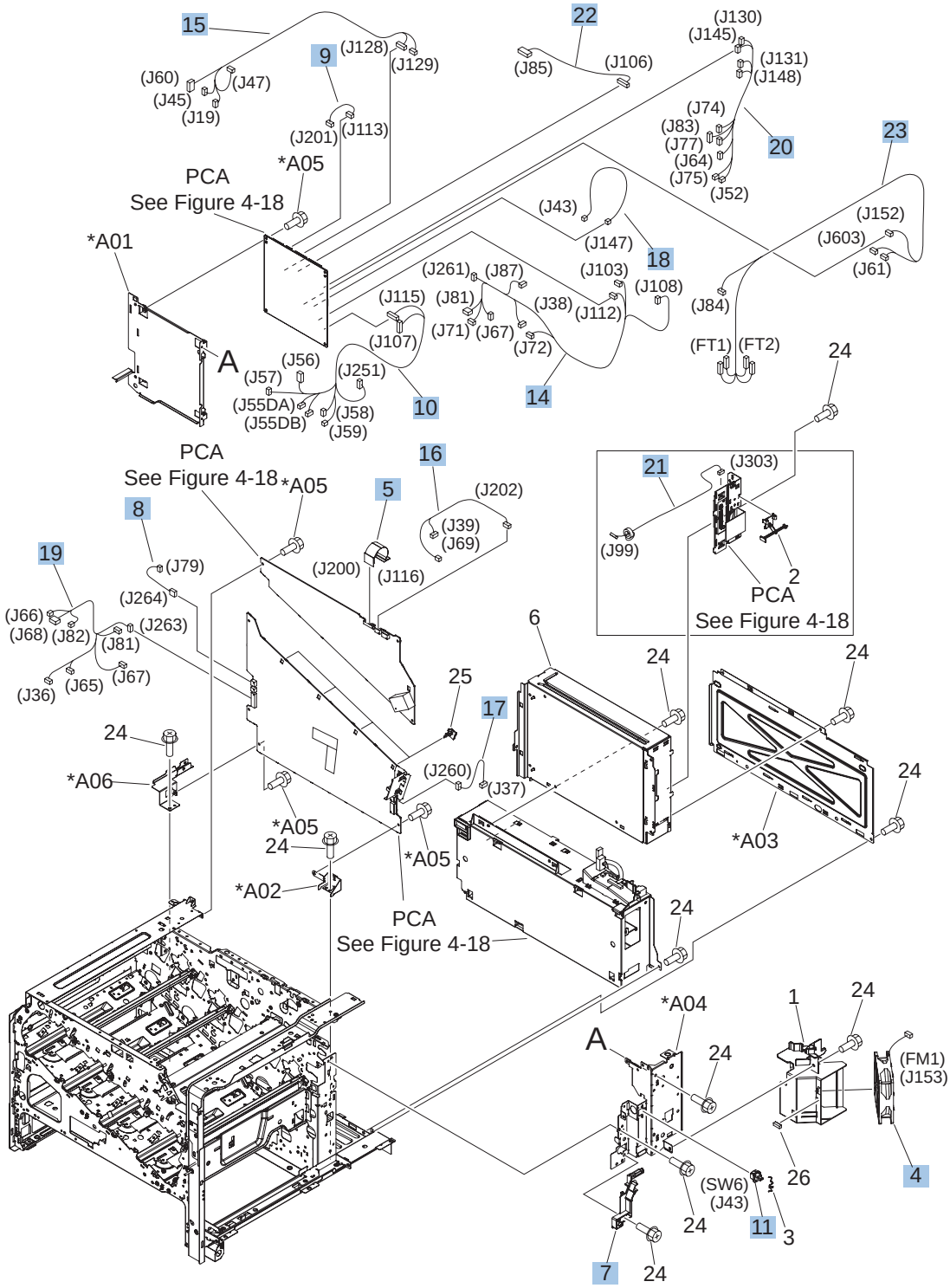

Table 4-14 Internal components 7 of 7

Ref	Description	Part number	Qty
4	Fan	RK2-2577-000CN	1
5	Cable, flexible flat, H.V.T.	RK2-2603-000CN	1
7	Contact assembly	RM1-5502-000CN	1
8	Fan cable assembly	RM1-5821-000CN	1
9	H.V. power supply cable assembly	RM1-5724-000CN	1
10	Lower main cable assembly	RM1-5801-000CN	1
11	Switch, push	WC2-5637-000CN	1
14	Connecting cable assembly	RM1-5799-000CN	1
15	Upper main cable assembly	RM1-5800-000CN	1
16	Duplexing cable assembly, duplex	RM1-5803-000CN	1
17	Feed cable assembly	RM1-5804-000CN	1
18	Switch cable assembly	RM1-5807-000CN	1
19	Connecting cable assembly	RM1-5811-000CN	1
20	Connecting cable assembly	RM1-5812-000CN	1
21	Control panel cable assembly	RM1-5814-000CN	1
22	Sensor cable assembly	RM1-5815-000CN	1
23	Interlock switch cable assembly	RM1-5816-000CN	1

Cassettes 2-5

Figure 4-11 Cassettes 2-5

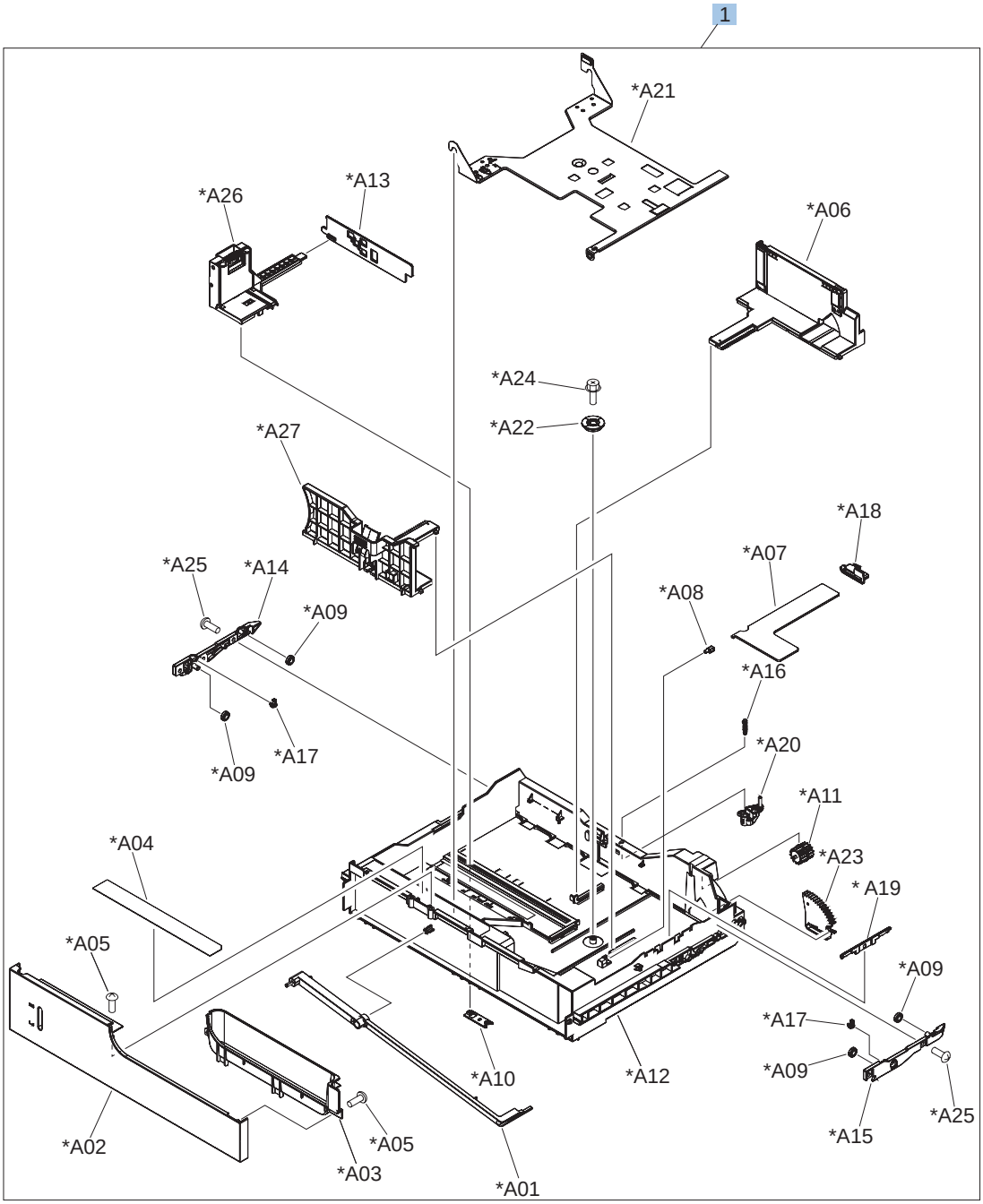

Table 4-15 Cassette

Ref	Description	Part number	Qty
1	Cassette	RM1-5928-000CN	1

Paper pickup assembly

Figure 4-12 Paper pickup assembly

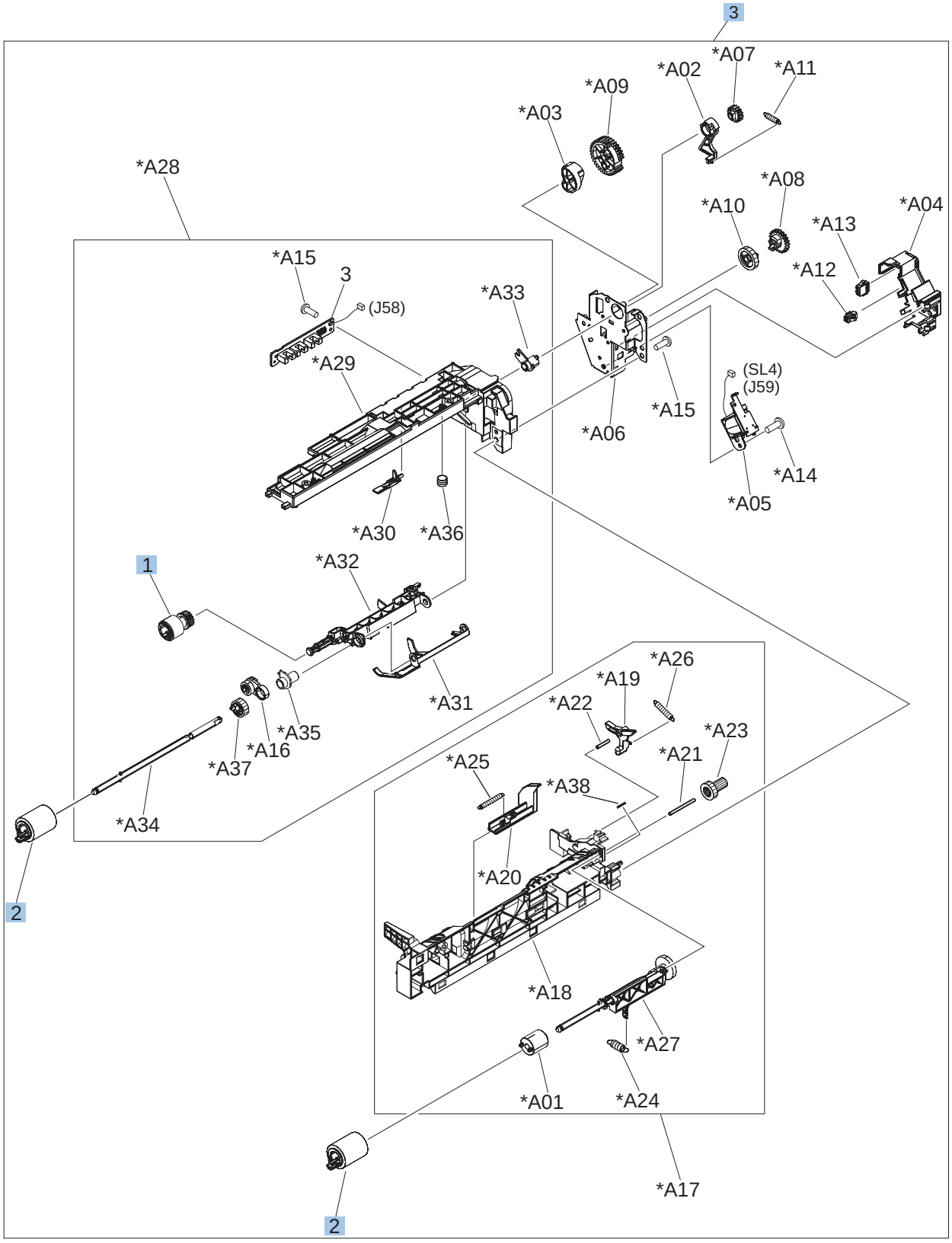

Table 4-16 Paper pickup assembly

Ref	Description	Part number	Qty
1	Roller, paper pickup	RL1-2099-000CN	1
2	Paper feed roller	RM1-0037-020CN	2
3	Paper pickup assembly	RM1-5919-000CN	1

Tray 1 paper pickup assembly

Figure 4-13 Tray 1 paper pickup assembly

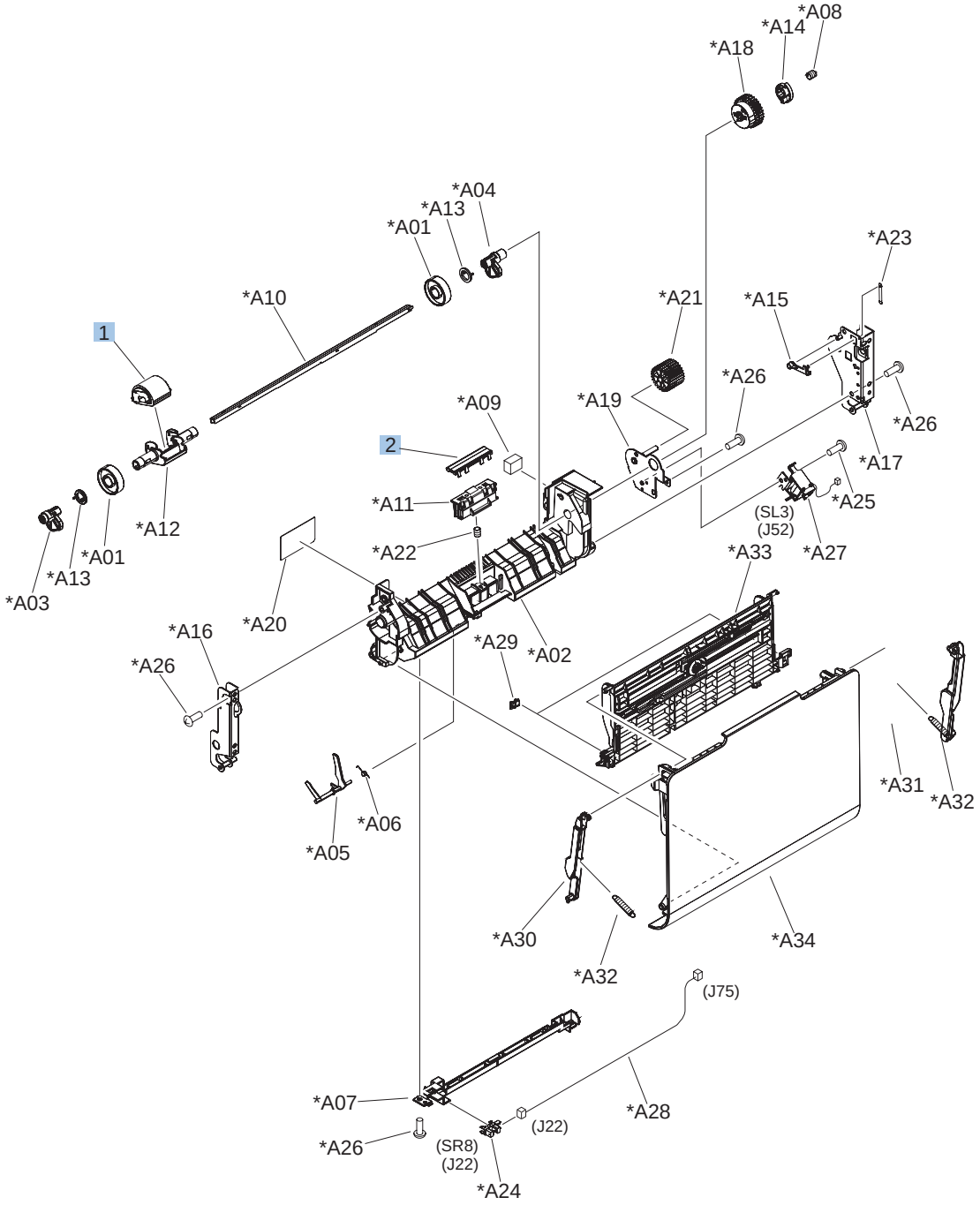

Table 4-17 Tray 1 paper pickup assembly

Ref	Description	Part number	Qty
1	Pickup roller (Tray 1) kit (includes instructions)	CC493–67906	1
2	Separation pad (Tray 1)	RL1-1937-000CN	1

Registration assembly

Figure 4-14 Registration assembly

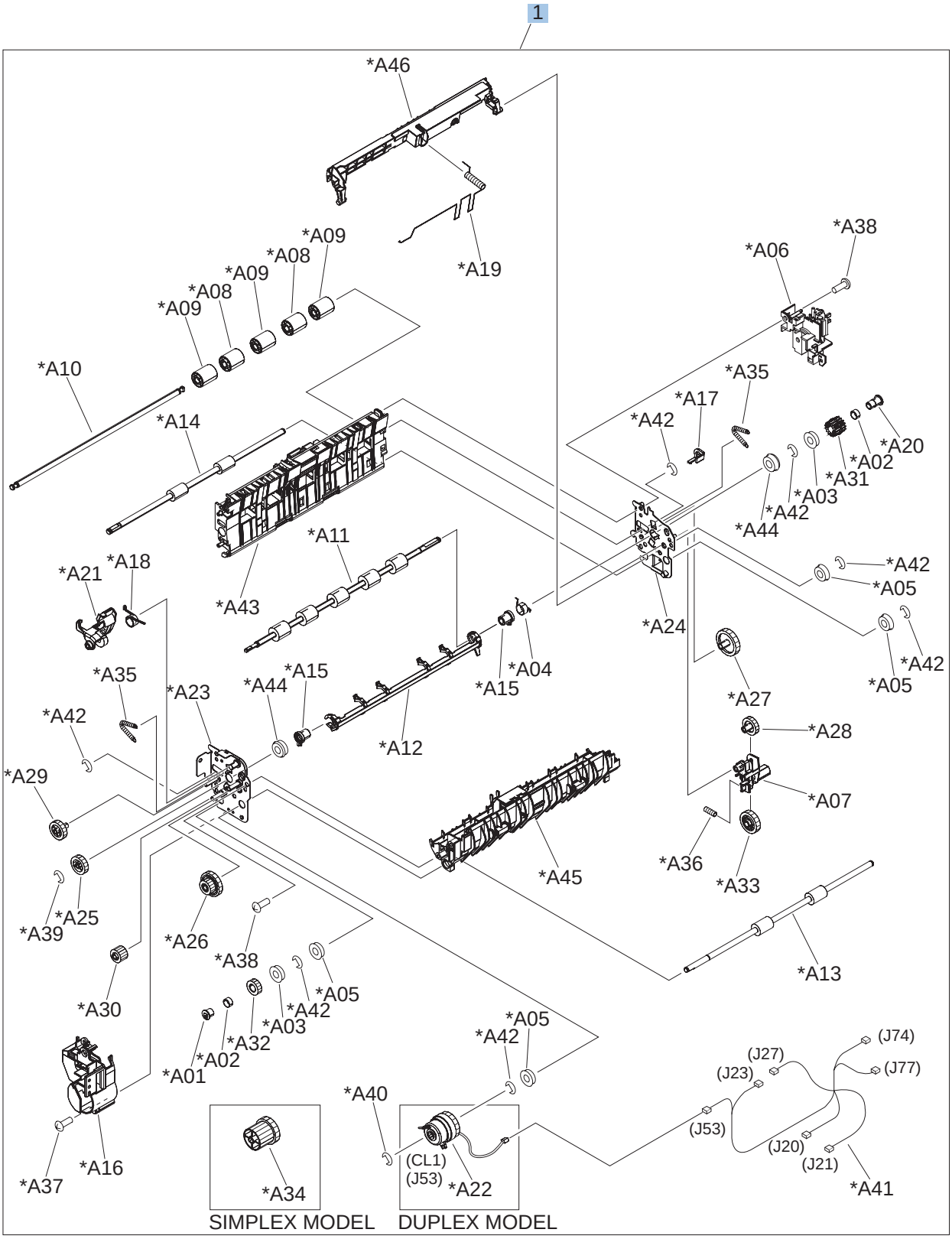

Table 4-18 Registration assembly

Ref	Description	Part number	Qty
1	Registration assembly kit, simplex (includes instructions)	CC493-67916	1
1	Registration assembly kit, duplex (includes instructions)	CC493-67917	1

Secondary transfer assembly

Figure 4-15 Secondary transfer assembly

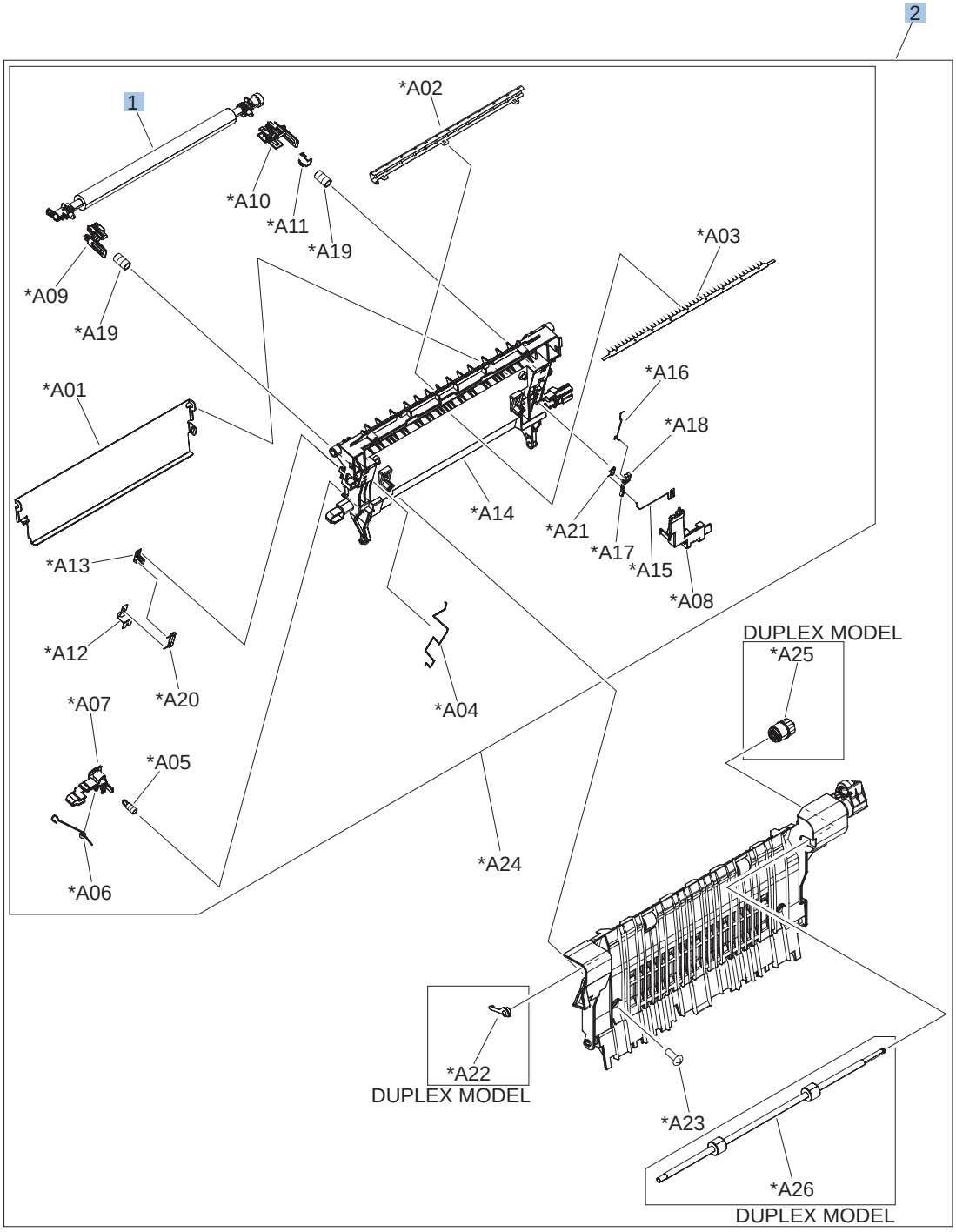

Table 4-19 Secondary Transfer assembly

Ref	Description	Part number	Qty
1	Secondary transfer roller assembly kit (includes instructions)	CC493-67908	1
2	Secondary transfer assembly, duplex kit (includes shaft-support clip; # 3 Figure 4–8)	CC493-67901	1
2	Secondary transfer assembly, simplex kit (includes shaft-support clip; # 3 Figure 4–8)	CC493-67902	1

Delivery assembly

Figure 4-16 Delivery assembly

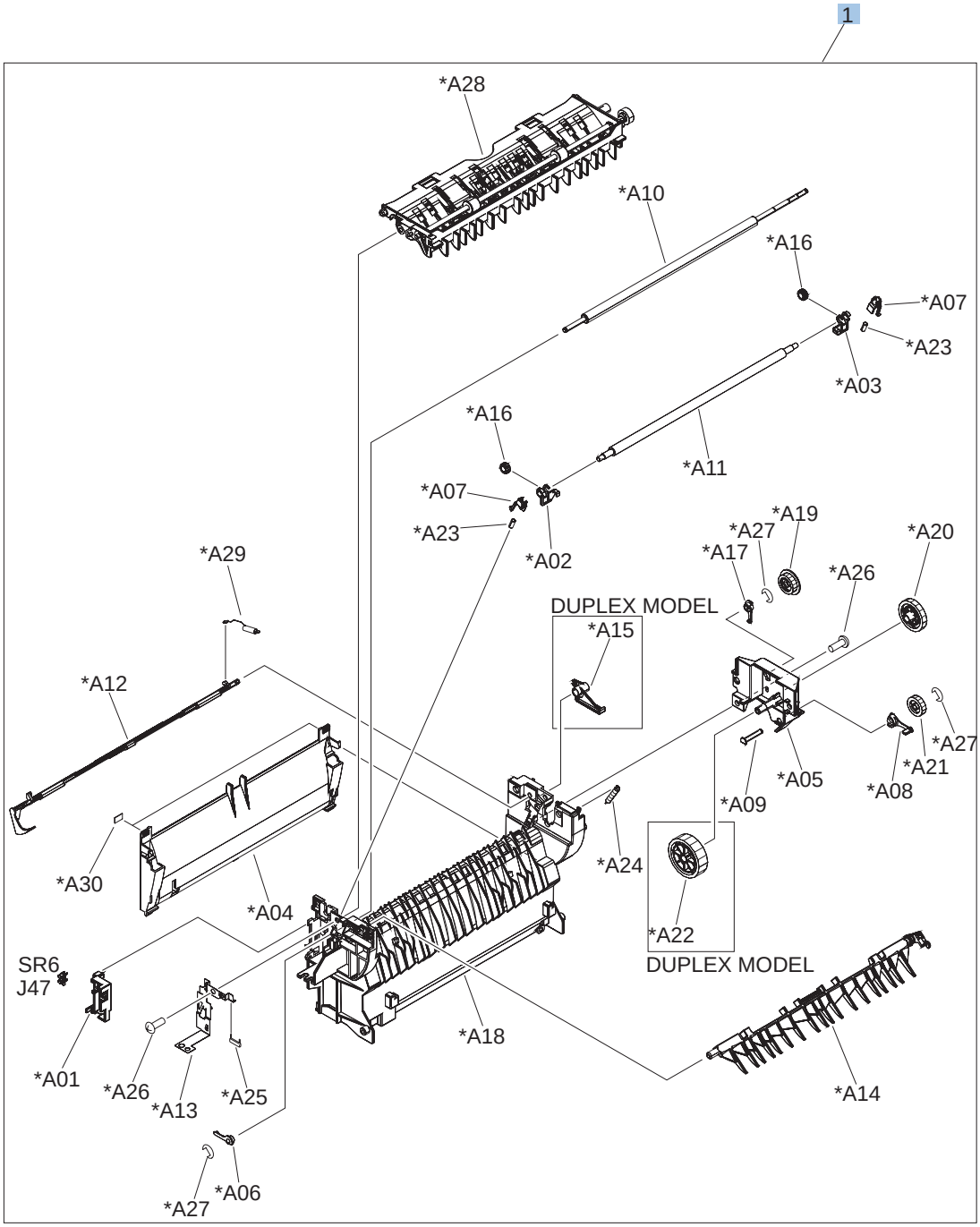

Table 4-20 Delivery assembly

Ref	Description	Part number	Qty
1	Simplex delivery assembly kit	CC493-67918	1
1	Duplex delivery assembly kit	CC493-67919	1

Fuser assembly

Figure 4-17 Fuser assembly

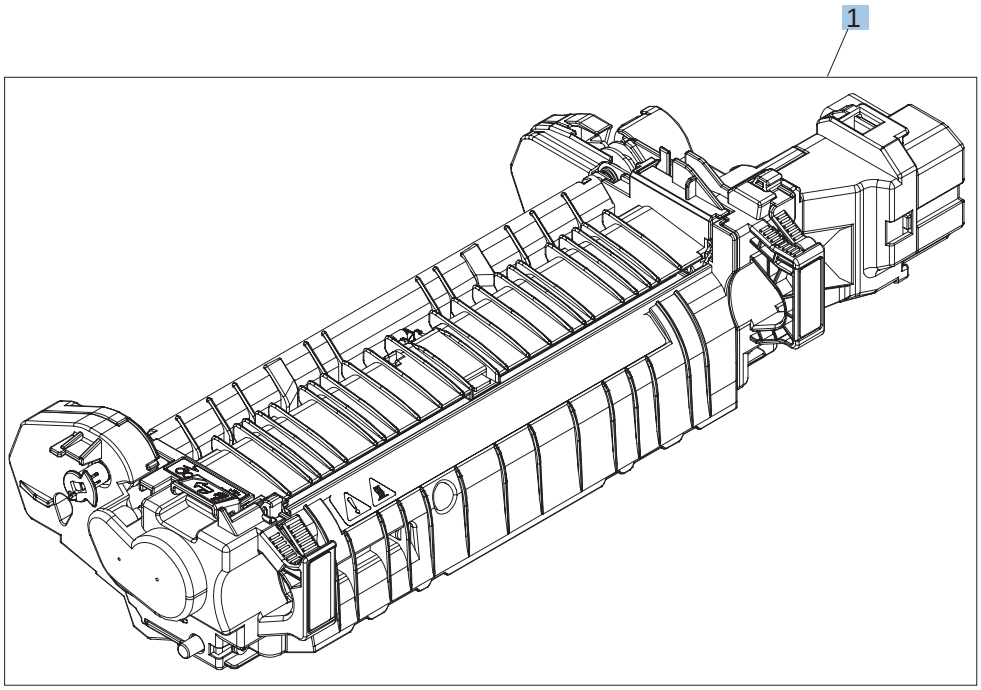

Table 4-21 Fuser assembly

Ref	Description	Part number	Qty
1	Fuser 110 V assembly kit (includes instructions)	CC493-67911	1
1	Fuser 220 V assembly kit (includes instructions)	CC493-67912	1

PCAs

Figure 4-18 PCAs

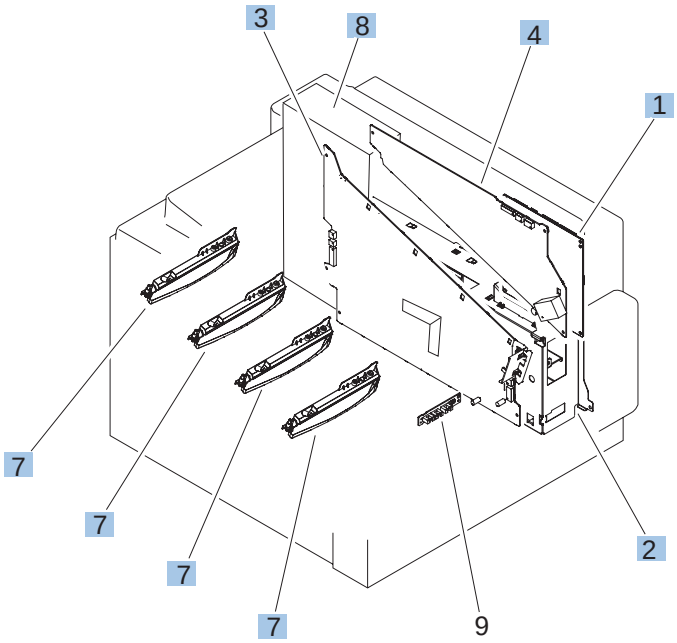

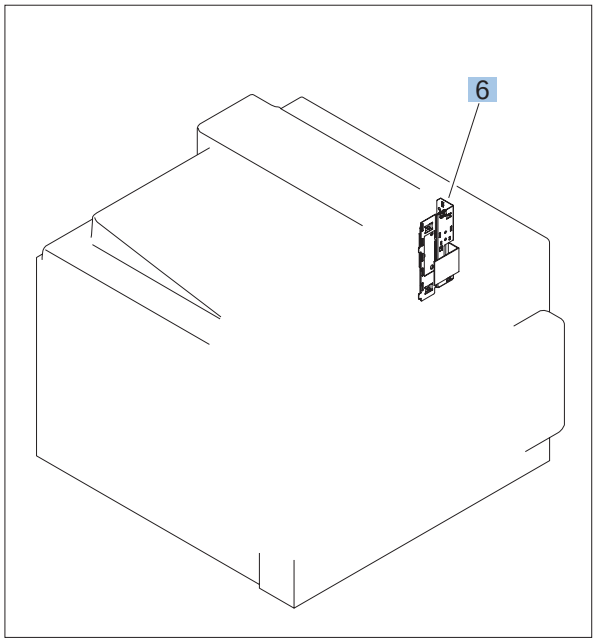

Table 4-22 PCAs

Ref	Description	Part number	Qty
1	DC controller PCA assembly	RM1-5758-000CN	1
2	Low voltage power supply PCA assembly, 110V	RM1-5763-000CN	1
2	Low voltage power supply PCA assembly, 220V	RM1-5764-000CN	1
3	High voltage power supply PCA, lower (includes FFC; DCC to HVPS lower)	RM1-5779-000CN	1
4	High voltage power supply, upper	RM1-5781-000CN	1
6	Inner connecting PCA assembly	RM1-5636-020CN	1
7	Toner remain PCA assembly	RM1-5771-020CN	4
8	Formatter kit (exchange; includes instructions)	CC493-69001	1

Assessories

Paper feeders

Figure 4-19 Paper feeders

1x500

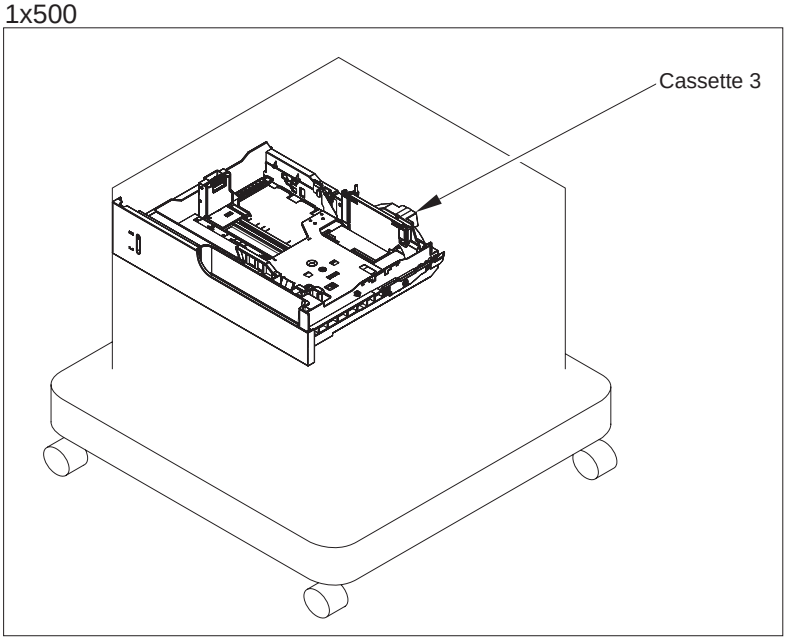

3x500

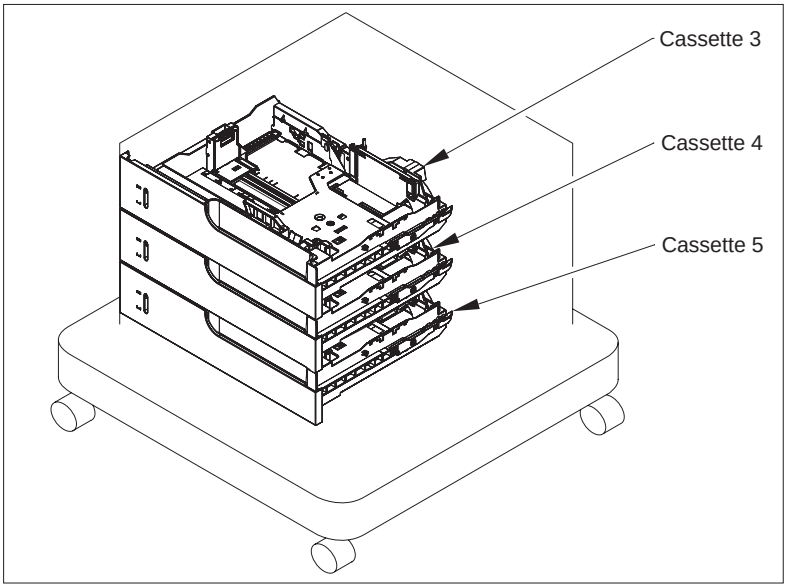

Table 4-23 Paper feeders

Ref	Description	Part number	Qty
NA	Cassette	RM1-5928-000CN	NA

Paper feeder external covers, panels, and doors

Figure 4-20 Paper feeder external covers, panels, and doors

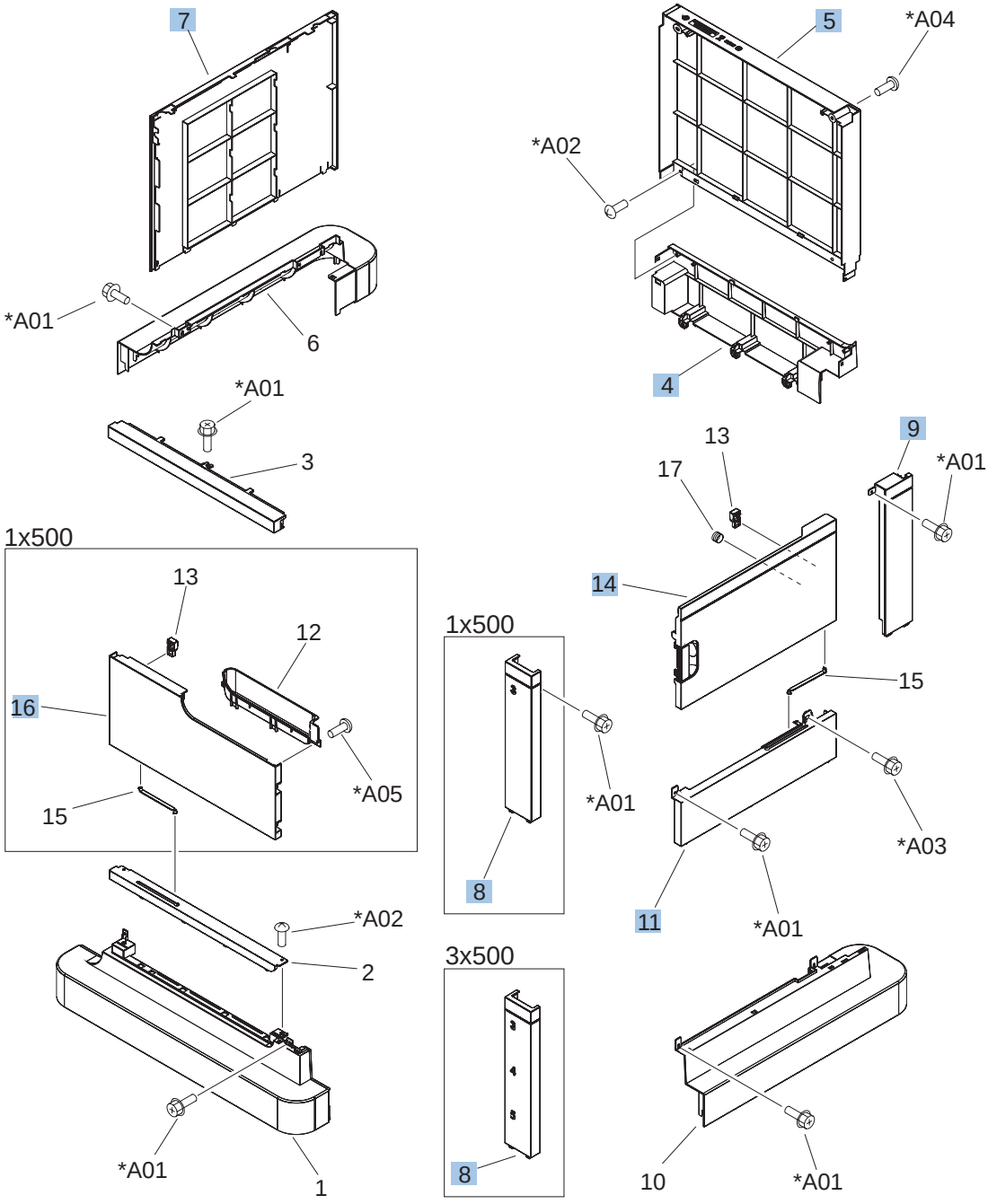

Table 4-24 Paper feeder external covers, panels, and doors

Ref	Description	Part number	Qty
4	Cover, rear lower	RC2-5378-000CN	1
5	Cover, rear	RC2-5379-000CN	1
7	Cover, left	RC2-5393-000CN	1
8	Cover, right front, 1x500	RC2-5356-000CN	1
8	Cover, right front, 3x500	RC2-5357-000CN	1
9	Cover, right rear	RC2-5380-000CN	1
11	Cover, right center	RC2-5394-000CN	1
14	Right door assembly 3x500	RM1-5937-000CN	1
14	Right door assembly 1x500	RM1-5936-000CN	1
16	Door, stock, 1x500	RC2-5377-000CN	1

1 X 500 paper feeder main body

Figure 4-21 1 X 500 paper feeder main body

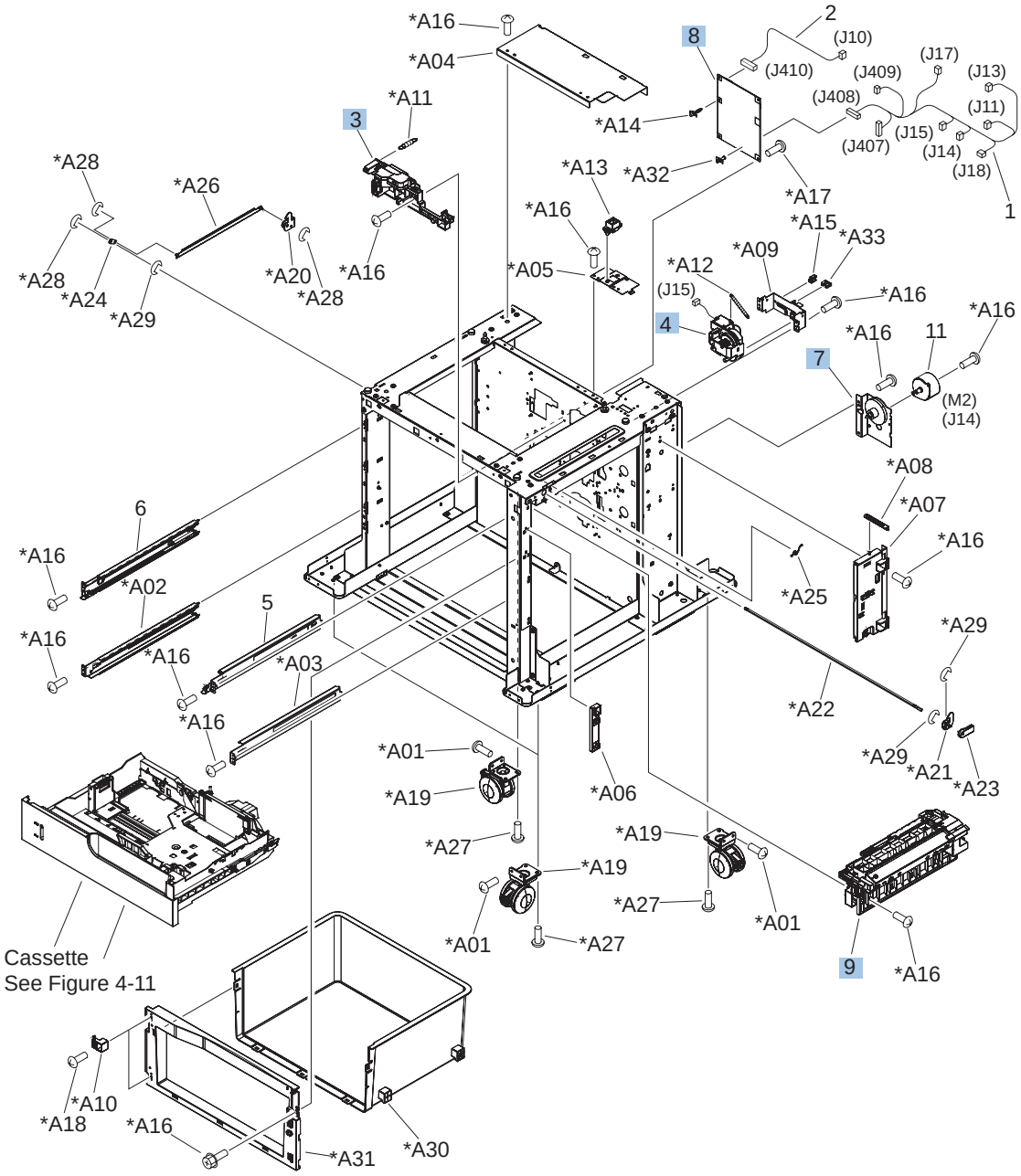

Table 4-25 1 X 500 paper feeder main body

Ref	Description	Part number	Qty
3	Lifter base assembly	RM1-5913-000CN	1
4	Lifter assembly	RM1-5914-000CN	1
7	Paper pickup drive assembly, 1x500	RM1-5934-000CN	1
8	Feeder PCA assembly, 1x500	RM1-5854-000CN	1
9	Paper pickup assembly	RM1-5929-000CN	1

3 X 500 paper feeder main body

Figure 4-22 3 X 500 paper feeder main body

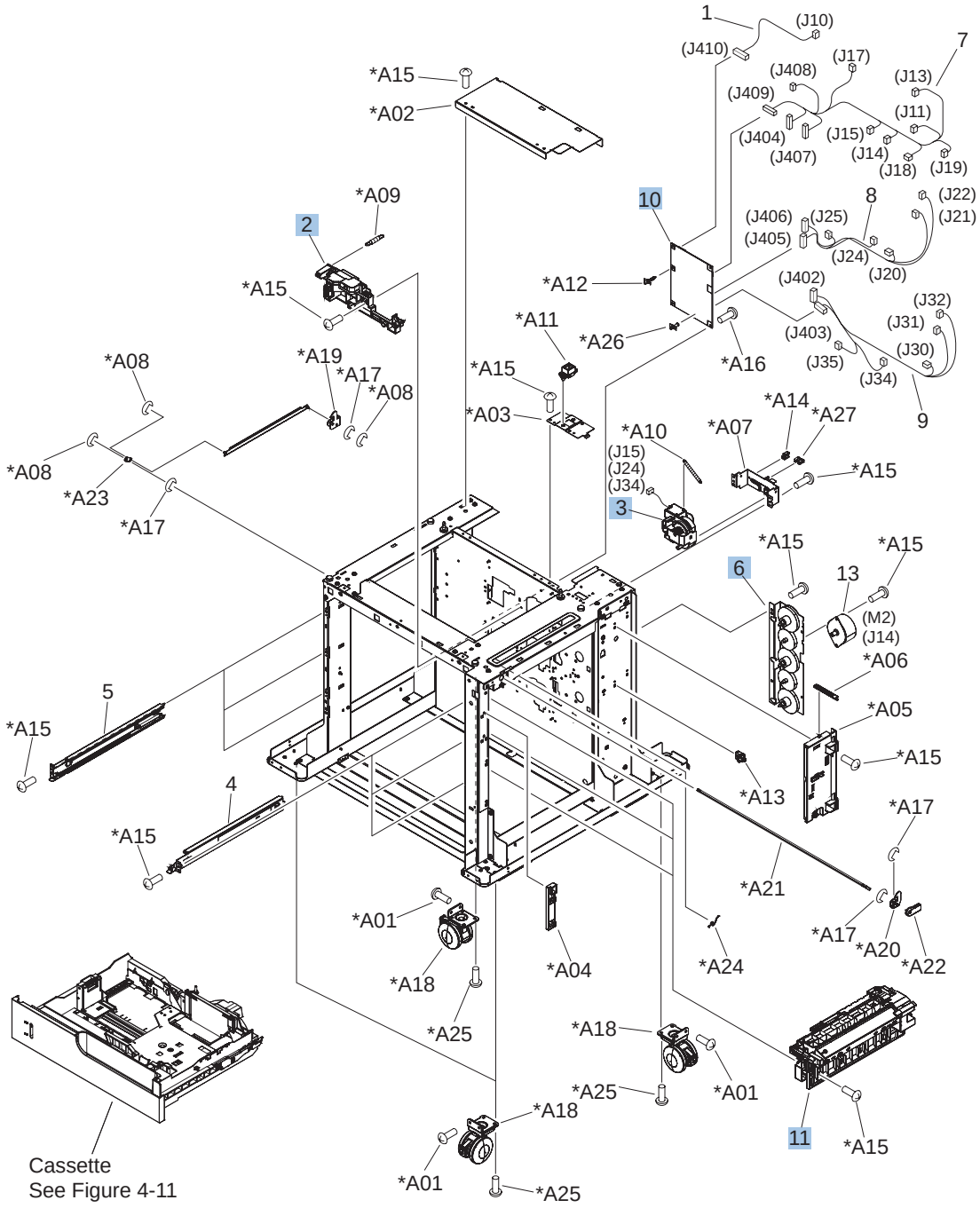

Table 4-26 3 X 500 paper feeder main body

Ref	Description	Part number	Qty
2	Lifter base assembly	RM1-5913-000CN	1
3	Lifter assembly	RM1-5914-000CN	1
6	Paper pickup drive assembly 3x500	RM1-5935-000CN	1
10	Feeder PCA assembly 3x500	RM1-5958-000CN	1
11	Paper pickup assembly	RM1-5929-000CN	3

Alphabetical parts list

Table 4-27 Alphabetical parts list

Description	Part number	Table and page
Arm, door link supporting, right	RC2-4055-000CN	Internal components (5 of 7) on page 447
Bushing	RC2-9719-000CN	Internal components (2 of 7) on page 441
Bushing	RC2-4470-000CN	Internal components (2 of 7) on page 441
Cable cover assembly	RM1-6695-000CN	Internal components (5 of 7) on page 447
Cable, flexible flat, H.V.T.	RK2-2603-000CN	Internal components 7 of 7 on page 451
Cartridge fan	RK2-2418-000CN	Internal components 6 of 7 on page 449
Cartridge fan assembly	RM1-5499-000CN	Internal components (4 of 7) on page 445
Cassette	RM1-5928-000CN	Cassette on page 453
Cassette	RM1-5928-000CN	Paper feeders on page 469
Cassette guide assembly	RM1-5504-000CN	Internal components (5 of 7) on page 447
Cassette rail left assembly	RM1-6196-000CN	Internal components (3 of 7) on page 443
Cassette rail right assembly	RM1-6195-000CN	Internal components (3 of 7) on page 443
Connecting cable assembly	RM1-5799-000CN	Internal components 7 of 7 on page 451
Connecting cable assembly	RM1-5811-000CN	Internal components 7 of 7 on page 451
Connecting cable assembly	RM1-5812-000CN	Internal components 7 of 7 on page 451
Contact assembly	RM1-5502-000CN	Internal components 7 of 7 on page 451
Control panel cable assembly	RM1-5814-000CN	Internal components 7 of 7 on page 451
Control-panel assembly	RM1-5786-000CN	External covers, panels, and doors; on page 433
Cover	RC2-4403-000CN	Internal components (2 of 7) on page 441
Cover	RC2-5962-000CN	Internal components (2 of 7) on page 441
Cover	RC2-4308-000CN	Internal components (3 of 7) on page 443

Table 4-27 Alphabetical parts list (continued)

Description	Part number	Table and page
Cover, inner	RM1-5520-000CN	External covers, panels, and doors; on page 433
Cover, inner	RC2-3981-000CN	Internal components (5 of 7) on page 447
Cover, left	RC2-5393-000CN	Paper feeder external covers, panels, and doors on page 471
Cover, left lower	RC2-4300-000CN	External covers, panels, and doors; on page 433
Cover, left rear	RC2-8213-000CN	External covers, panels, and doors; on page 433
Cover, left upper	RC2-4270-000CN	External covers, panels, and doors; on page 433
Cover, M.P. cross member	RC2-9189-000CN	Internal components (5 of 7) on page 447
Cover, M.P. crossmember R	RC2-4747-000CN	Right door assembly on page 435
Cover, rear	RC2-5379-000CN	Paper feeder external covers, panels, and doors on page 471
Cover, rear lower	RC2-5378-000CN	Paper feeder external covers, panels, and doors on page 471
Cover, right center	RC2-5394-000CN	Paper feeder external covers, panels, and doors on page 471
Cover, right front	RC2-4272-000CN	External covers, panels, and doors; on page 433
Cover, right front, 1x500	RC2-5356-000CN	Paper feeder external covers, panels, and doors on page 471
Cover, right front, 3x500	RC2-5357-000CN	Paper feeder external covers, panels, and doors on page 471
Cover, right rear	RC2-4273-000CN	External covers, panels, and doors; on page 433
Cover, right rear	RC2-5380-000CN	Paper feeder external covers, panels, and doors on page 471
Cover, roller	RC2-4483-000CN	Internal components (5 of 7) on page 447
Cover, upper	RC2-4276-000CN	External covers, panels, and doors; on page 433
Crg. Guide lower assembly	RM1-5486-000CN	Internal components (2 of 7) on page 441
DC controller PCA assembly	RM1-5758-000CN	PCAs on page 467

Table 4-27 Alphabetical parts list (continued)

Description	Part number	Table and page
Density detect assembly	RM1-5641-000CN	Internal components (5 of 7) on page 447
Developing disengaging motor	RK2-2415-000CN	Internal components 6 of 7 on page 449
Door, stock, 1x500	RC2-5377-000CN	Paper feeder external covers, panels, and doors on page 471
Duplex delivery assembly kit	CC493-67919	Delivery assembly on page 463
Duplexing cable assembly, duplex	RM1-5803-000CN	Internal components 7 of 7 on page 451
Duplexing drive assembly	RM1-5546-000CN	Internal components 6 of 7 on page 449
Duplexing guide assembly, duplex	RM1-5531-000CN	Internal components (1 of 7) on page 439
Face-down tray assembly	RM1-5494-000CN	External covers, panels, and doors; on page 433
Fan	RK2-2577-000CN	Internal components 7 of 7 on page 451
Fan cable assembly	RM1-5821-000CN	Internal components 7 of 7 on page 451
Feed cable assembly	RM1-5804-000CN	Internal components 7 of 7 on page 451
Feeder PCA assembly 3x500	RM1-5958-000CN	3 X 500 paper feeder main body on page 475
Feeder PCA assembly, 1x500	RM1-5854-000CN	1 X 500 paper feeder main body on page 473
Flat flexible cable (DCC to HVPS lower)	RK2-2604-000CN	Internal components 6 of 7 on page 449
Flexible flat cable assembly (includes two FFC; DCC to laser/scanner)	RM1-5498-000CN	Internal components 6 of 7 on page 449
Formatter kit (exchange; includes instructions)	CC493-69001	PCAs on page 467
Front door assembly	RM1-5506-000CN	Front door assembly on page 437
Front inner cover lower assembly	RM1-5598-000CN	Internal components (3 of 7) on page 443
Front inner cover upper assembly	RM1-5495-000CN	Internal components (3 of 7) on page 443
Front light guide assembly	RM1-5492-000CN	Internal components (4 of 7) on page 445
Fuser 110 V assembly kit (includes instructions)	CC493-67911	Fuser assembly on page 465
Fuser 220 V assembly kit (includes instructions)	CC493-67912	Fuser assembly on page 465
Fuser drive assembly, duplex	RM1-5656-000CN	Internal components 6 of 7 on page 449

Table 4-27 Alphabetical parts list (continued)

Description	Part number	Table and page
Fuser drive assembly, simplex	RM1-6702-000CN	Internal components 6 of 7 on page 449
Grip, left front	RC2-4268-000CN	External covers, panels, and doors; on page 433
Grip, left rear	RC2-4269-000CN	External covers, panels, and doors; on page 433
Guide	RC2-4527-000CN	Internal components (5 of 7) on page 447
Guide, cassette option	RC2-4741-000CN	Internal components (5 of 7) on page 447
Guide, paper feed, simplex	RC2-4566-000CN	Internal components (1 of 7) on page 439
H.V. power supply cable assembly	RM1-5724-000CN	Internal components 7 of 7 on page 451
High voltage holder assembly	RM1-6694-000CN	Internal components (3 of 7) on page 443
High voltage power supply PCA, lower (includes FFC; DCC to HVPS lower)	RM1-5779-000CN	PCAs on page 467
High voltage power supply, upper	RM1-5781-000CN	PCAs on page 467
Hinge, front door	RC2-4291-000CN	Internal components (3 of 7) on page 443
Hinge, front door	RC2-4292-000CN	Internal components (3 of 7) on page 443
Holder, cable	RC2-3997-000CN	Internal components (1 of 7) on page 439
Holder, duct cable	RC2-8239-000CN	Internal components (5 of 7) on page 447
Holder, right door handle	RC2-4573-000CN	Internal components (1 of 7) on page 439
Inner connecting PCA assembly	RM1-5636-020CN	PCAs on page 467
Interlock assembly	RM1-5496-000CN	Internal components (3 of 7) on page 443
Interlock switch cable assembly	RM1-5816-000CN	Internal components 7 of 7 on page 451
Intermediate transfer belt kit (includes instructions, ITB, and T2 roller)	CC493-67909	Internal components (4 of 7) on page 445
ITB motor assembly	RM1-5777-000CN	Internal components 6 of 7 on page 449
Laser scanner kit (includes instructions and one scanner assy.)	CC493-67914	Internal components (4 of 7) on page 445
Lever, CRG. lock	RC2-3986-000CN	Internal components (2 of 7) on page 441
Lever, crg. pressure, front	RC2-3983-020CN	Internal components (3 of 7) on page 443

Table 4-27 Alphabetical parts list (continued)

Description	Part number	Table and page
Lever, shutter	RC2-4415-000CN	Internal components (3 of 7) on page 443
Lifter assembly	RM1-5914-000CN	Internal components 6 of 7 on page 449
Lifter assembly	RM1-5914-000CN	1 X 500 paper feeder main body on page 473
Lifter assembly	RM1-5914-000CN	3 X 500 paper feeder main body on page 475
Lifter base assembly	RM1-5913-000CN	Internal components (2 of 7) on page 441
Lifter base assembly	RM1-5913-000CN	1 X 500 paper feeder main body on page 473
Lifter base assembly	RM1-5913-000CN	3 X 500 paper feeder main body on page 475
Link, right door	RC2-4726-000CN	Internal components (5 of 7) on page 447
Low voltage power supply PCA assembly, 110V	RM1-5763-000CN	PCAs on page 467
Low voltage power supply PCA assembly, 220V	RM1-5764-000CN	PCAs on page 467
Lower main cable assembly	RM1-5801-000CN	Internal components 7 of 7 on page 451
Main DC motor assembly	RM1-5521-000CN	Internal components 6 of 7 on page 449
Main drive assembly kit (includes instructions)	CC493-67915	Internal components 6 of 7 on page 449
Paper delivery fan assembly	RM1-5501-000CN	Internal components (1 of 7) on page 439
Paper delivery fan duct assembly	RM1-5583-000CN	Internal components (1 of 7) on page 439
Paper feed roller	RM1-0037-020CN	Paper pickup assembly on page 455
Paper feed roller assembly	RM1-5525-000CN	Internal components (5 of 7) on page 447
Paper pickup assembly	RM1-5919-000CN	Paper pickup assembly on page 455
Paper pickup assembly	RM1-5929-000CN	1 X 500 paper feeder main body on page 473
Paper pickup assembly	RM1-5929-000CN	3 X 500 paper feeder main body on page 475
Paper pickup drive assembly	RM1-5549-000CN	Internal components 6 of 7 on page 449
Paper pickup drive assembly 3x500	RM1-5935-000CN	3 X 500 paper feeder main body on page 475
Paper pickup drive assembly, 1x500	RM1-5934-000CN	1 X 500 paper feeder main body on page 473

Table 4-27 Alphabetical parts list (continued)

Description	Part number	Table and page
Photo interrupter	WG8-5696-000CN	Internal components (3 of 7) on page 443
Photo interrupter	WG8-5696-000CN	Internal components (4 of 7) on page 445
Photo interrupter, TLP1243	WG8-5696-000CN	Internal components (1 of 7) on page 439
Pickup roller (Tray 1) kit (includes instructions)	CC493–67906	Tray 1 paper pickup assembly on page 457
Position detect assembly	RM1-5500-000CN	Internal components (4 of 7) on page 445
Power switch assembly	RM1-5582-000CN	Internal components (3 of 7) on page 443
Rear cover assembly	RM1-5508-000CN	External covers, panels, and doors; on page 433
Registration assembly kit, duplex (includes instructions)	CC493-67917	Registration assembly on page 459
Registration assembly kit, simplex (includes instructions)	CC493-67916	Registration assembly on page 459
Right door assembly	RM1-5509-000CN	Right door assembly on page 435
Right door assembly 1x500	RM1-5936-000CN	Paper feeder external covers, panels, and doors on page 471
Right door assembly 3x500	RM1-5937-000CN	Paper feeder external covers, panels, and doors on page 471
Right handle cover assembly	RM1-5507-000CN	External covers, panels, and doors; on page 433
Rod, paper delivery fan	RC2-4070-000CN	Internal components (1 of 7) on page 439
Roller, paper pickup	RL1-2099-000CN	Paper pickup assembly on page 455
Secondary transfer assembly, duplex kit (includes shaft-support clip; # 3 Figure 4–8)	CC493-67901	Secondary Transfer assembly on page 461
Secondary transfer assembly, simplex kit (includes shaft-support clip; # 3 Figure 4–8)	CC493-67902	Secondary Transfer assembly on page 461
Secondary transfer roller assembly kit (includes instructions)	CC493-67908	Secondary Transfer assembly on page 461
Sensor cable assembly	RM1-5815-000CN	Internal components 7 of 7 on page 451
Separation pad (Tray 1)	RL1-1937-000CN	Tray 1 paper pickup assembly on page 457
Shaft support (included in secondary transfer kit; see Figure 4–15)	RC2-4162-000CN	Internal components (5 of 7) on page 447

Table 4-27 Alphabetical parts list (continued)

Description	Part number	Table and page
Shutter arm assembly	RM1-5585-000CN	Internal components (2 of 7) on page 441
Shutter arm assembly	RM1-5586-000CN	Internal components (2 of 7) on page 441
Shutter assembly	RM1-5488-000CN	Internal components (2 of 7) on page 441
Shutter assembly	RM1-5489-000CN	Internal components (2 of 7) on page 441
Simplex delivery assembly kit	CC493-67918	Delivery assembly on page 463
Spacer	RC2-4514-000CN	Internal components (5 of 7) on page 447
Spring, compression	RU6-2310-000CN	Internal components (1 of 7) on page 439
Spring, compression	RU6-2316-000CN	Internal components (3 of 7) on page 443
Spring, grounding	RC2-4469-000CN	Internal components (2 of 7) on page 441
Spring, grounding	RU6-2237-000CN	Internal components (3 of 7) on page 443
Spring, tension	RU6-2236-000CN	Internal components (3 of 7) on page 443
Spring, tension	RU6-2235-000CN	Internal components (4 of 7) on page 445
Spring, tension	RU6-2376-000CN	Internal components (4 of 7) on page 445
Spring, tension	RU6-2468-000CN	Internal components 6 of 7 on page 449
Spring, torsion	RU6-2247-000CN	Internal components (2 of 7) on page 441
Switch	WC4-5303-000CN	Internal components (3 of 7) on page 443
Switch cable assembly	RM1-5807-000CN	Internal components 7 of 7 on page 451
Switch, push	WC2-5637-000CN	Internal components (3 of 7) on page 443
Switch, push	WC2-5637-000CN	Internal components 7 of 7 on page 451
Toner remain PCA assembly	RM1-5771-020CN	PCAs on page 467
Tray, face-down swing	RC2-4547-000CN	External covers, panels, and doors; on page 433
Tray, waste toner catch	RC2-4218-000CN	Internal components (2 of 7) on page 441

Table 4-27 Alphabetical parts list (continued)

Description	Part number	Table and page
Upper main cable assembly	RM1-5800-000CN	Internal components 7 of 7 on page 451
Waste toner collection kit (includes instructions and wipe)	CC493-67913	Internal components (3 of 7) on page 443
Waste toner detect assembly	RM1-5545-000CN	Internal components (3 of 7) on page 443
Waste toner duct assembly	RM1-5519-000CN	Internal components (3 of 7) on page 443
Waste toner motor assembly	RM1-5605-000CN	Internal components (4 of 7) on page 445
Waste toner paper feed assembly	RM1-5584-000CN	Internal components (3 of 7) on page 443

Numerical parts list

Table 4-28 Numerical parts list

Part number	Description	Table and page
CC493-67901	Secondary transfer assembly, duplex kit (includes shaft-support clip; # 3 Figure 4–8)	Secondary Transfer assembly on page 461
CC493-67902	Secondary transfer assembly, simplex kit (includes shaft-support clip; # 3 Figure 4–8)	Secondary Transfer assembly on page 461
CC493-67908	Secondary transfer roller assembly kit (includes instructions)	Secondary Transfer assembly on page 461
CC493-67909	Intermediate transfer belt kit (includes instructions, ITB, and T2 roller)	Internal components (4 of 7) on page 445
CC493-67911	Fuser 110 V assembly kit (includes instructions)	Fuser assembly on page 465
CC493-67912	Fuser 220 V assembly kit (includes instructions)	Fuser assembly on page 465
CC493-67913	Waste toner collection kit (includes instructions and wipe)	Internal components (3 of 7) on page 443
CC493-67914	Laser scanner kit (includes instructions and one scanner assy.)	Internal components (4 of 7) on page 445
CC493-67915	Main drive assembly kit (includes instructions)	Internal components 6 of 7 on page 449
CC493-67916	Registration assembly kit, simplex (includes instructions)	Registration assembly on page 459
CC493-67917	Registration assembly kit, duplex (includes instructions)	Registration assembly on page 459
CC493-67918	Simplex delivery assembly kit	Delivery assembly on page 463
CC493-67919	Duplex delivery assembly kit	Delivery assembly on page 463
CC493-69001	Formatter kit (exchange; includes instructions)	PCAs on page 467
CC493–67906	Pickup roller (Tray 1) kit (includes instructions)	Tray 1 paper pickup assembly on page 457
RC2-3981-000CN	Cover, inner	Internal components (5 of 7) on page 447
RC2-3983-020CN	Lever, crg. pressure, front	Internal components (3 of 7) on page 443
RC2-3986-000CN	Lever, CRG. lock	Internal components (2 of 7) on page 441
RC2-3997-000CN	Holder, cable	Internal components (1 of 7) on page 439
RC2-4055-000CN	Arm, door link supporting, right	Internal components (5 of 7) on page 447
RC2-4070-000CN	Rod, paper delivery fan	Internal components (1 of 7) on page 439
RC2-4162-000CN	Shaft support (included in secondary transfer kit; see Figure 4–15)	Internal components (5 of 7) on page 447

Table 4-28 Numerical parts list (continued)

Part number	Description	Table and page
RC2-4218-000CN	Tray, waste toner catch	Internal components (2 of 7) on page 441
RC2-4268-000CN	Grip, left front	External covers, panels, and doors; on page 433
RC2-4269-000CN	Grip, left rear	External covers, panels, and doors; on page 433
RC2-4270-000CN	Cover, left upper	External covers, panels, and doors; on page 433
RC2-4272-000CN	Cover, right front	External covers, panels, and doors; on page 433
RC2-4273-000CN	Cover, right rear	External covers, panels, and doors; on page 433
RC2-4276-000CN	Cover, upper	External covers, panels, and doors; on page 433
RC2-4291-000CN	Hinge, front door	Internal components (3 of 7) on page 443
RC2-4292-000CN	Hinge, front door	Internal components (3 of 7) on page 443
RC2-4300-000CN	Cover, left lower	External covers, panels, and doors; on page 433
RC2-4308-000CN	Cover	Internal components (3 of 7) on page 443
RC2-4403-000CN	Cover	Internal components (2 of 7) on page 441
RC2-4415-000CN	Lever, shutter	Internal components (3 of 7) on page 443
RC2-4469-000CN	Spring, grounding	Internal components (2 of 7) on page 441
RC2-4470-000CN	Bushing	Internal components (2 of 7) on page 441
RC2-4483-000CN	Cover, roller	Internal components (5 of 7) on page 447
RC2-4514-000CN	Spacer	Internal components (5 of 7) on page 447
RC2-4527-000CN	Guide	Internal components (5 of 7) on page 447
RC2-4547-000CN	Tray, face-down swing	External covers, panels, and doors; on page 433
RC2-4566-000CN	Guide, paper feed, simplex	Internal components (1 of 7) on page 439
RC2-4573-000CN	Holder, right door handle	Internal components (1 of 7) on page 439
RC2-4726-000CN	Link, right door	Internal components (5 of 7) on page 447

Table 4-28 Numerical parts list (continued)

Part number	Description	Table and page
RC2-4741-000CN	Guide, cassette option	Internal components (5 of 7) on page 447
RC2-4747-000CN	Cover, M.P. crossmember R	Right door assembly on page 435
RC2-5356-000CN	Cover, right front, 1x500	Paper feeder external covers, panels, and doors on page 471
RC2-5357-000CN	Cover, right front, 3x500	Paper feeder external covers, panels, and doors on page 471
RC2-5377-000CN	Door, stock, 1x500	Paper feeder external covers, panels, and doors on page 471
RC2-5378-000CN	Cover, rear lower	Paper feeder external covers, panels, and doors on page 471
RC2-5379-000CN	Cover, rear	Paper feeder external covers, panels, and doors on page 471
RC2-5380-000CN	Cover, right rear	Paper feeder external covers, panels, and doors on page 471
RC2-5393-000CN	Cover, left	Paper feeder external covers, panels, and doors on page 471
RC2-5394-000CN	Cover, right center	Paper feeder external covers, panels, and doors on page 471
RC2-5962-000CN	Cover	Internal components (2 of 7) on page 441
RC2-8213-000CN	Cover, left rear	External covers, panels, and doors; on page 433
RC2-8239-000CN	Holder, duct cable	Internal components (5 of 7) on page 447
RC2-9189-000CN	Cover, M.P. cross member	Internal components (5 of 7) on page 447
RC2-9719-000CN	Bushing	Internal components (2 of 7) on page 441
RK2-2415-000CN	Developing disengaging motor	Internal components 6 of 7 on page 449
RK2-2418-000CN	Cartridge fan	Internal components 6 of 7 on page 449
RK2-2577-000CN	Fan	Internal components 7 of 7 on page 451
RK2-2603-000CN	Cable, flexible flat, H.V.T.	Internal components 7 of 7 on page 451

Table 4-28 Numerical parts list (continued)

Part number	Description	Table and page
RK2-2604-000CN	Flat flexible cable (DCC to HVPS lower)	Internal components 6 of 7 on page 449
RL1-1937-000CN	Separation pad (Tray 1)	Tray 1 paper pickup assembly on page 457
RL1-2099-000CN	Roller, paper pickup	Paper pickup assembly on page 455
RM1-0037-020CN	Paper feed roller	Paper pickup assembly on page 455
RM1-5486-000CN	Crg. Guide lower assembly	Internal components (2 of 7) on page 441
RM1-5488-000CN	Shutter assembly	Internal components (2 of 7) on page 441
RM1-5489-000CN	Shutter assembly	Internal components (2 of 7) on page 441
RM1-5492-000CN	Front light guide assembly	Internal components (4 of 7) on page 445
RM1-5494-000CN	Face-down tray assembly	External covers, panels, and doors; on page 433
RM1-5495-000CN	Front inner cover upper assembly	Internal components (3 of 7) on page 443
RM1-5496-000CN	Interlock assembly	Internal components (3 of 7) on page 443
RM1-5498-000CN	Flexible flat cable assembly (includes two FFC; DCC to laser/scanner)	Internal components 6 of 7 on page 449
RM1-5499-000CN	Cartridge fan assembly	Internal components (4 of 7) on page 445
RM1-5500-000CN	Position detect assembly	Internal components (4 of 7) on page 445
RM1-5501-000CN	Paper delivery fan assembly	Internal components (1 of 7) on page 439
RM1-5502-000CN	Contact assembly	Internal components 7 of 7 on page 451
RM1-5504-000CN	Cassette guide assembly	Internal components (5 of 7) on page 447
RM1-5506-000CN	Front door assembly	Front door assembly on page 437
RM1-5507-000CN	Right handle cover assembly	External covers, panels, and doors; on page 433
RM1-5508-000CN	Rear cover assembly	External covers, panels, and doors; on page 433
RM1-5509-000CN	Right door assembly	Right door assembly on page 435
RM1-5519-000CN	Waste toner duct assembly	Internal components (3 of 7) on page 443

Table 4-28 Numerical parts list (continued)

Part number	Description	Table and page
RM1-5520-000CN	Cover, inner	External covers, panels, and doors; on page 433
RM1-5521-000CN	Main DC motor assembly	Internal components 6 of 7 on page 449
RM1-5525-000CN	Paper feed roller assembly	Internal components (5 of 7) on page 447
RM1-5531-000CN	Duplexing guide assembly, duplex	Internal components (1 of 7) on page 439
RM1-5545-000CN	Waste toner detect assembly	Internal components (3 of 7) on page 443
RM1-5546-000CN	Duplexing drive assembly	Internal components 6 of 7 on page 449
RM1-5549-000CN	Paper pickup drive assembly	Internal components 6 of 7 on page 449
RM1-5582-000CN	Power switch assembly	Internal components (3 of 7) on page 443
RM1-5583-000CN	Paper delivery fan duct assembly	Internal components (1 of 7) on page 439
RM1-5584-000CN	Waste toner paper feed assembly	Internal components (3 of 7) on page 443
RM1-5585-000CN	Shutter arm assembly	Internal components (2 of 7) on page 441
RM1-5586-000CN	Shutter arm assembly	Internal components (2 of 7) on page 441
RM1-5598-000CN	Front inner cover lower assembly	Internal components (3 of 7) on page 443
RM1-5605-000CN	Waste toner motor assembly	Internal components (4 of 7) on page 445
RM1-5636-020CN	Inner connecting PCA assembly	PCAs on page 467
RM1-5641-000CN	Density detect assembly	Internal components (5 of 7) on page 447
RM1-5656-000CN	Fuser drive assembly, duplex	Internal components 6 of 7 on page 449
RM1-5724-000CN	H.V. power supply cable assembly	Internal components 7 of 7 on page 451
RM1-5758-000CN	DC controller PCA assembly	PCAs on page 467
RM1-5763-000CN	Low voltage power supply PCA assembly, 110V	PCAs on page 467
RM1-5764-000CN	Low voltage power supply PCA assembly, 220V	PCAs on page 467
RM1-5771-020CN	Toner remain PCA assembly	PCAs on page 467
RM1-5777-000CN	ITB motor assembly	Internal components 6 of 7 on page 449
RM1-5779-000CN	High voltage power supply PCA, lower (includes FFC; DCC to HVPS lower)	PCAs on page 467

Table 4-28 Numerical parts list (continued)

Part number	Description	Table and page
RM1-5781-000CN	High voltage power supply, upper	PCAs on page 467
RM1-5786-000CN	Control-panel assembly	External covers, panels, and doors; on page 433
RM1-5799-000CN	Connecting cable assembly	Internal components 7 of 7 on page 451
RM1-5800-000CN	Upper main cable assembly	Internal components 7 of 7 on page 451
RM1-5801-000CN	Lower main cable assembly	Internal components 7 of 7 on page 451
RM1-5803-000CN	Duplexing cable assembly, duplex	Internal components 7 of 7 on page 451
RM1-5804-000CN	Feed cable assembly	Internal components 7 of 7 on page 451
RM1-5807-000CN	Switch cable assembly	Internal components 7 of 7 on page 451
RM1-5811-000CN	Connecting cable assembly	Internal components 7 of 7 on page 451
RM1-5812-000CN	Connecting cable assembly	Internal components 7 of 7 on page 451
RM1-5814-000CN	Control panel cable assembly	Internal components 7 of 7 on page 451
RM1-5815-000CN	Sensor cable assembly	Internal components 7 of 7 on page 451
RM1-5816-000CN	Interlock switch cable assembly	Internal components 7 of 7 on page 451
RM1-5821-000CN	Fan cable assembly	Internal components 7 of 7 on page 451
RM1-5854-000CN	Feeder PCA assembly, 1x500	1 X 500 paper feeder main body on page 473
RM1-5913-000CN	Lifter base assembly	Internal components (2 of 7) on page 441
RM1-5913-000CN	Lifter base assembly	1 X 500 paper feeder main body on page 473
RM1-5913-000CN	Lifter base assembly	3 X 500 paper feeder main body on page 475
RM1-5914-000CN	Lifter assembly	Internal components 6 of 7 on page 449
RM1-5914-000CN	Lifter assembly	1 X 500 paper feeder main body on page 473
RM1-5914-000CN	Lifter assembly	3 X 500 paper feeder main body on page 475
RM1-5919-000CN	Paper pickup assembly	Paper pickup assembly on page 455
RM1-5928-000CN	Cassette	Cassette on page 453

Table 4-28 Numerical parts list (continued)

Part number	Description	Table and page
RM1-5928-000CN	Cassette	Paper feeders on page 469
RM1-5929-000CN	Paper pickup assembly	1 X 500 paper feeder main body on page 473
RM1-5929-000CN	Paper pickup assembly	3 X 500 paper feeder main body on page 475
RM1-5934-000CN	Paper pickup drive assembly, 1x500	1 X 500 paper feeder main body on page 473
RM1-5935-000CN	Paper pickup drive assembly 3x500	3 X 500 paper feeder main body on page 475
RM1-5936-000CN	Right door assembly 1x500	Paper feeder external covers, panels, and doors on page 471
RM1-5937-000CN	Right door assembly 3x500	Paper feeder external covers, panels, and doors on page 471
RM1-5958-000CN	Feeder PCA assembly 3x500	3 X 500 paper feeder main body on page 475
RM1-6195-000CN	Cassette rail right assembly	Internal components (3 of 7) on page 443
RM1-6196-000CN	Cassette rail left assembly	Internal components (3 of 7) on page 443
RM1-6694-000CN	High voltage holder assembly	Internal components (3 of 7) on page 443
RM1-6695-000CN	Cable cover assembly	Internal components (5 of 7) on page 447
RM1-6702-000CN	Fuser drive assembly, simplex	Internal components 6 of 7 on page 449
RU6-2235-000CN	Spring, tension	Internal components (4 of 7) on page 445
RU6-2236-000CN	Spring, tension	Internal components (3 of 7) on page 443
RU6-2237-000CN	Spring, grounding	Internal components (3 of 7) on page 443
RU6-2247-000CN	Spring, torsion	Internal components (2 of 7) on page 441
RU6-2310-000CN	Spring, compression	Internal components (1 of 7) on page 439
RU6-2316-000CN	Spring, compression	Internal components (3 of 7) on page 443
RU6-2376-000CN	Spring, tension	Internal components (4 of 7) on page 445
RU6-2468-000CN	Spring, tension	Internal components 6 of 7 on page 449
WC2-5637-000CN	Switch, push	Internal components (3 of 7) on page 443

Table 4-28 Numerical parts list (continued)

Part number	Description	Table and page
WC2-5637-000CN	Switch, push	Internal components 7 of 7 on page 451
WC4-5303-000CN	Switch	Internal components (3 of 7) on page 443
WG8-5696-000CN	Photo interrupter, TLP1243	Internal components (1 of 7) on page 439
WG8-5696-000CN	Photo interrupter	Internal components (3 of 7) on page 443
WG8-5696-000CN	Photo interrupter	Internal components (4 of 7) on page 445

A Service and support

- Hewlett-Packard limited warranty statement
- HP's Premium Protection Warranty: LaserJet print cartridge limited warranty statement
- HP Color LaserJet Fuser Kit Limited Warranty Statement
- End User License Agreement
- Customer self-repair warranty service
- Customer support

Hewlett-Packard limited warranty statement

HP PRODUCT	DURATION OF LIMITED WARRANTY
HP Color LaserJet CP4025n, CP4025dn, CP4525n, CP4525dn, CP4525xh	One-year on-site warranty

HP warrants to you, the end-user customer, that HP hardware and accessories will be free from defects in materials and workmanship after the date of purchase, for the period specified above. If HP receives notice of such defects during the warranty period, HP will, at its option, either repair or replace products which prove to be defective. Replacement products may be either new or equivalent in performance to new.

HP warrants to you that HP software will not fail to execute its programming instructions after the date of purchase, for the period specified above, due to defects in material and workmanship when properly installed and used. If HP receives notice of such defects during the warranty period, HP will replace software which does not execute its programming instructions due to such defects.

HP does not warrant that the operation of HP products will be uninterrupted or error free. If HP is unable, within a reasonable time, to repair or replace any product to a condition as warranted, you will be entitled to a refund of the purchase price upon prompt return of the product.

HP products may contain remanufactured parts equivalent to new in performance or may have been subject to incidental use.

Warranty does not apply to defects resulting from (a) improper or inadequate maintenance or calibration, (b) software, interfacing, parts or supplies not supplied by HP, (c) unauthorized modification or misuse, (d) operation outside of the published environmental specifications for the product, or (e) improper site preparation or maintenance.

TO THE EXTENT ALLOWED BY LOCAL LAW, THE ABOVE WARRANTIES ARE EXCLUSIVE AND NO OTHER WARRANTY OR CONDITION, WHETHER WRITTEN OR ORAL, IS EXPRESSED OR IMPLIED AND HP SPECIFICALLY DISCLAIMS ANY IMPLIED WARRANTIES OR CONDITIONS OF MERCHANTABILITY, SATISFACTORY QUALITY, AND FITNESS FOR A PARTICULAR PURPOSE. Some countries/regions, states or provinces do not allow limitations on the duration of an implied warranty, so the above limitation or exclusion might not apply to you. This warranty gives you specific legal rights and you might also have other rights that vary from country/region to country/region, state to state, or province to province.

HP's limited warranty is valid in any country/region or locality where HP has a support presence for this product and where HP has marketed this product. The level of warranty service you receive may vary according to local standards. HP will not alter form, fit or function of the product to make it operate in a country/region for which it was never intended to function for legal or regulatory reasons.

TO THE EXTENT ALLOWED BY LOCAL LAW, THE REMEDIES IN THIS WARRANTY STATEMENT ARE YOUR SOLE AND EXCLUSIVE REMEDIES. EXCEPT AS INDICATED ABOVE, IN NO EVENT WILL HP OR ITS SUPPLIERS BE LIABLE FOR LOSS OF DATA OR FOR DIRECT, SPECIAL, INCIDENTAL, CONSEQUENTIAL (INCLUDING LOST PROFIT OR DATA), OR OTHER DAMAGE, WHETHER BASED IN CONTRACT, TORT, OR OTHERWISE. Some countries/regions, states or provinces do not allow the exclusion or limitation of incidental or consequential damages, so the above limitation or exclusion may not apply to you.

THE WARRANTY TERMS CONTAINED IN THIS STATEMENT, EXCEPT TO THE EXTENT LAWFULLY PERMITTED, DO NOT EXCLUDE, RESTRICT OR MODIFY AND ARE IN ADDITION TO THE MANDATORY STATUTORY RIGHTS APPLICABLE TO THE SALE OF THIS PRODUCT TO YOU.

HP's Premium Protection Warranty: LaserJet print cartridge limited warranty statement

This HP product is warranted to be free from defects in materials and workmanship.

This warranty does not apply to products that (a) have been refilled, refurbished, remanufactured or tampered with in any way, (b) experience problems resulting from misuse, improper storage, or operation outside of the published environmental specifications for the printer product or (c) exhibit wear from ordinary use.

To obtain warranty service, please return the product to place of purchase (with a written description of the problem and print samples) or contact HP customer support. At HP's option, HP will either replace products that prove to be defective or refund your purchase price.

TO THE EXTENT ALLOWED BY LOCAL LAW, THE ABOVE WARRANTY IS EXCLUSIVE AND NO OTHER WARRANTY OR CONDITION, WHETHER WRITTEN OR ORAL, IS EXPRESSED OR IMPLIED AND HP SPECIFICALLY DISCLAIMS ANY IMPLIED WARRANTIES OR CONDITIONS OF MERCHANTABILITY, SATISFACTORY QUALITY, AND FITNESS FOR A PARTICULAR PURPOSE.

TO THE EXTENT ALLOWED BY LOCAL LAW, IN NO EVENT WILL HP OR ITS SUPPLIERS BE LIABLE FOR DIRECT, SPECIAL, INCIDENTAL, CONSEQUENTIAL (INCLUDING LOST PROFIT OR DATA), OR OTHER DAMAGE, WHETHER BASED IN CONTRACT, TORT, OR OTHERWISE.

THE WARRANTY TERMS CONTAINED IN THIS STATEMENT, EXCEPT TO THE EXTENT LAWFULLY PERMITTED, DO NOT EXCLUDE, RESTRICT OR MODIFY AND ARE IN ADDITION TO THE MANDATORY STATUTORY RIGHTS APPLICABLE TO THE SALE OF THIS PRODUCT TO YOU.

HP Color LaserJet Fuser Kit Limited Warranty Statement

This HP product is warranted to be free from defects in materials and workmanship until the printer provides a low-life indicator on the control panel.

This warranty does not apply to products that (a) have been refurbished, remanufactured or tampered with in any way, (b) experience problems resulting from misuse, improper storage, or operation outside of the published environmental specifications for the printer product or (c) exhibit wear from ordinary use.

To obtain warranty service, please return the product to place of purchase (with a written description of the problem) or contact HP customer support. At HP's option, HP will either replace products that prove to be defective or refund your purchase price.

TO THE EXTENT ALLOWED BY LOCAL LAW, THE ABOVE WARRANTY IS EXCLUSIVE AND NO OTHER WARRANTY OR CONDITION, WHETHER WRITTEN OR ORAL, IS EXPRESSED OR IMPLIED AND HP SPECIFICALLY DISCLAIMS ANY IMPLIED WARRANTIES OR CONDITIONS OF MERCHANTABILITY, SATISFACTORY QUALITY, AND FITNESS FOR A PARTICULAR PURPOSE.

TO THE EXTENT ALLOWED BY LOCAL LAW, IN NO EVENT WILL HP OR ITS SUPPLIERS BE LIABLE FOR DIRECT, SPECIAL, INCIDENTAL, CONSEQUENTIAL (INCLUDING LOST PROFIT OR DATA), OR OTHER DAMAGE, WHETHER BASED IN CONTRACT, TORT, OR OTHERWISE.

THE WARRANTY TERMS CONTAINED IN THIS STATEMENT, EXCEPT TO THE EXTENT LAWFULLY PERMITTED, DO NOT EXCLUDE, RESTRICT OR MODIFY AND ARE IN ADDITION TO THE MANDATORY STATUTORY RIGHTS APPLICABLE TO THE SALE OF THIS PRODUCT TO YOU.

End User License Agreement

PLEASE READ CAREFULLY BEFORE USING THIS SOFTWARE PRODUCT: This End-User License Agreement ("EULA") is a contract between (a) you (either an individual or the entity you represent) and (b) Hewlett-Packard Company ("HP") that governs your use of the software product ("Software"). This EULA does not apply if there is a separate license agreement between you and HP or its suppliers for the Software, including a license agreement in online documentation. The term "Software" may include (i) associated media, (ii) a user guide and other printed materials, and (iii) "online" or electronic documentation (collectively "User Documentation").

RIGHTS IN THE SOFTWARE ARE OFFERED ONLY ON THE CONDITION THAT YOU AGREE TO ALL TERMS AND CONDITIONS OF THIS EULA. BY INSTALLING, COPYING, DOWNLOADING, OR OTHERWISE USING THE SOFTWARE, YOU AGREE TO BE BOUND BY THIS EULA. IF YOU DO NOT ACCEPT THIS EULA, DO NOT INSTALL, DOWNLOAD, OR OTHERWISE USE THE SOFTWARE. IF YOU PURCHASED THE SOFTWARE BUT DO NOT AGREE TO THIS EULA, PLEASE RETURN THE SOFTWARE TO YOUR PLACE OF PURCHASE WITHIN FOURTEEN DAYS FOR A REFUND OF THE PURCHASE PRICE; IF THE SOFTWARE IS INSTALLED ON OR MADE AVAILABLE WITH ANOTHER HP PRODUCT, YOU MAY RETURN THE ENTIRE UNUSED PRODUCT.

1. THIRD PARTY SOFTWARE. The Software may include, in addition to HP proprietary software ("HP Software"), software under licenses from third parties ("Third Party Software" and "Third Party License"). Any Third Party Software is licensed to you subject to the terms and conditions of the corresponding Third Party License. Generally, the Third Party License is located in a file such as license.txt; you should contact HP support if you cannot find any Third Party License. If the Third Party Licenses include licenses that provide for the availability of source code (such as the GNU General Public License) and the corresponding source code is not included with the Software, then check the product support pages of HP's website (hp.com) to learn how to obtain such source code.

2. LICENSE RIGHTS. You will have the following rights provided you comply with all terms and conditions of this EULA:

a. Use. HP grants you a license to Use one copy of the HP Software. "Use" means installing, copying, storing, loading, executing, displaying, or otherwise using the HP Software. You may not modify the HP Software or disable any licensing or control feature of the HP Software. If this Software is provided by HP for Use with an imaging or printing product (for example, if the Software is a printer driver, firmware, or add-on), the HP Software may only be used with such product ("HP Product"). Additional restrictions on Use may appear in the User Documentation. You may not separate component parts of the HP Software for Use. You do not have the right to distribute the HP Software.

b. Copying. Your right to copy means you may make archival or back-up copies of the HP Software, provided each copy contains all the original HP Software's proprietary notices and is used only for back-up purposes.

3. UPGRADES. To Use HP Software provided by HP as an upgrade, update, or supplement (collectively "Upgrade"), you must first be licensed for the original HP Software identified by HP as eligible for the Upgrade. To the extent the Upgrade supersedes the original HP Software, you may no longer use such HP Software. This EULA applies to each Upgrade unless HP provides other terms with the Upgrade. In case of a conflict between this EULA and such other terms, the other terms will prevail.

4. TRANSFER.

a. Third Party Transfer. The initial end user of the HP Software may make a one-time transfer of the HP Software to another end user. Any transfer will include all component parts, media, User Documentation, this EULA, and if applicable, the Certificate of Authenticity. The transfer may not be an indirect transfer, such as a consignment. Prior to the transfer, the end user receiving the transferred

Software will agree to this EULA. Upon transfer of the HP Software, your license is automatically terminated.

b. Restrictions. You may not rent, lease or lend the HP Software or Use the HP Software for commercial timesharing or bureau use. You may not sublicense, assign or otherwise transfer the HP Software except as expressly provided in this EULA.

5. PROPRIETARY RIGHTS. All intellectual property rights in the Software and User Documentation are owned by HP or its suppliers and are protected by law, including applicable copyright, trade secret, patent, and trademark laws. You will not remove any product identification, copyright notice, or proprietary restriction from the Software.

6. LIMITATION ON REVERSE ENGINEERING. You may not reverse engineer, decompile, or disassemble the HP Software, except and only to the extent that the right to do so is allowed under applicable law.

7. CONSENT TO USE OF DATA. HP and its affiliates may collect and use technical information you provide in relation to (i) your Use of the Software or the HP Product, or (ii) the provision of support services related to the Software or the HP Product. All such information will be subject to HP's privacy policy. HP will not use such information in a form that personally identifies you except to the extent necessary to enhance your Use or provide support services.

8. LIMITATION OF LIABILITY. Notwithstanding any damages that you might incur, the entire liability of HP and its suppliers under this EULA and your exclusive remedy under this EULA will be limited to the greater of the amount actually paid by you for the Product or U.S. $5.00. TO THE MAXIMUM EXTENT PERMITTED BY APPLICABLE LAW, IN NO EVENT WILL HP OR ITS SUPPLIERS BE LIABLE FOR ANY SPECIAL, INCIDENTAL, INDIRECT, OR CONSEQUENTIAL DAMAGES (INCLUDING DAMAGES FOR LOST PROFITS, LOST DATA, BUSINESS INTERRUPTION, PERSONAL INJURY, OR LOSS OF PRIVACY) RELATED IN ANY WAY TO THE USE OF OR INABILITY TO USE THE SOFTWARE, EVEN IF HP OR ANY SUPPLIER HAS BEEN ADVISED OF THE POSSIBILITY OF SUCH DAMAGES AND EVEN IF THE ABOVE REMEDY FAILS OF ITS ESSENTIAL PURPOSE. Some states or other jurisdictions do not allow the exclusion or limitation of incidental or consequential damages, so the above limitation or exclusion may not apply to you.

9. U.S. GOVERNMENT CUSTOMERS. If you are a U.S. Government entity, then consistent with FAR 12.211 and FAR 12.212, Commercial Computer Software, Computer Software Documentation, and Technical Data for Commercial Items are licensed under the applicable HP commercial license agreement.

10. COMPLIANCE WITH EXPORT LAWS. You will comply with all laws, rules, and regulations (i) applicable to the export or import of the Software, or (ii) restricting the Use of the Software, including any restrictions on nuclear, chemical, or biological weapons proliferation.

11. RESERVATION OF RIGHTS. HP and its suppliers reserve all rights not expressly granted to you in this EULA.

(c) 2007 Hewlett-Packard Development Company, L.P.

Rev. 11/06

Customer self-repair warranty service

HP products are designed with many Customer Self Repair (CSR) parts to minimize repair time and allow for greater flexibility in performing defective parts replacement. If during the diagnosis period, HP identifies that the repair can be accomplished by the use of a CSR part, HP will ship that part directly to you for replacement. There are two categories of CSR parts: 1) Parts for which customer self repair is mandatory. If you request HP to replace these parts, you will be charged for the travel and labor costs of this service. 2) Parts for which customer self repair is optional. These parts are also designed for Customer Self Repair. If, however, you require that HP replace them for you, this may be done at no additional charge under the type of warranty service designated for your product.

Based on availability and where geography permits, CSR parts will be shipped for next business day delivery. Same-day or four-hour delivery may be offered at an additional charge where geography permits. If assistance is required, you can call the HP Technical Support Center and a technician will help you over the phone. HP specifies in the materials shipped with a replacement CSR part whether a defective part must be returned to HP. In cases where it is required to return the defective part to HP, you must ship the defective part back to HP within a defined period of time, normally five (5) business days. The defective part must be returned with the associated documentation in the provided shipping material. Failure to return the defective part may result in HP billing you for the replacement. With a customer self repair, HP will pay all shipping and part return costs and determine the courier/carrier to be used.

Customer support

Get telephone support, free during your warranty period, for your country/region Have the product name, serial number, date of purchase, and problem description ready.	Country/region phone numbers are on the flyer that was in the box with your product or at www.hp.com/support/.
Get 24-hour Internet support	www.hp.com/support/cljcp4025 or www.hp.com/support/cljcp4525
Get support for products used with a Macintosh computer	www.hp.com/go/macosx
Download software utilities, drivers, and electronic information	www.hp.com/go/cljcp4025_software or www.hp.com/go/cljcp4525_software
Order additional HP service or maintenance agreements	www.hp.com/go/carepack

B Product specifications

- Physical specifications
- Performance specifications
- Electrical specifications
- Acoustic specifications
- Environmental specifications
- Skew specifications

Physical specifications

Table B-1 Product dimensions

Product	Height	Depth	Width	Weight
HP Color LaserJet CP4025n	420 mm (16.5 in)	522 mm (20.6 in)	540 mm (21.3 in)	38.5 kg (84.6 lb)
HP Color LaserJet CP4025dn	420 mm (16.5 in)	522 mm (20.6 in)	540 mm (21.3 in)	38.5 kg (84.6 lb)
HP Color LaserJet CP4525n	420 mm (16.5 in)	522 mm (20.6 in)	540 mm (21.3 in)	38.5 kg (84.6 lb)
HP Color LaserJet CP4525dn	420 mm (16.5 in)	522 mm (20.6 in)	540 mm (21.3 in)	38.5 kg (84.6 lb)
HP Color LaserJet CP4525xh	964 mm (38.0 in)	651 mm (25.7 in)	662 mm (26.1 in)	64.1 kg (141.1 lb)

Table B-2 Product dimensions, with all doors and trays fully opened

Product	Height	Depth	Width
HP Color LaserJet CP4025n	420 mm (16.5 in)	522 mm (20.6 in)	765 mm (30.1 in)
HP Color LaserJet CP4025dn	420 mm (16.5 in)	522 mm (20.6 in)	765 mm (30.1 in)
HP Color LaserJet CP4525n	420 mm (16.5 in)	522 mm (20.6 in)	765 mm (30.1 in)
HP Color LaserJet CP4525dn	420 mm (16.5 in)	522 mm (20.6 in)	765 mm (30.1 in)
HP Color LaserJet CP4525xh	964 mm (38.0 in)	651 mm (25.7 in)	866 mm (34.1 in)

Performance specifications

Print speed	• HP Color LaserJet CP4525: prints up to 42 pages per minute (ppm) on letter-size paper and 40 ppm on A4-size paper • HP Color LaserJet CP4025: prints up to 35 pages per minute (ppm) on letter-size paper and A4-size paper • As quick as 12 seconds to print the first page
Resolution	• 600 dots per inch (dpi) with Image Resolution Enhancement technology 3600 for optimum overall imaging • 1200 x 600 dpi for detailed line work and small text

Electrical specifications

WARNING! Power requirements are based on the country/region where the product is sold. Do not convert operating voltages. This can damage the product and void the product warranty.

NOTE: This product has a Energy Star Typical Electricity Consumption (TEC) rating of 6.485 kw-hr/week.

Table B-3 Power requirements

Specification	110-volt models	220-volt models
Power requirements	100 to 127 volts (± 10%) 50/60 Hz (± 2 Hz)	220 to 240 volts (± 10%) 50/60 Hz (± 2 Hz)
Rated current	8.5 Amps	4.5 Amps

Table B-4 Power consumption (average, in watts)[1246]

Product model	Printing	Ready	Sleep	Off
HP Color LaserJet CP4525 model	740 W	72 W	19 W	0.3 W
HP Color LaserJet CP4025 model				

1 Values subject to change. See www.hp.com/go/cljcp4025_regulatory or www.hp.com/go/cljcp4525_regulatory for current information.

2 Power numbers are the highest values measured using all standard voltages.

3 Default time from Ready mode to Sleep = 30 minutes.

4 Heat dissipation in Ready mode = 204.8 BTU/hour.

6 HP Color LaserJet CP4525 speed is 30 ppm Letter size.

Acoustic specifications

Table B-5 HP Color LaserJet Enterprise CP4020-CP4520 Series[13]

Sound power level	Declared per ISO 9296
Printing	L_{WAd}= 6.9 Bels (A) [69 dB(A)]
Ready	L_{WAd}= 5.0 Bels (A) [50 dB(A)]
Sound pressure level - bystander position	**Declared per ISO 9296**
Printing	L_{pAm}=54 dB (A)
Ready	L_{pAm}=35 dB (A)

1 Values are based on preliminary data. See www.hp.com/go/cljcp4025_regulatory or www.hp.com/go/cljcp4525_regulatory for current information.

3 Configuration tested: HP Color LaserJet CP4525 printer printing on A4-size paper in simplex mode

Environmental specifications

Environmental condition	Recommended	Allowed
Temperature (product and print cartridge)	17° to 27°C (62.6° to 80.6°F)	10° to 30°C (50° to 86°F)
Relative humidity	30% to 70% relative humidity (RH)	10% to 80% RH
Altitude	N/A	0 m (0 ft) to 3000 m (9842 ft)

Skew specifications

Table B-6 Media registration and image placement accuracy

	Cut sheet simplex and automatic duplex[1]	Envelopes and postcards
Skew - vertical	≤ 1.5 mm / 260 mm[2]	≤ 3.3 mm / 220 mm
First line / leading edge position	5.0 mm ± 2.0 mm	10.0 mm ± 3.0 mm
Left margin accuracy	5.0 mm ± 2.0 mm	10 mm ± 2.5 mm
Parallelism	≤ 0.75%	N/A
Image or text stretching - vertical	≤ 1.0 %	N/A
Image or text stretching - horizontal	≤ 1.0 %	N/A
Duplex registration - vertical, horizontal	≤ 2.0 mm	N/A

1 Xerox 4200 (#20) should be used for measurement.

2 Performance for 4x6 media fed from Tray 3 using adapter is 1.0 mm / 130 mm

C Regulatory information

- FCC regulations
- Environmental product stewardship program
- Declaration of Conformity
- Safety statements

FCC regulations

This equipment has been tested and found to comply with the limits for a Class A digital device, pursuant to Part 15 of the FCC rules. These limits are designed to provide reasonable protection against harmful interference in a residential installation. This equipment generates, uses, and can radiate radio frequency energy, and if not installed and used in accordance with the instruction manual, may cause harmful interference to radio communications. Operation of this equipment in a residential area is likely to cause harmful interference in which case the user will be required to correct the interference at his own expense.

NOTE: Any changes or modifications to the printer that are not expressly approved by HP could void the user's authority to operate this equipment.

Use of a shielded interface cable is required to comply with the Class A limits of Part 15 of FCC rules.

Environmental product stewardship program

Protecting the environment

Hewlett-Packard Company is committed to providing quality products in an environmentally sound manner. This product has been designed with several attributes to minimize impacts on our environment.

Ozone production

This product generates no appreciable ozone gas (O_3).

Power consumption

Power usage drops significantly while in Ready and Sleep mode, which saves natural resources and saves money without affecting the high performance of this product. To determine the ENERGY STAR® qualification status for this product, see the Product Data Sheet or Specifications Sheet. Qualified products are also listed at:

www.hp.com/go/energystar

Toner consumption

EconoMode uses less toner, which might extend the life of the print cartridge.

Paper use

This product's optional automatic duplex feature (two-sided printing) and N-up printing (multiple pages printed on one page) capability can reduce paper usage and the resulting demands on natural resources.

Plastics

Plastic parts over 25 grams are marked according to international standards that enhance the ability to identify plastics for recycling purposes at the end of the product's life.

HP LaserJet print supplies

It's easy to return and recycle your HP LaserJet print cartridges after use—free of charge—with HP Planet Partners. Multilingual program information and instructions are included in every new HP LaserJet print cartridge and supplies package. You help reduce the toll on the environment further when you return multiple cartridges together rather than separately.

HP is committed to providing inventive, high-quality products and services that are environmentally sound, from product design and manufacturing to distribution, customer use and recycling. When you participate in the HP Planet Partners program, we ensure your HP LaserJet print cartridges are recycled properly, processing them to recover plastics and metals for new products and diverting millions of tons of waste from landfills. Since this cartridge is being recycled and used in new materials, it will not be returned to you. Thank you for being environmentally responsible!

NOTE: Use the return label to return original HP LaserJet print cartridges only. Please do not use this label for HP inkjet cartridges, non-HP cartridges, refilled or remanufactured cartridges or warranty returns. For information about recycling your HP inkjet cartridges please go to http://www.hp.com/recycle.

Return and recycling instructions

United States and Puerto Rico

The enclosed label in the HP LaserJet toner cartridge box is for the return and recycling of one or more HP LaserJet print cartridges after use. Please follow the applicable instructions below.

Multiple returns (more than one cartridge)

1. Package each HP LaserJet print cartridge in its original box and bag.
2. Tape the boxes together using strapping or packaging tape. The package can weigh up to 31 kg (70 lb).
3. Use a single pre-paid shipping label.

OR

1. Use your own suitable box, or request a free bulk collection box from www.hp.com/recycle or 1-800-340-2445 (holds up to 31 kg (70 lb) of HP LaserJet print cartridges).
2. Use a single pre-paid shipping label.

Single returns

1. Package the HP LaserJet print cartridge in its original bag and box.
2. Place the shipping label on the front of the box.

Shipping

For all HP LaserJet print cartridge recycling returns, give the package to UPS during your next delivery or pickup, or take it to an authorized UPS drop-off center. For the location of your local UPS drop-off center, call 1-800-PICKUPS or visit www.ups.com. If you are returning via USPS label, give the package to a U.S. Postal Service carrier or drop off at a U.S. Postal Service Office. For more information, or to order additional labels or boxes for bulk returns, visit www.hp.com/recycle or call 1-800-340-2445. Requested UPS pickup will be charged normal pickup rates. Information subject to change without notice.

Residents of Alaska and Hawaii

Do not use the UPS label. Call 1-800-340-2445 for information and instructions. The U.S. Postal Service provides no-cost cartridge return transportation services under an arrangement with HP for Alaska and Hawaii.

Non-U.S. returns

To participate in HP Planet Partners return and recycling program, just follow the simple directions in the recycling guide (found inside the packaging of your new product supply item) or visit www.hp.com/recycle. Select your country/region for information on how to return your HP LaserJet printing supplies.

Paper

This product is capable of using recycled papers when the paper meets the guidelines outlined in the *HP LaserJet Printer Family Print Media Guide*. This product is suitable for the use of recycled paper according to EN12281:2002.

Material restrictions

This HP product does not contain added mercury.

This HP product contains a battery that might require special handling at end-of-life. The batteries contained in or supplied by Hewlett-Packard for this product include the following:

HP Color LaserJet Enterprise CP4020-CP4520 Series	
Type	Carbon monofluoride lithium
Weight	0.8 g
Location	On formatter board
User-removable	No

廢電池請回收

For recycling information, you can go to www.hp.com/recycle, or contact your local authorities or the Electronics Industries Alliance: www.eiae.org.

Disposal of waste equipment by users in private households in the European Union

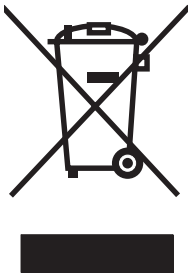

This symbol on the product or on its packaging indicates that this product must not be disposed of with your other household waste. Instead, it is your responsibility to dispose of your waste equipment by handing it over to a designated collection point for the recycling of waste electrical and electronic equipment. The separate collection and recycling of your waste equipment at the time of disposal will help to conserve natural resources and ensure that it is recycled in a manner that protects human health and the environment. For more information about where you can drop off your waste equipment for recycling, please contact your local city office, your household waste disposal service or the shop where you purchased the product.

Chemical substances

HP is committed to providing our customers with information about the chemical substances in our products as needed to comply with legal requirements such as REACH (Regulation EC No 1907/2006 of the European Parliament and the Council). A chemical information report for this product can be found at: www.hp.com/go/reach.

Material Safety Data Sheet (MSDS)

Material Safety Data Sheets (MSDS) for supplies containing chemical substances (for example, toner) can be obtained by accessing the HP Web site at www.hp.com/go/msds or www.hp.com/hpinfo/community/environment/productinfo/safety.

For more information

To obtain information about these environmental topics:

- Product environmental profile sheet for this and many related HP products
- HP's commitment to the environment
- HP's environmental management system
- HP's end-of-life product return and recycling program
- Material Safety Data Sheets

Visit www.hp.com/go/environment or www.hp.com/hpinfo/globalcitizenship/environment.

Declaration of Conformity

Declaration of Conformity

according to ISO/IEC 17050–1 and EN 17050–1, DoC#: BOISB-0806-00-rel.1.0

Manufacturer's Name:	Hewlett-Packard Company
Manufacturer's Address:	11311 Chinden Boulevard, Boise, Idaho 83714-1021, USA

declares that the product

Product Name:	HP Color LaserJet CP4525/CP4025 series
Regulatory Model Number:[2)]	BOISB-0806-00
	Including: CE423A — 3 x 500-Sheet Paper Tray
	CE422A — 500-Sheet Paper Tray
Product Options:	ALL
	Print Cartridges: CE260A, CE260X, CE261A, CE262A, CE263A

conforms to the following Product Specifications:

Safety:	IEC 60950-1:2001 / EN60950-1: 2001 + A11 IEC 60825-1:1993 +A1 +A2 / EN 60825-1:1994 +A1 +A2 (Class 1 Laser/LED Product) GB4943-2001
EMC:	CISPR 22:2005 / EN 55022:2006 – Class A[1)3)] EN 61000-3-2:2006 EN 61000-3-3:1995 + A1 + A2 EN 55024:1998 +A1 + A2 FCC Title 47 CFR, Part 15 Class A / ICES-003, Issue 4 GB9254-1998, GB17625.1–2003

Supplementary Information:

The product herewith complies with the requirements of the EMC Directive 2004/108/EC and the Low Voltage Directive 2006/95/EC, and carries the CE-Marking CE accordingly.

This Device complies with Part 15 of the FCC Rules. Operation is subject to the following two Conditions: (1) this device may not cause harmful interference, and (2) this device must accept any interference received, including interference that may cause undesired operation.

1) The product was tested in a typical configuration with Hewlett-Packard Personal Computer Systems.

2) For regulatory purposes, this product is assigned a Regulatory model number. This number should not be confused with the product name or the product number(s).

3) The product meets the requirements of EN55022 & CNS13438 Class A in which case the following applies: “Warning - This is a class A product. In a domestic environment this product may cause radio interference in which case the user may be required to take adequate measures.”

Boise, Idaho , USA

October 2009

For regulatory topics only:

European Contact:	Your Local Hewlett-Packard Sales and Service Office or Hewlett-Packard GmbH, Department HQ-TRE / Standards Europe, Herrenberger Straße 140, D-71034 Böblingen, Germany, (FAX: +49-7031-14-3143), http://www.hp.com/go/certificates
USA Contact:	Product Regulations Manager, Hewlett-Packard Company, PO Box 15, Mail Stop 160, Boise, Idaho 83707-0015, USA, (Phone: 208-396-6000)

Safety statements

Laser safety

The Center for Devices and Radiological Health (CDRH) of the U.S. Food and Drug Administration has implemented regulations for laser products manufactured since August 1, 1976. Compliance is mandatory for products marketed in the United States. The device is certified as a “Class 1” laser product under the U.S. Department of Health and Human Services (DHHS) Radiation Performance Standard according to the Radiation Control for Health and Safety Act of 1968. Since radiation emitted inside the device is completely confined within protective housings and external covers, the laser beam cannot escape during any phase of normal user operation.

⚠ **WARNING!** Using controls, making adjustments, or performing procedures other than those specified in this user guide may result in exposure to hazardous radiation.

Canadian DOC regulations

Complies with Canadian EMC Class A requirements.

« Conforme à la classe A des normes canadiennes de compatibilité électromagnétiques. « CEM ». »

VCCI statement (Japan)

この装置は、クラスA情報技術装置です。この装置を家庭環境で使用すると電波妨害を引き起こすことがあります。この場合には使用者は適切な対策を講ずるよう要求されることがあります。

VCCI-A

Power cord instructions

Make sure your power source is adequate for the product voltage rating. The voltage rating is on the product label. The product uses either 100-127 Vac or 220-240 Vac and 50/60 Hz.

Connect the power cord between the product and a grounded AC outlet.

△ **CAUTION:** To prevent damage to the product, use only the power cord that is provided with the product.

Power cord statement (Japan)

製品には、同梱された電源コードをお使い下さい。
同梱された電源コードは、他の製品では使用出来ません。

EMC statement (China)

此为A级产品，在生活环境中，该产品可能会造成无线电干扰。在这种情况下，可能需要用户对其干扰采取切实可行的措施。

EMC statement (Korea)

A급 기기 (업무용 방송통신기기)	이 기기는 업무용(A급)으로 전자파적합등록을 한 기기이오니 판매자 또는 사용자는 이점을 주의하시기 바라며, 가정 외의 지역에서 사용하는 것을 목적으로 합니다.

EMI statement (Taiwan)

警告使用者： 這是甲類的資訊產品，在居住的環境中使用時，可能會造成射頻干擾，在這種情況下，使用者會被要求採取某些適當的對策。

Laser statement for Finland

Luokan 1 laserlaite

Klass 1 Laser Apparat

HP Color LaserJet CP4025n, CP4025dn, CP4525n, CP4525dn, CP4525xh, laserkirjoitin on käyttäjän kannalta turvallinen luokan 1 laserlaite. Normaalissa käytössä kirjoittimen suojakotelointi estää lasersäteen pääsyn laitteen ulkopuolelle. Laitteen turvallisuusluokka on määritetty standardin EN 60825-1 (1994) mukaisesti.

VAROITUS !

Laitteen käyttäminen muulla kuin käyttöohjeessa mainitulla tavalla saattaa altistaa käyttäjän turvallisuusluokan 1 ylittävälle näkymättömälle lasersäteilylle.

VARNING !

Om apparaten används på annat sätt än i bruksanvisning specificerats, kan användaren utsättas för osynlig laserstrålning, som överskrider gränsen för laserklass 1.

HUOLTO

HP Color LaserJet CP4025n, CP4025dn, CP4525n, CP4525dn, CP4525xh - kirjoittimen sisällä ei ole käyttäjän huollettavissa olevia kohteita. Laitteen saa avata ja huoltaa ainoastaan sen huoltamiseen koulutettu henkilö. Tällaiseksi huoltotoimenpiteeksi ei katsota väriainekasetin vaihtamista, paperiradan puhdistusta tai muita käyttäjän käsikirjassa lueteltuja, käyttäjän tehtäväksi tarkoitettuja ylläpitotoimia, jotka voidaan suorittaa ilman erikoistyökaluja.

VARO !

Mikäli kirjoittimen suojakotelo avataan, olet alttiina näkymättömällelasersäteilylle laitteen ollessa toiminnassa. Älä katso säteeseen.

VARNING !

Om laserprinterns skyddshölje öppnas då apparaten är i funktion, utsättas användaren för osynlig laserstrålning. Betrakta ej strålen. Tiedot laitteessa käytettävän laserdiodin säteilyominaisuuksista: Aallonpituus 775-795 nm Teho 5 m W Luokan 3B laser.

GS statement (Germany)

Das Gerät ist nicht für die Benutzung im unmittelbaren Gesichtsfeld am Bildschirmarbeitsplatz vorgesehen. Um störende Reflexionen am Bildschirmarbeitsplatz zu vermeiden, darf dieses Produkt nicht im unmittelbaren Gesichtsfeld platziert werden.

Substances Table (China)

有毒有害物质表

根据中国电子信息产品污染控制管理办法的要求而出台

部件名称	有毒有害物质和元素					
	铅 (Pb)	汞 (Hg)	镉 (Cd)	六价铬 (Cr(VI))	多溴联苯 (PBB)	多溴二苯醚 (PBDE)
打印引擎	X	0	X	0	0	0
控制面板	0	0	0	0	0	0
塑料外壳	0	0	0	0	0	0
格式化板组件	X	0	0	0	0	0
碳粉盒	X	0	0	0	0	0

3685

0：表示在此部件所用的所有同类材料中，所含的此有毒或有害物质均低于 SJ/T11363-2006 的限制要求。
X：表示在此部件所用的所有同类材料中，至少一种所含的此有毒或有害物质高于 SJ/T11363-2006 的限制要求。

注：引用的“环保使用期限”是根据在正常温度和湿度条件下操作使用产品而确定的。

Restriction on Hazardous Substances statement (Turkey)

Türkiye Cumhuriyeti: EEE Yönetmeliğine Uygundur

Index

Symbols/Numerics

500-sheet paper and heavy media tray
  specifications, physical 501

A

AC to DC conversion 12
accessories
  ordering 426
  part numbers 427
  screws 430
accessories installed, information 311
acoustic specifications 503
after-service checklist 70
AppleTalk information 310

B

bands, troubleshooting 411
batteries included 509
beam-detect (BD) failure 19
bias generation
  high-voltage power supply xvii
black-only printing mode
  developing roller state 30
  primary transfer roller state 32
blank pages
  troubleshooting 417
blank pages, troubleshooting 410
bootloader password, clear 420
both sides, printing on
  Show Me How menu 314
buffer overflow errors 346

C

cabinet/stand
  specifications, physical 501
cable, USB
  part number 427
cables
  part numbers 427
  USB, troubleshooting 417
calibrate the product 187
calibration
  information, printed 305
  reset by NVRAM initialization 423
Canadian DOC regulations 512
cartridges
  recycling 507
  removing 70
  warranty 495
cartridges, print
  error messages 362
  part numbers 427
cassette
  lift operation 43, 63
  paper-level detection 43
  paper-presence detection 43
  pickup assembly (optional paper feeder), removing 226
  pickup operations 41
  presence detection 42, 62
  tray 2, removing 70
  tray 3, removing 70
  See also trays
cautions iii
characters, troubleshooting 414
checklists
  after-service 70
  preservice 70
chosen personality not available 358
circuit diagrams
  fuser temperature-control 15
  general 295
  high-voltage power supply 10
  low-voltage power supply 12
cleaning
  product 416
cleaning page
  printing 306
clock
  error message 346
clutches
  DC controller 6
cold reset
  product 424
color
  calibration 34
  diagnostic test 311
  disengagement for black-only printing 30
  misregistration control 35
  page count, reset 420
  primary transfer roller state 32
  troubleshooting 305, 413
components
  cover, locations 284
  DC controller 5
  diagnostic tests 274
  diagrams of 277
  duplexing unit 52
  engine-control system 4
  fuser xvii
  image formation, use during 21
  intermediate transfer belt (ITB) 31
  major, locations xxviii
  motor, fan, and roller locations xxviii
  paper feeder xvii
  paper feeder (1 x 500-sheet) xxviii
  paper feeder (3 x 500-sheet) xxviii

PCA locations xxviii
pickup, feed, and delivery 37
print cartridge 28
protection for 13, 15
configuration page 242
configuration pages
information 311
printing 307
configure device menu 321
connectors
controller PCA (optional paper feeder) 283
DC controller PCA 281, xxviii
control panel
cleaning page, printing 416
I/O menu 334
menus 314
messages, alphabetical list xvii
messages, numerical list 345
messages, types of 345
Show Me How menu 314
control-panel assembly
removing 95
control-panel menus
manage supplies 318
retrieve job 314
controller (optional paper feeder)
PCA (optional paper feeder), removing 232
PCA, connectors 283
conventions, document iii
cooling
areas and fans xvii
copying
quality, troubleshooting 410
counts
color cycle 420
mono cycle 420
page, reset 420
print engine maintenance 311
refurbish cycle 421
refurbish page 421
reset after replacing formatter 420
reset by NVRAM initialization 423
See also pages counts
covers
control-panel assembly, removing 95
front door (optional paper feeder), removing 216
front-door assembly, removing 95
front-top, removing 95
identification and location xxiii
left cover (optional paper feeder), removing 222
left, removing 95
locations 284
power-supply cover, removing 95
rear cover (optional paper feeder), removing 218
rear, removing 95
rear-right cover (optional paper feeder), removing 225
rear-top, removing 95
right cover (optional paper feeder), removing 224
right door (optional paper feeder), removing 216
right-door assembly, removing 95
right-front cover (optional paper feeder), removing 219
right-front, removing 95
right-rear, removing 95
upper-left cover, removing 95
creases, troubleshooting 415
crooked pages
troubleshooting 414
current-detection protection circuit 16
customer self repair, part numbers 428
customer support
online 500

D

dark image, troubleshooting 410
date
codes for firmware 311
manufacture 309
product first used 422
DC controller
clutches 6
components 5
fans 9
motors 8
PCA and tray, removing 155
PCA only, removing 155
PCA, connectors 281, xxviii
sensors 7
solenoids 5
switches 6
temperature controls 15
voltage detection 13
DC motors xvii
DC voltages converted from AC 12
Declaration of Conformity 511
defeating
front-door logic switch 269
front-door safety switch 268
interlocks 243
right-door logic switch 270
right-door safety switch 269
defects, repeating 312
delivery assembly
removing 145
demo page 242
density control 36
development process 25
DHCP 335
diagnostics
component 274
engine 243
LED 242
networks 338
page, printing 305
See also tests; troubleshooting
diagnostics menu 342
diagrams
components 277
DIMM
memory, removing 81
disk initialization 423
disposal, end-of-life 509
DLC/LLC 337
DLC/LLC information 310
DNS settings 336
document conventions iii
doors. *See* covers
double-sided printing (duplexing)
Show Me How menu 314

drive circuit
power-supply frequency range 17
drum cleaning 28
duplex printing (double-sided)
Show Me How menu 314
duplexer
specifications, physical 501
duplexing unit
components 52
duplex-drive assembly, removing 151
jam causes 397
motors 8
print operation 53
See also pickup, feed, and delivery

E

EIO cards
part number 427
reset by NVRAM initialization 423
electrical specifications 502
electrostatic discharge (ESD) 69
embedded protocol page 310
end-of-life disposal 509
energy specifications 502
engine
diagnostics 243
test page 240
engine-control system
components 4
Enhanced I/O (EIO) card
buffer overflow 346
settings 334
Enhanced I/O card
part number 427
envelopes
jams 405
environment, specifications 503
Environmental Product Stewardship Program 507
error messages
alphabetical list xvii
event log, listed numerically 378
numerical list 345
types of 345
ESD (electrostatic discharge) 69
European Union, waste disposal 509
event log
clear 377
information 311
messages, listed numerically 378
reset by NVRAM initialization 423
sample 377
view or print 239
exhaust fans xvii

F

faded print 410
failure detection
drive circuit 17
fuser 16
lasers and scanners 19
low-voltage power supply 13
motors xvii
See also jams
fans
cartridge, removing 137
DC controller 9
delivery, removing 143
exhaust xvii
exhaust, removing 169
intake xvii
locations xxviii
Power-supply fan, removing 152
FCC regulations 506
feed speed control 48
feed, paper. *See* pickup, feed, and delivery
Finnish laser safety statement 513
firmware
date codes 311
version information 309
firmware, downloading new 424
flowcharts
troubleshooting 239
formatter
operations 2
PCA, removing 78
resets after replacing 420
formatter lights 242
fuser
components xvii
control-circuit function 14
discrepancy detection 17
drive assembly, removing 211
error messages 350
failure detection 16
identification 17
jam causes 394
jams 346
life detection 17
motor, removing 200
temperature control 15
See also fusing and delivery unit
fusing and delivery unit
operations 48
See also fuser; pickup, feed, and delivery
fusing process 27

H

halftone control 36
hard disk
initialization 423
hard drive
removing 79
hard drive, removing 79
heartbeat LED 243
heat control for fuser 15
heaters, fuser 14
help
Show Me How menu 314
high-voltage power supply
bias generation xvii
circuits xvii
operations 10
removing, lower 163
removing, upper 196
HP Customer Care 500
HP Easy Printer Care
opening 299
options 299
using 299
HP Jetdirect print server
configuration page 309
lights 242
humidity requirements 503
humidity values, printed 305

I

I/O (input/output) menu 334
I/O menu 334
image placement accuracy xix
image quality issues
  examples and solutions 239
image stabilization controls 35
image-formation process
  development process 25
  drum cleaning 28
  fusing process 27
  ITB cleaning 28
  laser-beam exposure 25
  pre-exposure 24
  primary charging 24
  primary transfer process 26
  secondary transfer process 26
  separation process 27
  steps 23
imaging drums
  color drums disengagement 30
  diagnostic test 244
information menu 317
initial rotation period 3
initializing
  hard disk 423
  NVRAM 423
input trays
  configuring 317
  optional, operations xxii
install cartridge error message 362
installation
  date calculation 422
  verify for optional accessories 307
insufficient memory 346, 362
intake fans xvii
interconnect board (ICB)
  removing 153
interface ports
  locating 280
interlocks
  defeating 243
intermediate transfer belt (ITB)
  components 31
  home position 32
  operations 31
internal clock errors 346
IP address 335
IPv4 information 309
IPv6 information 309
IPV6 settings 336
IPX/SPX information 310
IPX/SPX settings 337
ITB
  motor, removing 202
ITB cleaning 28

J

jams
  clearing 386
  common causes of 383
  detection in paper feeder 64
  detection sensors 55
  diagnostic test for 245
  duplex area 397
  envelopes 405
  fuser 346
  fuser area 394
  lower right door 346
  output bin 346, 394
  recovery 402
  right door 346
  Show Me How menu 314
  Tray 1 346
  Tray 1 and Tray 2 399
  Tray 2 346
  Tray 3 346
  Tray 3, 4, and 5 400
  types detected xvii
Japanese VCCI statement 512
Jetdirect print server
  lights 242

K

Korean EMC statement 513

L

laser safety statements 512, 513
laser-beam exposure 25
laser/scanner
  assembly (C/Bk), removing 190
  assembly (Y/M), removing 186
  failure conditions 19
  operations 18
  protective-glass cleaners (PGCs) 19
last rotation period 3
latent image formation 23
LEDs. *See* lights
left cover, removing 95
license, software 497
lifter assembly (optional paper feeder)
  removing 229
lifter base assembly
  removing 175
lifter-drive assembly
  removing 173
lifter-drive assembly (optional paper feeder)
  removing 230
light print, troubleshooting 410
lights
  formatter 242
  troubleshooting with 242
lines, troubleshooting 411
link speed settings 341
loading
  Show Me How menu 314
log of events
  clear 377
  messages, listed numerically 378
  sample 377
  view or print 239
loop control 49
loose toner, troubleshooting 413
low-voltage power supply
  converted DC voltages xvii
  failure detection 13
  operations 12
  protection for components 13
  removing 157
  safety provided by 13
  stops and interruptions xvii
  See also power supply
lower right door
  jams 346

M

Macintosh
  support 500

main-drive assembly
removing 203
manage supplies menu 318
manual print modes 408
material restrictions 509
Material Safety Data Sheet (MSDS) 510
media
Show Me How menu 314
media registration accuracy xix
media sensor value
Service menu reset 422
memory
information 307
insufficient 346, 362
NVRAM initialization 423
part numbers 427
permanent storage error messages 355
supply errors 345
memory DIMM, removing 81
menu map
description 317
print 236
menus
configure device 321
diagnostics 342
I/O (input/output) 334
information 317
paper handling 317, 318
printing 321
resets 342
system setup 329
menus, control panel
I/O 334
Show Me How 314
menus, control-panel
manage supplies 318
retrieve job 314
mercury-free product 509
messages
alphabetical list xvii
event log, listed numerically 378
numerical list 345
types of 345
model number 309
motor control
paper feeder 59
motors
DC controller 8
developing-disengagement, removing 168
drum motor, removing 199
failure detection xvii
fuser, removing 200
ITB, removing 202
locations xxviii
paper feeder 59
pickup (optional paper feeder), removing 231
pickup, feed, and delivery xvii
pickup, removing 172
residual-toner-feed, removing 133
stepping 8
movement of paper through product. *See* pickup, feed, and delivery
multiple paper feed prevention 43
multipurpose tray. *See* trays

N

networks
diagnostics 338
HP embedded Jetdirect configuration page 309
link speed settings 341
protocols 334
security 334
settings xvii
noise specifications 503
notes iii
Novell/NetWare information 310
NVRAM (nonvolatile memory)
initialization 423
NVRAM errors 355

O

online support 500
operating environment specifications 503
operation sequence xvii
optimize print quality
calibrate the product 187
ordering
part numbers for 427
supplies and accessories 426
output bin
jam causes 394
jams 346
overcurrent or overvoltage protection 13

P

pages
blank 417
not printing 417
printing slowly 417
skewed 414
pages count
from product refurbish date 421
reset 420
reset by NVRAM initialization 423
since last maintenance 311
See also counts
paper
cassette-presence detection 42, 62
default size reset 422
jam detection 64
level detection 43
movement sensors xvii, 55
presence detection 43
Show Me How menu 314
size detection 62
stop in path for testing 273
wrinkled 415
paper detection 47
paper feeder
cassette lift operation 63
component locations xxviii
controller PCA 283
controller PCA, removing 232
diagrams of 1 x 500-sheet xxviii
diagrams of 3 x 500-sheet xxviii
electrical components xvii
feed operations 45
feed speed control 48
front door, removing 216
jam detection 64
left cover, removing 222
lifter assembly, removing 229

lifter-drive assembly, removing 230
motor control 59
multifeed prevention 43
optional 1 x 500-sheet 57
optional 3 x 500-sheet 57
paper detection 47
pickup and feed operation 60
pickup assembly, removing 226
pickup motor assembly, removing 231
rear cover, removing 218
rear-right cover, removing 225
right cover, removing 224
right door, removing 216
right-front cover, removing 219
skew feed prevention 47
See also pickup, feed, and delivery
paper feeders
parts lists and diagrams 468, 470
paper handling menu 317
paper jams
clearing 386
paper path
diagnostic test 245
diagnostic test, manual 259
stop movement for testing 273
paper-path
test, sensors 256
parameters, EP, troubleshooting 305
part numbers
cables 427
fuser 429
memory 427
print cartridges 427
registration unit 429
screws 430
service kits 428
toner collection unit 427
parts 367
parts lists and diagrams
cassettes 2–5 452
covers and doors (optional paper feeder) 470
covers, panels, and doors 432
delivery assembly 462
front door assembly 436
fuser assembly 464
internal components 438, 440, 442, 444, 446, 448, 450
paper feeders 468
paper pickup assembly 454
PCAs 466
registration assembly 458
right door assembly 434
secondary transfer assembly 460
Tray 1 paper pickup assembly 456
using 431
password
bootloader, clear 420
Service menu PIN 420
PCA, locations xxviii
periods of the operation sequence 3
permanent storage errors 355
physical specifications 501
pickup, feed, and delivery
components 37
multipurpose tray pickup 44
overview 37
paper-feed operations 45
paper-feeder pickup and feed 60
pickup-and-feed unit operations 41
See also paper feeder; fusing and delivery unit; duplexing unit
pliers, required 69
port configuration information 309
ports
locating 280
post-service tests 71
power specifications 502
power supply
frequency range for drive circuit 17
troubleshooting 240
See also low-voltage power supply; high-voltage power supply
power-save mode. *See* sleep settings
pre-exposure process 24
pre-troubleshooting checklist 237
preservice checklist 70
pressure-roller pressurization control 51
primary charging process 24
print cartridges
components 28
diagnostic test 244
error conditions 30
error messages 362
operations xxi
part numbers 427
recycling 507
removing 70
warranty 495
print quality
built-in troubleshooting pages 234
calibrate the product 187
color misregistration control 35
image stabilization controls 35
manual print modes 408
test 71
test pages 302
troubleshooting 410
Print Quality menu options 408
printer settings
configure 321
printing
modes, manual 408
period in operation sequence 3
process explained xxi
stop for testing 273
troubleshooting 417
printing menu 321
problem-solving
messages, types of 345
networks 338
product status
HP Easy Printer Care 299
protocols, network 334
Proxy Server settings 337

Q

quality. *See* print quality

R

recycling
  HP printing supplies returns and environmental program 508
reformat product hard disk 423
registration assembly
  removing 128
registration roller
  Service menu reset 422
regulatory statements
  Declaration of Conformity 511
  environmental product stewardship program 507
removing parts
  cartridge fan 137
  cassette feed guide 118
  cautions for 68
  checklists 70
  control-panel assembly 95
  controller PCA (optional paper feeder) 232
  DC controller PCA and tray 155
  DC controller PCA only 155
  delivery assembly 145
  delivery fan 143
  developing-disengagement motor 168
  drum motors 199
  duplex-drive assembly 151
  environmental sensor 137
  exhaust fan 169
  feed and separation rollers 86
  formatter PCA 78
  front door (optional paper feeder) 216
  front-door assembly 95
  front-top cover 95
  fuser 85
  fuser motor 200
  fuser-drive assembly 211
  hard drive 79
  high-voltage power supply lower 163
  high-voltage power supply upper 196
  interconnect board (ICB) 153
  intermediate transfer belt 92
  ITB motor 202
  laser/scanner assembly (C/Bk) 190
  laser/scanner assembly (Y/M) 186
  left cover 95
  left cover (optional paper feeder) 222
  lifter assembly (optional paper feeder) 229
  lifter base assembly 175
  lifter-drive assembly 173
  lifter-drive assembly (optional paper feeder) 230
  low-voltage power supply 157
  main-drive assembly 203
  memory DIMM 81
  pickup assembly (optional paper feeder) 226
  pickup motor 172
  pickup motor (optional paper feeder) 231
  pickup roller (tray 1) 87
  power-supply cover 95
  power-supply fan 152
  print cartridges 70
  rear cover 95
  rear cover (optional paper feeder) 218
  rear-right cover (optional paper feeder) 225
  rear-top cover 95
  registration assembly 128
  registration density (RD) sensor assembly 124
  residual-toner and feed assembly 134
  residual-toner-feed motor 133
  right cover (optional paper feeder) 224
  right door (optional paper feeder) 216
  right-door assembly 95
  right-front cover 95
  right-front cover (optional paper feeder) 219
  right-rear cover 95
  secondary transfer assembly 119
  secondary transfer roller 90
  separation pad (Tray 1) 121
  toner-collection sensor and scanner-thermistor assembly 141
  toner-collection unit 76
  tools, required 69
  tray cassette 70
  tray-pickup assembly 180
  tray-pickup drive assembly 178
  upper-left cover 95
repeating defects, troubleshooting 312
replacing
  parts 68
reset product 424
resets menu 342
resolution
  troubleshooting quality 410
retrieve job menu 314
reverse and feed control, duplexer 52
right door
  jams 346
roller
  feed and separation roller (Trays 2–5), removing 86
  pickup roller (Tray 1), removing 87
rollers
  locations xxviii
  secondary transfer roller, removing 119
  separation pad (Tray 1), removing 121
ruler, repetitive defect 312

S

safety features
  when front door is open 13
safety statements 512, 513
scanner-motor failure 19
screwdrivers, required 69
screws
  part numbers 430
  replacing 68
secondary transfer processes 26
secondary transfer roller, removing 90

security
settings 334
security settings information 309
security slot
locating 280
sensor tests manual
5V laser and 24V interlock and logic switches 267
developer alienation sensor (I) 252
duplex re-pickup sensor (E) 250
front-door switch (M) 257
fuser delivery sensor (D) 249
fuser pressure-release sensor (J) 253
loop sensors (B and C) 248
media sensor (L) 256
new ITB sensor 271
output bin full sensor (F) 251
primary transfer-roller-disengagement sensor (K) 254
right-door switch (N) 258
TOP sensor (A) 247
tray 1 paper present sensor (O) 261
tray 2 paper present sensor (P) 262
tray 2 paper size switches (R) 264
tray 2 paper surface 1 and 2 (Q) 263
tray 3 feed sensor (T) 265
tray 3 paper present (S) 265
tray 3 paper size switches (V) 265
tray 3 paper surface 1 and 2 (U) 265
tray 3, 4, and 5 right door switch 272
tray 4 feed sensor (X) 265
tray 4 paper present (W) 265
tray 4 paper size switches (Z) 266
tray 4 paper surface 1 and 2 (Y) 265
tray 5 feed sensor (b) 266
tray 5 paper present (a) 266
tray 5 paper size switches (d) 266
tray 5 paper surface 1 and 2 (c) 266
sensors
DC controller 7
diagnostic tests 256
environmental, removing 137
jam detection 55
paper feeder 59
pickup, feed, and delivery xvii
registration density (RD) sensor assembly, removing 124
tests, manual 246
toner-collection sensor, removing 141
separation process 27
sequence of operation 3
serial number
reset after replacing formatter 421
reset by NVRAM initialization 423
service
tools, required 69
Service ID
convert to date 422
restore 422
Service menu options 129
Show Me How menu 314
skew-feed prevention 47
skewed pages
troubleshooting 414
Sleep mode
power specifications 502
sleep settings
voltage too high during 13
smeared toner, troubleshooting 414
software
HP Easy Printer Care 299
software license agreement 497
solenoids
DC controller 5
paper feeder 59
pickup, feed, and delivery xvii
solve problems 233
solving
direct-connect problems 418
network problems 418
space requirements 501
specifications
acoustic 503
electrical 502
operating environment 503
physical 501
standby period 3
stapler/stacker
specifications, physical 501
static precautions 69
status
HP Easy Printer Care 299
messages, types of 345
status page 242
stepping motors xvii
stop printing for test 273
storage cabinet
specifications, physical 501
streaks, troubleshooting 411
subvoltage
low-voltage power supply circuit 12
supplies
managing 318
memory errors 345
ordering 426
part numbers 427
recycling 507
supplies status page
description 317
supplies, status
HP Easy Printer Care 299
supply messages
configuring 318
support
online 500
switches
DC controller 6
paper feeder 59, 62
paper-size, diagnostic test 259
pickup, feed, and delivery xvii
system setup menu 329

T

Taiwan EMI statement 513
TCP/IP information 309

TCP/IP settings 334
technical support
online 500
temperature
control for fuser 15
thresholds for fuser components 15, 16
values, printed 305
temperature requirements 503
tests
color band 311
component tests list and descriptions xvii
disable cartridge check 244
engine 240
manual sensor 246
networks 338
paper path 245
paper-path sensors 256
post-service 71
print-quality 71
print/stop 273
special-mode test 259
text, troubleshooting 414
thermistors
fuser 14, 15
open detection 17
thermopiles
fuser 15
thermoswitches
fuser 14, 15
thresholds
power-supply frequency, drive circuit 17
temperature, fuser components 15, 16
timing chart 294
tips iii
toner
image formation, use during 23
loose, troubleshooting 413
patterns for calibration xxi
smeared, troubleshooting 414
toner cartridges. *See* print cartridges
toner collection unit
part number 427
removing 76
tools, required 69
transfer processes 26
tray
pickup assembly, removing 180
pickup drive assembly, removing 178
Tray 1
jams 346
Tray 2
jams 346
Tray 3
jams 346
trays
jam causes 399, 400
multipurpose, pickup operation 44
removing 70
Show Me How menu 314
specifications, physical 501
See also cassette
trays, status
HP Easy Printer Care 299
troubleshooting
blank pages 417
checklist 234, 237
cleaning page for 306
color 305
configuration page 242
configuration pages for 307
control panel messages, numerical 345
demo page 242
direct-connect problems 418
duplexing 406
EP parameters 305
error messages, alphabetical list xvii
error messages, numerical list 345
event log 242
event log, use for 376
event-log messages, numerical list 378
flowchart 239
jams in duplex area 397
jams in fuser area 394
jams in output bin 394
jams in Tray 1 and Tray 2 399
jams in Tray 3, 4, and 5 400
lights, using 242
lines, printed pages 411
network problems 418
pages not printing 417
pages printing slowly 417
power 240
print quality issues 410
process 237
repeating defects 312
reports and tools 242
Show Me How menu 314
skewed pages 414
status page 242
text 414
toner smear 414
transparencies 405
USB cables 417
wrinkles 415
See also diagnostics
two-sided printing
Show Me How menu 314

U

updates, downloading product 424
usage page
description 317
USB port
troubleshooting 417

V

version, hardware firmware 309
vertical lines, troubleshooting 411
voltage detection
DC controller 13
voltage specifications 502

W

waiting period 3
warnings iii
warranty
customer self repair 499
license 497
print cartridges 495
product 494
warranty date information 422
Web sites
customer support 500
Macintosh customer support 500

Material Safety Data Sheet (MSDS) 510
ordering supplies 426
white spots, troubleshooting 411
wrinkles, troubleshooting 415

© 2010 Hewlett-Packard Development Company, L.P.

www.hp.com

CC489-90936